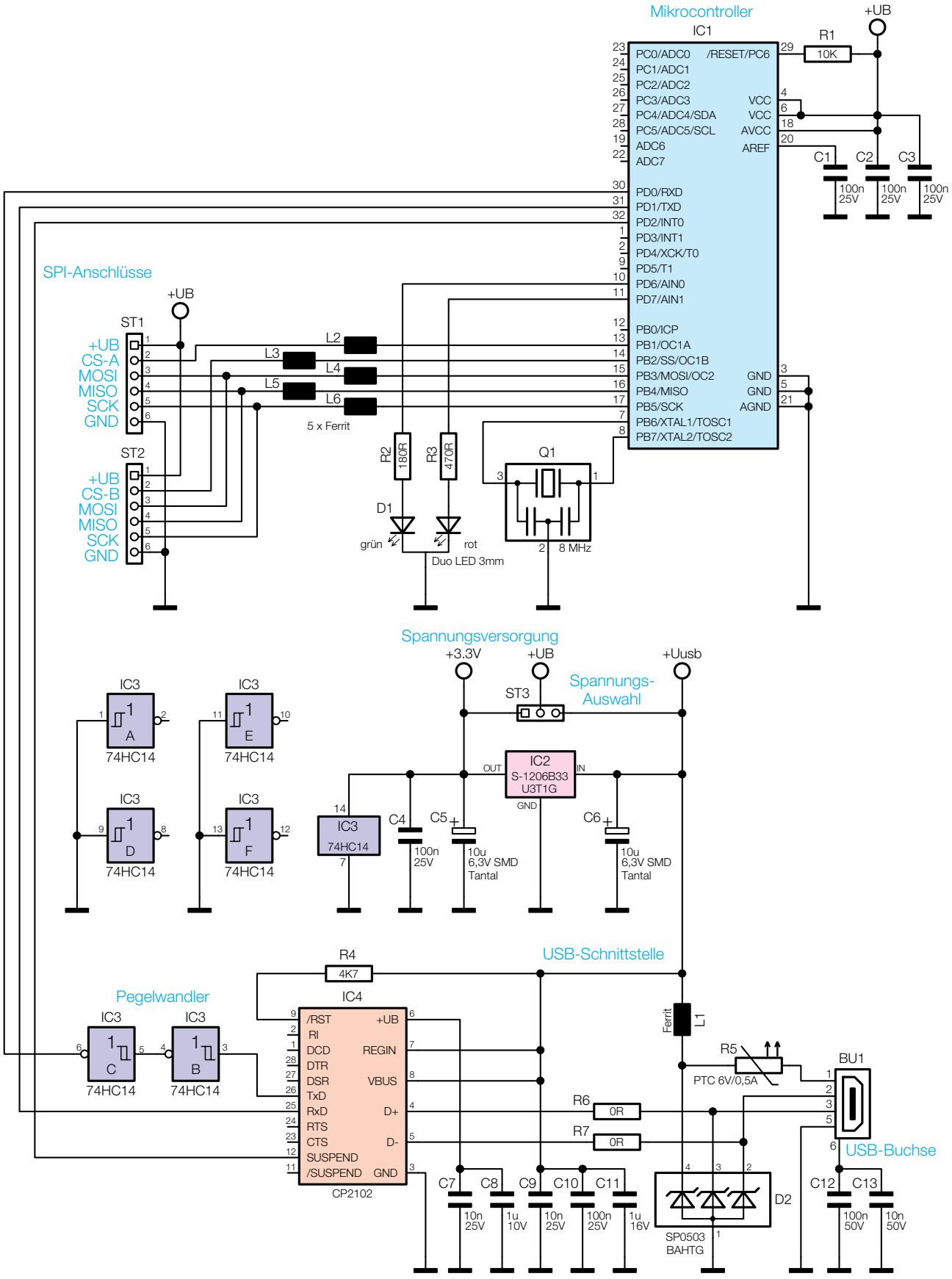
Mikrocontroller
IC1
+UB
R1
10K
PC0/ADC0
PC1/ADC1
PC2/ADC2
PC3/ADC3
PC4/ADC4/SDA
PC5/ADC5/SCL
ADC6
ADC7
/RESET/PC6
VCC
VCC
AVCC
AREF
C1
C2
C3
100n 25V
100n 25V
100n 25V
PD0/RXD
PD1/TXD
PD2/INT0
PD3/INT1
PD4/XCK/T0
PD5/T1
PD6/AIN0
PD7/AIN1
PB0/ICP
PB1/OC1A
PB2/SS/OC1B
PB3/MOSI/OC2
PB4/MISO
PB5/SCK
PB6/XTAL1/TOSC1
PB7/XTAL2/TOSC2
GND
GND
AGND
SPI-Anschlüsse
+UB
ST1
+UB
CS-A
MOSI
MISO
SCK
GND
ST2
+UB
CS-B
MOSI
MISO
SCK
GND
L2
L3
L4
L5
L6
5 x Ferrit
R2
180R
R3
470R
D1
grün
rot
Duo LED 3mm
Q1
8 MHz
Spannungsversorgung
+3.3V
+UB
+Uusb
Spannungs-
Auswahl
ST3
IC3
74HC14
A
E
D
F
IC2
S-1206B33
U3T1G
OUT
IN
GND
C4
100n
25V
C5
10u
6,3V SMD
Tantal
C6
10u
6,3V SMD
Tantal
USB-Schnittstelle
R4
4K7
Pegelwandler
IC3
74HC14
C
B
IC4
/RST
RI
DCD
DTR
DSR
TxD
RxD
RTS
CTS
SUSPEND
/SUSPEND
+UB
REGIN
VBUS
D+
D-
GND
CP2102
Ferrit
L1
R5
PTC 6V/0,5A
BU1
USB-Buchse
R6
0R
R7
0R
D2
SP0503
BAHTG
C7
10n
25V
C8
1u
10V
C9
10n
25V
C10
100n
25V
C11
1u
16V
C12
100n
50V
C13
10n
50V