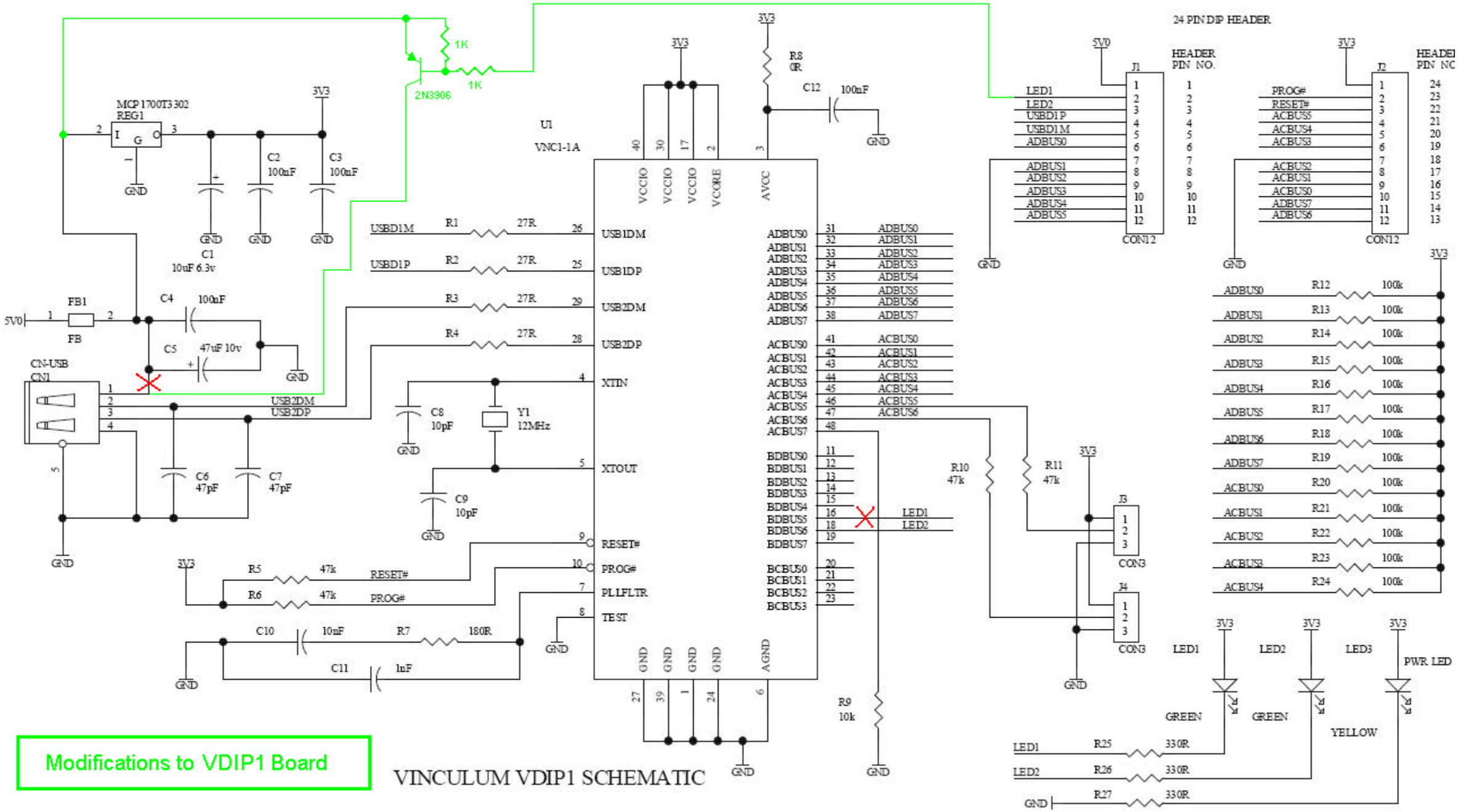
Modifications to VDIP1 Board
VINCULUM VDIP1 SCHEMATIC
U1
VNC1-1A
MCP1700T3302
REG1
2N3906
1K
1K
C1
10uF 6.3v
C2
100nF
C3
100nF
C4
100nF
C5
47uF 10v
FB1
FB
5V0
CN-USB
CN1
USB2DM
USB2DP
C6
47pF
C7
47pF
C8
10pF
C9
10pF
Y1
12MHz
R1
27R
R2
27R
R3
27R
R4
27R
USBD1M
USBD1P
R5
47k
R6
47k
RESET#
PROG#
C10
10nF
R7
180R
C11
1nF
R8
0R
C12
100nF
R9
10k
R10
47k
R11
47k
J1
CON12
J2
CON12
J3
CON3
J4
CON3
24 PIN DIP HEADER
HEADER PIN NO.
LED1
LED2
USBD1P
USBD1M
ADBUS0
ADBUS1
ADBUS2
ADBUS3
ADBUS4
ADBUS5
PROG#
RESET#
ACBUS5
ACBUS4
ACBUS3
ACBUS2
ACBUS1
ACBUS0
ADBUS7
ADBUS6
R12
R13
R14
R15
R16
R17
R18
R19
R20
R21
R22
R23
R24
100k
LED1
LED2
LED3
PWR LED
GREEN
GREEN
YELLOW
R25
R26
R27
330R
3V3
GND