LED LP5086AUWC/C/HA-F

Best.Nr. 120 344

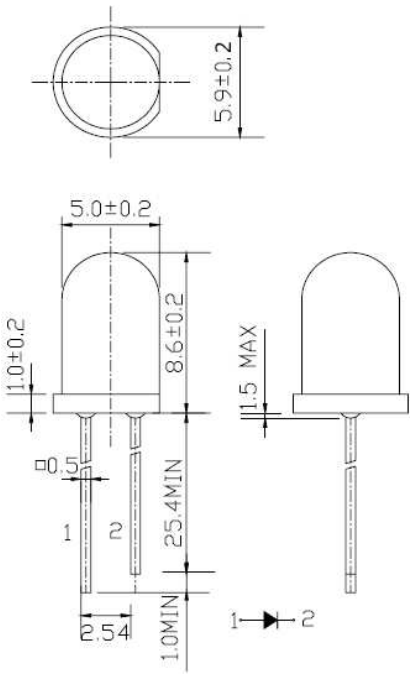

Descriptions

Chip		Lens Color
Material	Emitted Color	
InGaN	White	Water Clear

Absolute Maximum Ratings at Ta 0 25 ℃

Parameter	Symbol	Rating	Unit
Forward Current	IF	30	mA
Operating Temperature	Topr	-40…+80	℃
Storage Temperature	Tstg	-40…+100	℃
Soldering Temperature	Tsol	260 (for 5 Second)	℃
Power Dissipation	Pd	120	mW
Peak Forward Current (Duty 1/10 @ 1 KHz)	IF (Peak)	90	mA
Reverse Voltage	VR	5	V

Electronic Optical Characteristics

Parameter	Symbol	Min.	Typ.	Max.	Unit	Condition
Chromaticity Coordinates	x	-	0,31	-	-	IF = 20 mA
	y	-	0,32	-	-	IF = 20 mA
Luminous Intensity	Iv	4000	5600	-	mcd	IF = 20 mA
Viewing Angle	2Θ1/2	-	20	-	deg	IF = 20 mA
Forward Voltage	VF	-	3,5	4,0	V	IF = 20 mA
Spectrum Radiation Bandwith	Δλ	-	20	-	nm	IF = 20 mA
Reverse Current	IR	-	-	50	µA	VR = 5 V