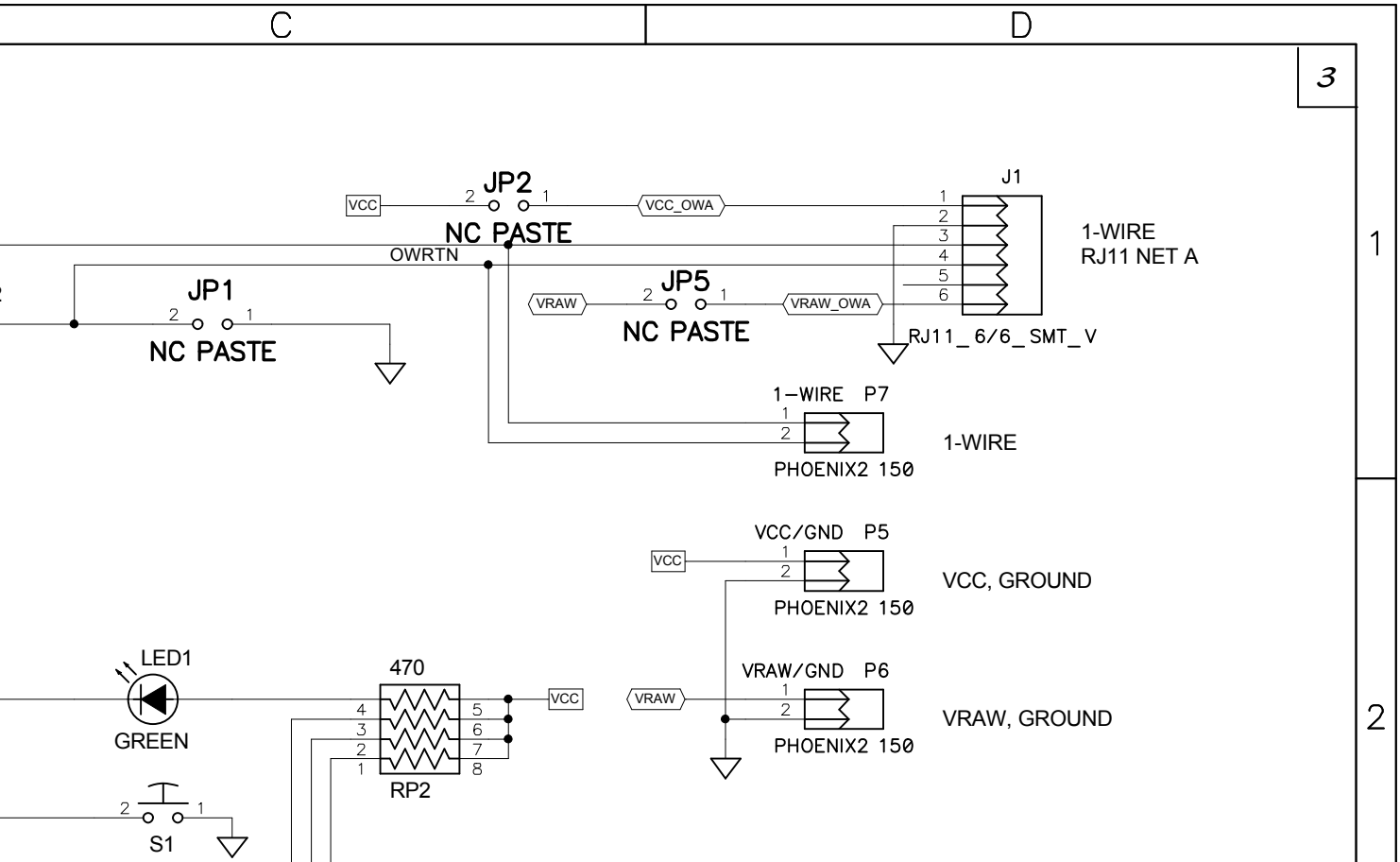
C
D
3
1
2
JP2
VCC
VCC_OWA
NC PASTE
OWRTN
J1
1-WIRE
RJ11 NET A
JP1
NC PASTE
JP5
VRAW
VRAW_OWA
NC PASTE
RJ11_6/6_SMT_V
1-WIRE P7
1-WIRE
PHOENIX2 150
VCC/GND P5
VCC
VCC, GROUND
PHOENIX2 150
LED1
GREEN
470
RP2
VCC
VRAW
VRAW/GND P6
VRAW, GROUND
PHOENIX2 150
S1