update
4-3-84

Tektronix®
COMMITTED TO EXCELLENCE

PLEASE CHECK FOR CHANGE INFORMATION AT THE REAR OF THIS MANUAL.

7D01
LOGIC ANALYZER
(Serial No. B020000 and up)
WITH OPTIONS

INSTRUCTION MANUAL

Tektronix, Inc.
P.O. Box 500
Beaverton, Oregon 97077
070-2206-02
Product Group 57

Serial Number _____

First Printing OCT 1976
Revised OCT 1982

Scans
By
Artek Media

Artek Media
1042 Plummer Cir. SW
Rochester, MN 55902

www.artekmedia.com

"High resolution scans of obsolete technical manuals"

If your looking for a quality scanned technical manual in PDF format please visit our WEB site at www.artekmedia.com or drop us an email at manuals@artekmedia.com and we will be happy to email you a current list of the manuals we have available.

If you don't see the manual you need on the list drop us a line anyway we may still be able to point you to other sources. If you have an existing manual you would like scanned please write for details, This can often be done very reasonably in consideration for adding your manual to our library.

Typically the scans in our manuals are done as follows;

1) Typed text pages are typically scanned in black and white at 300 dpi.
2) Photo pages are typically scanned in gray scale mode at 600 dpi
3) Schematic diagram pages are typically scanned in black and white at 600 dpi unless the original manual had colored high lighting (as is the case for some 70's vintage Tektronix manuals).

If you purchased this manual from us (typically through our Ebay name of ArtekMedia) thank you very much. If you received this from a well-meaning "friend" for free we would appreciate your treating this much like you would "share ware". By that we mean a donation of at least $5-10 per manual is appreciated in recognition of the time (a manual can take as much as 40 hours to reproduce, book, link etc.), energy and quality of effort that went into preserving this manual. Donations via PayPal go to: manuals@artekmedia.com or can be mailed to us the address above.

Thanks

Dave & Lynn Henderson
Artek Media

Copyright © 1976, 1977, 1979 Tektronix, Inc. All rights reserved. Contents of this publication may not be reproduced in any form without the written permission of Tektronix, Inc.

Products of Tektronix, Inc. and its subsidiaries are covered by U.S. and foreign patents and/or pending patents.

TEKTRONIX, TEK, SCOPE-MOBILE, and are registered trademarks of Tektronix, Inc. TELEQUIPMENT is a registered trademark of Tektronix U.K. Limited.

Printed in U.S.A. Specification and price change privileges are reserved.

TABLE OF CONTENTS

PAGE

LIST OF ILLUSTRATIONS ii
LIST OF TABLES ii
SAFETY SUMMARY iii

SECTION 1 GENERAL INFORMATION
INTRODUCTION 1-1
GLOSSARY 1-1
INSTALLATION 1-1
PACKAGING FOR SHIPMENT 1-2
SPECIFICATION 1-3
STANDARD ACCESSORIES 1-9

SECTION 2 OPERATING INSTRUCTIONS
FRONT PANEL CONTROLS, CONNECTORS AND INDICATORS 2-1
DETAILED OPERATING INFORMATION 2-1
AUXILIARY FUNCTIONS 2-1
INTERNAL STRAP SELECTIONS 2-4
SIGNAL CONNECTIONS 2-6
DISPLAYING DATA 2-7
TRIGGERING 2-7
CLOCK QUALIFIER OPERATION 2-8
ASYNCHRONOUS AND SYNCHRONOUS DATA SAMPLING 2-9
OPERATIONAL ANALYSIS 2-10
APPLICATIONS 2-13
INTRODUCTION 2-13
FAULT IDENTIFICATION 2-13
DELAY BY WORDS 2-13
DELAY BY EVENTS 2-14
STATE TABLE AND MAPPING DISPLAYS 2-14
MICROPROCESSOR ANALYSIS 2-16
STORAGE BUFFER ANALYSIS 2-17
FUNCTIONAL CHECK 2-17

WARNING

THE REMAINING PORTION OF THIS TABLE OF CONTENTS LISTS THE SERVICING INSTRUCTIONS. THESE SERVICING INSTRUCTIONS ARE FOR USE BY QUALIFIED PERSONNEL ONLY. TO AVOID ELECTRICAL SHOCK, DO NOT PERFORM ANY SERVICING OTHER THAN THAT CALLED OUT IN THE OPERATING INSTRUCTIONS UNLESS QUALIFIED TO DO SO.

PAGE

SECTION 3 THEORY OF OPERATION
BLOCK DIAGRAM DESCRIPTION 3-1
DETAILED CIRCUIT DESCRIPTION 3-3
FRONT PANEL WIRING 3-3
WORD RECOGNIZER 3-3
MEMORY 3-4
TRIGGER 3-7
TIME BASE 3-9
VERTICAL OUTPUT 3-9
HORIZONTAL OUTPUT 3-10
CURSOR 3-10
POWER SUPPLIES 3-12

SECTION 4 MAINTENANCE
PREVENTIVE MAINTENANCE 4-1
CLEANING 4-1
VISUAL INSPECTION 4-1
LUBRICATION 4-1
SEMICONDUCTOR CHECKS 4-2
TROUBLESHOOTING 4-3
TROUBLESHOOTING EQUIPMENT 4-3
TROUBLESHOOTING TECHNIQUES 4-3
CORRECTIVE MAINTENANCE 4-7
OBTAINING REPLACEMENT PARTS 4-7
SOLDERING TECHNIQUES 4-7
COMPONENT REMOVAL AND REPLACEMENT 4-8
ADJUSTMENT AFTER REPAIR 4-14

SECTION 5 PERFORMANCE CHECK AND ADJUSTMENT
PRELIMINARY INFORMATION 5-1
TEST EQUIPMENT REQUIRED 5-1
PRELIMINARY PROCEDURE 5-3
PERFORMANCE CHECK AND ADJUSTMENT PROCEDURE 5-5

SECTION 6 REPLACEABLE ELECTRICAL PARTS

SECTION 7 INSTRUMENT OPTIONS

SECTION 8 DIAGRAMS AND CIRCUIT BOARD ILLUSTRATIONS

SECTION 9 REPLACEABLE MECHANICAL PARTS

CHANGE INFORMATION

LIST OF ILLUSTRATIONS

FIGURE NO.		PAGE
Frontispiece	7D01 Logic Analyzer	iv
1-1	7D01 Dimensional Drawing	1-8
2-1	Front-panel controls, connectors, and indicators	2-2
2-2	Internal Display Clock Source and Full Display/First Trigger Selectors	2-4
2-3	Internal Signal Selector	2-5
2-4	Pin assignments for Data Out connector J120	2-6
2-5	Suggested methods for terminating data outputs from Data Out connector J120	2-7
2-6	Suggested method for assembling a remote Manual Reset button	2-7
2-7	Typical channel 0 to 15 pretrigger data display	2-8
2-8	Equipment setup and displays for finding a data fault and examining it on an analog display	2-14
2-9	Equipment setup and data display window that has been positioned after a preselected word has occurred 25 times	2-15
2-10	Equipment setup and display window that has been positioned after 10,500 clock pulses have occurred	2-15
2-11	Typical setup for troubleshooting a microprocessor system	2-16
2-12	Typical setup and display for troubleshooting a storage buffer	2-17
3-1	7D01 Block Diagram	3-2
3-2	Equivalent circuit for one channel of P6451 Data Acquisition Probe	3-3
3-3	Truth Table for Store/Display Clock Gate	3-5
3-4	Latch Clock timing for 4-channel operation	3-5
3-5	Latch Clock timing for 8-channel operation	3-6
3-6	Memory Selector timing for 4-channel operation (display time only)	3-6
3-7	Memory Selector timing for 8-channel operation (display time only)	3-6
3-8	Binary output of U628 versus channel displayed	3-9
4-1	Lubrication procedure for a typical cam switch	4-2
4-2	Circuit board locations	4-5
4-3	Power supply +5 volt test point location	4-6
4-4	Location of securing screws on the Memory circuit board	4-8
4-5	Multi-pin connector and P number orientation for the Memory circuit board	4-9
4-6	Location of securing screws on the Interface circuit board	4-10
4-7	Locations of securing screws on the Output circuit board	4-10
4-8	Locations of securing screws and shield on the Power Supply board	4-11
4-9	Locations of securing screws on the Cursor circuit board	4-11
4-10	Locations of hex nuts and screws on front sub panel which secure the Word Recognizer circuit board	4-12
4-11	Exploded view of circuit-board pin and ferrule	4-14

The illustrations in Section 8 are located near their associated Diagrams on the foldout pages.

LIST OF TABLES

TABLE NO.		PAGE
1-1	Electrical Characteristics	1-3
1-2	Environmental Characteristics	1-8
1-3	Physical Characteristics	1-8
2-1	Format Output Levels	2-1
2-2	Minimum Clock Pulses Required to Display Data (After the MANUAL RESET Button is Pressed)	2-9
2-3	Operational Analysis	2-10
4-1	Power Supply Tolerances	4-6
5-1	Test Equipment	5-1
7-1	Option Information Locator	7-1

SAFETY SUMMARY

The following safety information is provided to ensure safe operation of this instrument. WARNING information is intended to protect the operator; CAUTION information is intended to protect the instrument. The following are general safety precautions that must be observed during all phases of operation and maintenance.

WARNING

Ground the Instrument

To reduce electrical-shock hazard, the mainframe (oscilloscope) chassis must be properly grounded. Refer to the mainframe manual for grounding information.

Do Not Operate in Explosive Atmosphere

Do not operate this instrument in an area where flammable gases or fumes are present. Such operation could cause an explosion.

Avoid Live Circuits

Electrical-shock hazards are present in this instrument. The protective instrument covers must not be removed by operating personnel. Component replacement and internal adjustments must be referred to qualified service personnel.

Do Not Service or Adjust Alone

Do not service or make internal adjustments to this instrument unless another person, capable of giving first aid and resuscitation, is present.

OLDER

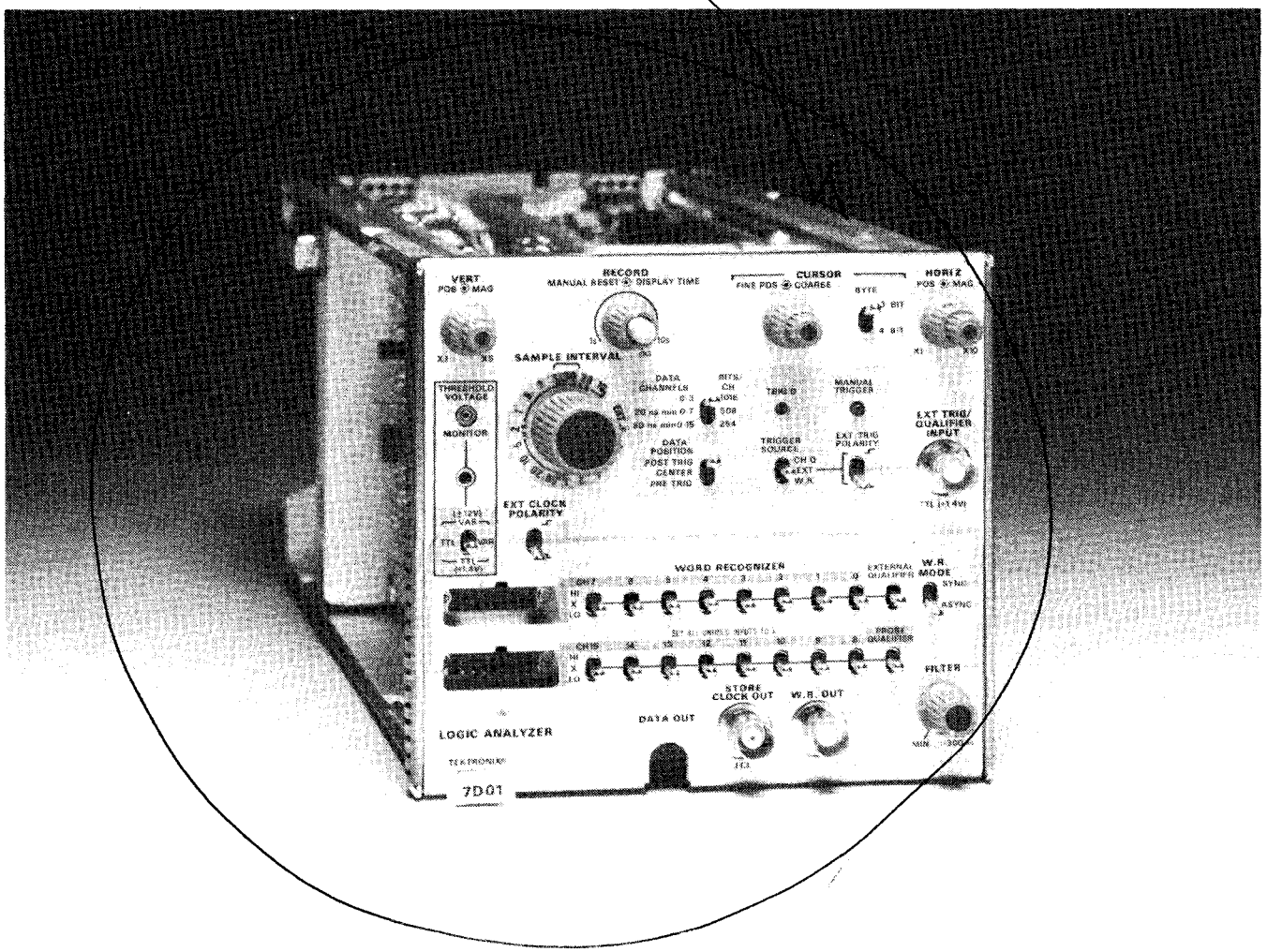

2206-1

7D01 FEATURES

The 7D01 Logic Analyzer will store and display up to 16 channels of digital data when installed in a 7000-series mainframe. The cursor function provides an intensified zone on the data display, and a corresponding numerical readout display shows the logic state (1 or 0) for each displayed channel of data. The position of the cursor, relative to the trigger, is also displayed on the crt readout. Cursor readout is displayed in either 3-bit or 4-bit bytes.

Digital data can be stored in 3 formats: 4 channels at 1016 bits/channel, 8 channels at 508 bits/channel, or 16 channels at 254 bits/channel. The sample rate is selectable from 10 nanoseconds to 5 milliseconds/sample (in a 5-2-1 sequence) when using the internal time base, or can be used with an external clock signal (up to 50 megahertz).

The 7D01 can be triggered from 4 sources: channel 0 data, an external signal, a built-in 16-channel word recognizer, or manually. The triggered data can be produced following the trigger (POST TRIG), centered around the trigger (CENTER), or preceeding the trigger (PRE TRIG). The input threshold can be varied from minus 12 volts to plus 12 volts, or set to plus 1.4 volts for TTL logic levels.

The Word Recognizer produces an output when the logic states of the 16 input data channels match the states of the corresponding Word Recognizer switches. Two qualifier inputs are also provided to enable the Word Recognizer output. The Word Recognizer operates in either the synchronous or asynchronous mode. A variable filter (to at least 300 nanoseconds) allows rejection of brief false-trigger signals.

@

NEWER

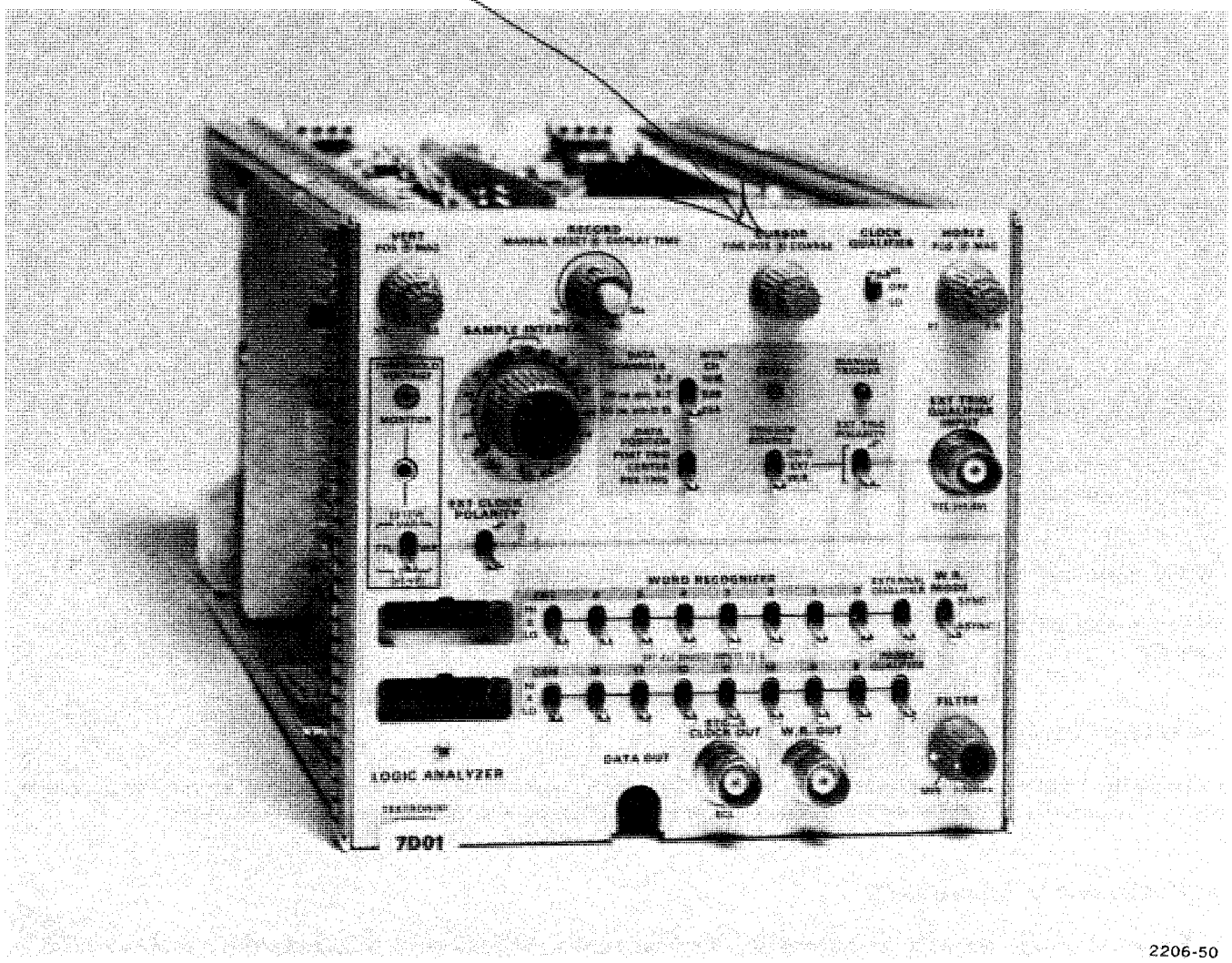

2206-50

7D01 FEATURES

The 7D01 Logic Analyzer will store and display up to 16 channels of digital data when installed in a 7000-series mainframe. The cursor function provides an intensified zone on the data display, and a corresponding numerical readout display shows the logic state (1 or 0) for each displayed channel of data. The position of the cursor, relative to the trigger, is also displayed on the crt readout. Cursor readout is displayed in either 3-bit or 4-bit bytes.

Digital data can be stored in 3 formats: 4 channels at 1016 bits/channel, 8 channels at 508 bits/channel, or 16 channels at 254 bits/channel. The sample rate is selectable from 10 nanoseconds to 5 milliseconds/sample (in a 5-2-1 sequence) when using the internal time base, or can be used with an external clock signal (up to 50 megahertz).

The 7D01 can be triggered from 4 sources: channel 0 data, an external signal, a built-in 16-channel word recognizer, or manually. The triggered data can be produced following the trigger (POST TRIG), centered around the trigger (CENTER), or preceeding the trigger (PRE TRIG). The input threshold can be varied from minus 12 volts to plus 12 volts, or set to plus 1.4 volts for TTL logic levels.

The Word Recognizer produces an output when the logic states of the 16 input data channels match the states of the corresponding Word Recognizer switches. Two qualifier inputs are also provided to enable the Word Recognizer output. The Word Recognizer operates in either the synchronous or asynchronous mode. A variable filter (to at least 300 nanoseconds) allows rejection of brief false-trigger signals.

GENERAL INFORMATION

INTRODUCTION

7D01 Operator's Manual

The Operator's manual contains the information necessary to operate the 7D01 Logic Analyzer. The manual is divided into three sections, each covering a specific topic of the instrument. Section 1 provides a basic description of the 7D01, a glossary of logic terms, installation instructions, and specifications. Section 2 contains operating information for the instrument. Information concerning available options for the 7D01 is on a tabbed page in Section 3.

7D01 Instruction Manual

The Instruction manual provides operating and servicing information for the 7D01 Logic Analyzer. The manual is divided into ten sections. Operating information is covered in the first two sections; servicing information is contained in the remaining eight sections of the manual. Schematics are located at the rear of the manual and can be unfolded and used for reference while reading other parts of the manual. The reference designators and symbols used on the schematics are defined on the first page of the Diagrams section. Abbreviations used in the manuals, except in the parts list and schematics, comply with the American National Standards Institute Y1.1-1972 publication. The parts lists are computer printouts and use computer-supplied abbreviations.

GLOSSARY

The terms listed in this glossary are used throughout this manual.

Asynchronous—Multiple digital information transferred at non-common clock rates.

Bit—The smallest increment of digital information.

CPU—Central Processing Unit.

ECL—Emitter-Coupled Logic.

Jitter—A form of distortion in asynchronous systems that is due to timing variations of the received data.

Multiplexing—The combining of multiple inputs into a single output.

Parallel-to-Serial Conversion—The technique of storing a digital pattern from a parallel bus, then transferring that pattern out to a serial bus.

Parity Bits—Bits added to the data stream which enable the receiver to verify whether the data is correctly or incorrectly received.

PROM—Programmable Read Only Memory.

RAM—Random Access Memory.

Serial Data—Data transferred on a single line. Serial data logic is derived in a sequential mode.

Store Clock—The clock used to store information into the 7D01 memory.

Synchronous—Digital information transferred with the same clock reference.

Threshold Voltage—The comparator input voltage on the inverting input, which is used as a reference. Thus, if the signal on the non-inverting input is above the threshold voltage, the output is HI; if the signal is below the threshold voltage, the output is LO.

TTL—Transistor-Transistor Logic.

"Wired-OR"—ECL gate outputs that are connected together to yield the equivalent output of an OR gate.

INSTALLATION

The 7D01 is calibrated and ready to use when received. It is designed to occupy a vertical and horizontal plug-in compartment in all 7000-series mainframes with readout except the 7104, which may suffer crt damage that will not be covered by the instrument warranty, and the Digital Processing Oscilloscope (DPO), which will not digitize the 7D01 outputs. There are some operating modes, however, that will not provide proper operation. These modes are discussed under Displaying Data in Section 2. Install the 7D01 in the two compartments on the right side of a three-compartment mainframe, or in the right vertical and A horizontal compartments in the center of a four-compartment mainframe.

SEE TEXT ADDITION

NOTE

Some rackmounted mainframes have vertically mounted rods in front of the plug-in compartments that interfere with the installation of the 7D01. Detach these rods by removing the mounting screws at each end before installing the 7D01.

To install the 7D01 in the mainframe, align the 7D01 tracks with the rails of a vertical and horizontal plug-in compartment. Gently slide the 7D01 into the mainframe and push firmly to lock the 7D01 front panel flush with the mainframe.

To remove the 7D01, grasp the release latch in the lower left corner and pull the 7D01 out of the mainframe.

PACKAGING FOR SHIPMENT

If this instrument is to be shipped for long distances by commercial transportation, it is recommended that the instrument be packaged in the original manner for maximum protection. The carton and packing material in which your instrument was shipped should be saved and used for this purpose.

If the original packaging is unfit for use or not available, package the instrument as follows:

1. Obtain a carton of corrugated cardboard with at least a 200 pound test strength and inside dimensions of no less than six inches more than the instrument dimensions; this will allow for cushioning.

2. Surround the instrument with polyethylene sheeting to protect the finish of the instrument.

3. Cushion the instrument on all sides by tightly packing dunnage or urethane foam between the carton and the instrument, allowing three inches on all sides.

4. Seal the carton with shipping tape or an industrial stapler.

Also, if this instrument is to be shipped to a Tektronix Service Center for service or repair, attach a tag to the instrument showing the following: Owner of the instrument (with address), the name of an individual at your firm that can be contacted, complete instrument type and serial number, and a description of the service required. Mark the address of the Tektronix Service Center, and your return address, on the carton in one or more prominent locations.

SPECIFICATION

The electrical specifications listed in Table 1-1 apply when the following conditions are met: (1) The instrument must have been adjusted at an ambient temperature between +20° and +30° C (+68° and +86° F), (2) the instrument must be operating in an ambient temperature between 0° and +40° C (+32° and +104° F), and (3) the instrument must have been operating for at least 20 minutes.

TABLE 1-1
Electrical Characteristics

Characteristic	Performance Requirement	
CLOCK AND DATA INPUTS		
Probe Inputs (Clock, Qualifier, and Data)		
Input R and C	1 MΩ within 5%, paralleled by approx. 5 pF.	
Threshold Voltage		
VAR (at Monitor Jack)	−12 V or less, to at least +12 V.	
TTL	+1.4 V within 0.2 V.	
Minimum Logic Swing	500 mV plus 2% of threshold voltage p-p or less, centered on threshold voltage.	
Maximum Logic Swing	−60 V or less, to at least threshold voltage plus 10 V.	
Maximum Non-Destructive Input Voltage	−60 V or less, to at least +60 V.	
External Clock		
Minimum Clock Period		
CH 0-3	20 ns or less.	
CH 0-7	20 ns or less.	
CH 0-15	40 ns or less.	
Minimum Clock Pulse Width		
	HI Level	**LO Level**
CH 0-3	10 ns or less	10 ns or less
CH 0-7	10 ns or less	10 ns or less
CH 0-15	20 ns or less	20 ns or less
Minimum Data Setup Time		
CH 0-3	20 ns or less.	
CH 0-7	20 ns or less.	
CH 0-15	23 ns or less.	
Minimum Data Hold Time	0 ns or less.	
Clock Qualifier		
	Setup Time	**Hold Time**
P6451 Probe	20 ns	0 ns
External Input (measured at external input connector)	11 ns	7 ns

TABLE 1-1 (CONT.)
Electrical Characteristics

Characteristic	Performance Requirement
CLOCK AND DATA INPUTS (CONT.)	
Internal Clock	
Minimum Sample Interval	
CH 0-3	10 ns or less.
CH 0-7	20 ns or less.
CH 0-15	50 ns or less.
Minimum Data Pulse Width (to Ensure Recording)	1 sample interval plus 5 ns or less.
INTERNAL CLOCK	
Crystal Oscillator Frequency	100 MHz within 0.005 MHz.
Sample Intervals	10 ns to 5 ms/sample in 1-2-5 sequence.
TRIGGER	
Trigger Sources	
CH 0	Triggers on rising edge of CH 0 data.
External Trig/Qualifier Input	
Threshold	+1.4 V within 0.2 V (TTL Level).
Minimum Pulse Width	15 ns or less.
Max Safe Input Voltage	−5 V or less, to at least +10 V.
Word Recognizer	16 Data inputs, Probe Qualifier, and External Qualifier. Output is true when input conditions match switch settings (HI, X, LO).
Minimum Input Pulse Width (Asynchronous Mode)	
Any Single Channel	10 ns or less.
Channels 0-3	15 ns or less.
Any Other Combination	20 ns or less.
Filter	Continuously variable to at least 300 ns.
Synchronous Mode	Coincidence of matching combination and an external clock edge must occur for recognition.
Minimum Setup Time	12.5 ns or less.
Minimum Hold Time	8.5 ns or less.

TABLE 1-1 (CONT.)
Electrical Characteristics

Characteristic	Performance Requirement
TRIGGER (CONT.)	
Word Recognizer Output	
Voltage	
HI	At least +1.9 V (0.95 V into 50-Ω load).
LO	+0.1 V or less (50 mV into 50-Ω load).
Output Impedance (Rising Edge)	50 Ω, within 10%.
Full Display/First Trigger Mode Selection	Selectable by internal jumper, P617.
Full Display Mode	Produces a full horizontal display.
First Trigger Mode	Accepts the first trigger after reset.
DISPLAY	
Vertical	
Magnify	X1 to at least X5.
Position	Positions magnified display within graticule area.
Horizontal	
Magnify	X1 to at least X9.
Position	Positions magnified display within graticule area.
Display Length in X1 Mag (With Full Data)	7.5 div to 10 div.
Raster Shift With Format Change	1 div or less at X1 mag.
Display Time Range	Approximately 1 sec to 10 sec, followed by reset; or infinite hold.
Manual Reset	Resets to store mode when button is pushed.
Display Format	Selectable by DATA CHANNELS switch:
Ch 0-3 x 1016 Bits/Ch	1 group of 4 traces.
Ch 0-7 x 508 Bits/Ch	2 groups of 4 traces each.
Ch 0-15 x 254 Bits/Ch	4 groups of 4 traces each.
Blanking Time	
Ch 0-3	8 bits.
Ch 0-7	4 bits.
Ch 0-15	2 bits.

TABLE 1-1 (CONT.)
Electrical Characteristics

Characteristic	Performance Requirement
DISPLAY (CONT.)	
Cursor	
Cursor Position Control	Positions intensified zone to any displayed bit, in increments of 1 bit or 16 bits.
Readout	
Cursor Position	Top right-hand readout shows cursor position (in sample intervals) relative to trigger (e.g., TRIG ± xxx).
Data	Bottom readout shows the logic state of each displayed channel at the cursor (Hi = 1; Lo = 0).
Byte Switch	Breaks data readout into 3-bit or 4-bit bytes. In 16 channels and 3-bit bytes, the left hand group remains 4 bits.
Trigger Intensified Zone	Intensifies trigger point selected by data position switch.
Position (Relative to Displayed Trigger Event)	
10 ns/Sample	Typically within 4 bits.
20 ns/Sample	Typically within 3 bits.
50 ns to 5 ms/Sample	Within 1 bit.
DATA OUT	
Data Out Connector J120*	
Parallel Data Out	Parallel data from Memory, non-inverted.

Channel	Pin	Channel	Pin
0	13	8	9
1	25	9	21
2	12	10	8
3	24	11	20
4	11	12	7
5	23	13	19
6	10	14	6
7	22	15	18

Serial Data Out	Pin 4—Serial data from memory, non-inverted.
Channel Sequence:	
CH 0-3	2-3-0-1-2, etc.
CH 0-7	2-3-4-5-6-7-0-1-2, etc.
CH 0-15	2-3-12-13-14-15-8-9-10-11-4-5-6-7-0-1-2, etc.

*All logic levels are ECL levels unless otherwise specified.

TABLE 1-1 (CONT.)
Electrical Characteristics

Characteristic	Performance Requirement
DATA OUT (CONT.)	
Data Out Connector J120* (Cont.)	
Frame Output	Pin 16—Falling edge indicates end of Ch 2; rising edge indicates end of Ch 3. Frame occurs every 16th sweep (independent of format).
Flag Output	Pin-14 Falling edge indicates end of channel; rising edge indicates beginning of channel.
Record Enable	Pin 15 Hi input forces reset. Hi output occurs when MANUAL RESET is pressed.
External Display Clock Input	Pin 3, terminated with 100 Ω to −2 V.
Frequency Range	Less than 1 Hz to at least 2 MHz.
Ground	Pin 17.
Signal Select Jumper P300	Pins 1, 2, and 5 of J120 are connected to pins 7, 8, and 6, respectively of the Signal Select Jumper. There are 5 signals available to the Signal Select Jumper.
Format Output	Pins 1 and 2 of Signal Select Jumper:

	Pin 1	Pin 2
Ch 0-3	Hi	Hi
Ch 0-7	Hi	Lo
Ch 0-15	Lo	Lo

Display/Store Output	Pin 3 of the Signal Select Jumper:
Store	Hi
Display	Lo
Trigger Intensify Output	Pin 4 of Signal Select Jumper, LO = intensified trigger point on display.
Master Reset Output	Pin 5 of Signal Select Jumper, HI during reset.
POWER SUPPLY	
Line Voltage Ranges	Refer to 7000-series oscilloscope performance requirements.
Internal Power Supplies −4.8 Volt Accuracy (+20° to +30° C) measured at TP 112 on memory board.	Within 4.80 V to -4.975 V.
−2.0 Volt Accuracy (+20° to +30° C)	Within 0.2 V.

*All logic levels are ECL levels unless otherwise specified.

TABLE 1-2
Environmental Characteristics

Characteristic	Performance Requirement
Temperature	
Operating	0° to +40° C.
Storage	−55° to +75° C.
Altitude	
Operating	To 15,000 feet.
Storage	To 50,000 feet.
Transportation	Qualified under National Safe Transit Committee Test Procedure 1A, Category II.

TABLE 1-3
Physical Characteristics

Characteristic	Description
Weight (Without Accessories)	Approximately 4.4 lbs (2.0 kg).
Dimensions	See Figure 1-1.

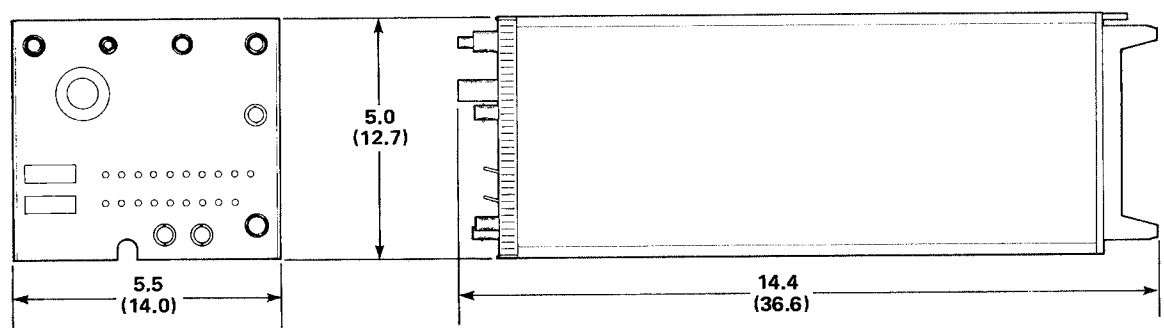

NOTE

DIMENSIONS ARE GIVEN WITH TOP FIGURE IN INCHES AND BOTTOM FIGURE IN CENTIMETERS.

2206-2

Figure 1-1. 7D01 Dimensional Drawing.

STANDARD ACCESSORIES

1 ea . . . . . Instruction Manual

1 ea . . . . . Operator's Manual

2 ea . . . . . P6451 Probe Package

For more information, refer to the tabbed Accessories page in the back of this manual.

OPERATING INSTRUCTIONS

This section includes a description of the 7D01 front-panel controls, connectors, and indicators. Also included is detailed operating information, some basic application procedures and a functional check procedure. Refer to Section 1, General Information, for a glossary of terms and installation instructions.

FRONT-PANEL CONTROLS, CONNECTORS, AND INDICATORS

The location and function of the front-panel controls, connectors, and indicators are illustrated in Figure 2-1.

Refer to Detailed Operating Information for a discussion of the auxiliary functions available with the internal selectors, and the input and output signals available through the Data Out connector.

DETAILED OPERATING INFORMATION

AUXILIARY FUNCTIONS

Several auxiliary functions can be selected by connectors and jumpers located inside the 7D01. A 25-pin Data Out connector is also located inside the 7D01 to provide various input and output signals for use with external equipment. The following information describes the auxiliary functions with procedures for making the appropriate internal connections.

Display Clock Source Selector (P835)

Two-pin jumper which determines whether the 7D01 is to be used for display only, or for display and data output (serial and parallel data at the Data Out connector).

When the 7D01 is used for data displays, P835 must be set to Internal Display Clock (see Fig. 2-2). When the 7D01 is to be used for display and data output (serial and parallel), P835 must be set to External Display Clock (see Fig. 2-2) and an external display clock signal must be applied to pin 3 of Data Out connector J120 to synchronize the data output. The rate per bit of the serial and parallel output data is determined by the rate of the external display clock signal applied to pin 3 of Data Out connector J120. If a display is desired, as well as serial and parallel data, the external display clock signal repetition rate must be approximately 2 microseconds. The internal display clock signal is not available as an output.

Full Display/First Trigger Selector (P617)

Two-pin jumper which determines whether data is displayed at the first acceptable trigger after the memory has addressed one full block of data, or whether data is displayed after the first acceptable trigger.

When P617 is set to Full Display (see Fig. 2-2), the memory stores one complete block of data and then accepts the next trigger. The Full Display position is recommended for most repetitive signal applications. If a trigger is expected soon after a reset pulse, or if the wait between displays at slow sample rates is objectionable, P617 can be set to the First Trigger position (see Fig. 2-2). Refer to Synchronous and Asynchronous Data Sampling for more information.

Signal Selector (P300)

Internal multi-pin connector P300 provides 5 signals for connection to 3 outputs on Data Out connector J120. Any 3 of the 5 signals can be used for external use. Figure 2-3 shows the location of P300, and identifies the pin assignments as they are connected when shipped from the factory. To change signal outputs at J120, move the jumper connections at P300 (refer to Fig's. 2-3 and 2-4).

FORMAT OUTPUT. Two outputs (P300 pins 1 and 2) provide ECL-level outputs which indicate the channel selected by the front-panel DATA CHANNELS switch. Table 2-1 shows the ECL levels at pins 1 and 2 of P300 for each position of the DATA CHANNELS switch.

TABLE 2-1
Format Output Levels

DATA CHANNELS	P300	
	Pin 1	Pin 2
0-3	HI	HI
0-7	HI	LO
0-15	LO	LO

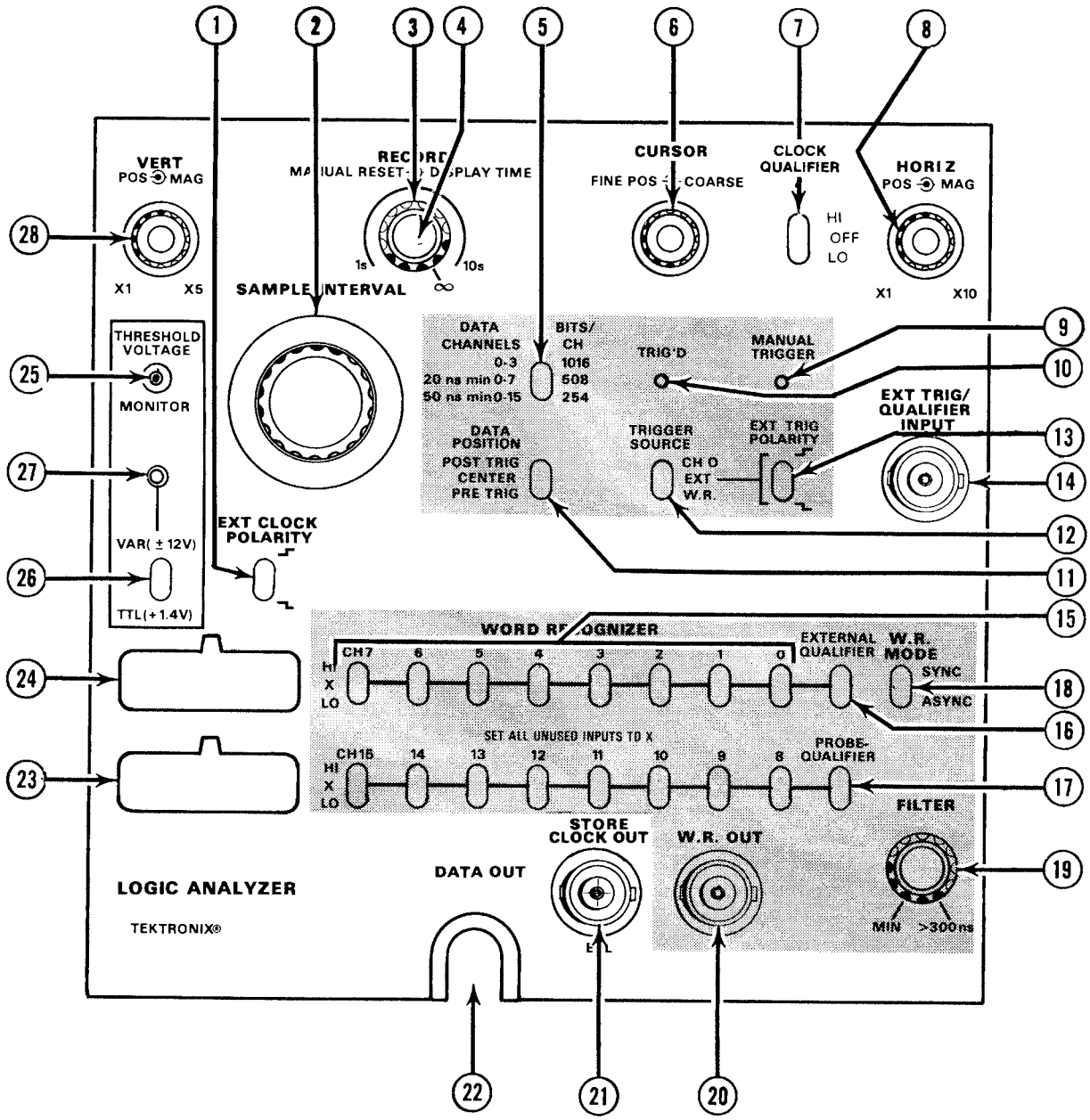

(1) EXT CLOCK POLARITY Switch—Selects the active edge of the external clock signal applied to the C (clock) input of the Channel 0-7 Data Input connector.

(2) SAMPLE INTERVAL Switch—Selects the data input sample rate. Sample rates from 5 milliseconds to 10 nanoseconds are provided in a 5-2-1 sequence. A lamp behind the knob skirt blinks when the sample rate is too fast for 8-channel operation (10 nanosecond) or 16-channel (10 or 20 nanosecond) sample intervals. When set to the EXT position, the C (clock) input is selected. The SAMPLE INTERVAL lamp does not blink when operating in the EXT position.

2206-3A

Figure 2-1. Front panel controls, connectors, and indicators.

(1) EXT CLOCK POLARITY Switch—Selects the active edge of the external clock signal applied to the C (clock) input of the Channel 0-7 Data Input connector.

(2) SAMPLE INTERVAL Switch—Selects the data input sample rate. Sample rates from 5 milliseconds to 10 nanoseconds are provided in a 5-2-1 sequence. A lamp behind the knob skirt blinks when the sample rate is too fast for 8-channel operation (10 nanosecond) or 16-channel (10 or 20 nanosecond) sample intervals. When set to the EXT position, the C (clock) input is selected. The SAMPLE INTERVAL lamp does not blink when operating in the EXT position. LAMP IS NORMALLY OUT (NOT A THING

(3) DISPLAY TIME Control—Sets the time that the stored data is displayed before a new store cycle begins. The display time is continuously variable from approximately 1 to 10 seconds, or can be held indefinitely by turning the control fully clockwise into the ∞ detent position.

(4) MANUAL RESET Pushbutton (concentric with DISPLAY TIME control)—Overrides the DISPLAY TIME control and starts a new store cycle.

(5) DATA CHANNELS and BITS/CH Switch—Selects data from channels 0 through 3 with 1016 bits of memory per channel (0-3/1016). Selects data from channels 0 through 7 with 508 bits of memory per channel (0-7/508). Selects data from channels 0 through 15 with 254 bits of memory per channel (0-15/254).

(6) FINE POS/COARSE Controls—Positions the cursor intensified zone to any bit on the data display in one-bit (FINE POS) or 16-bit increments (COARSE).

(7) BYTE Switch—Selects the display format of the cursor readout (displayed on the crt of 7000-series oscilloscope mainframe) for either 3-bit (e.g., 0 100 101 010 001 100) or 4-bit (e.g., 0100 1010 1000 1100) bytes.

(8) HORIZ POS/MAG Controls—Horizontally positions the display with the graticule area (POS) and provides continuously variable horizontal magnification (X1 to X10) of the display (MAG).

(9) MANUAL TRIGGER Switch—Activates the trigger circuit.

(10) TRIG'D Indicator—Lights on the first accepted trigger (after reset) and remains on until the store cycle is reset.

(11) DATA POSITION Switch—Three-position switch selects data for storage in the memory after the trigger (POST TRIG), before and after the trigger (CENTER), or before the trigger (PRE TRIG).

(12) TRIGGER SOURCE Switch—Three-position switch derives the trigger signal from the rising edge of the channel 0 data (CH 0), from an external signal applied to the EXT TRIG/QUALIFIER INPUT Connector (EXT), or from the Word Recognizer (W.R.).

(13) EXT TRIG POLARITY Switch—Selects either the rising or the falling slope as the active edge of the external triggering signal.

(14) EXT TRIG/QUALIFIER INPUT Connector—Provides input for an external signal (TTL level) to be used as an external trigger signal or as an external qualifier signal for the Word Recognizer.

(15) Channel Switches—Sixteen three-position switches (channels 0 through 15) select the active state for each channel of data input. The active state for each channel can be selected to be a high level (HI), a low level (LO), or to disregard the data level (X). The amplitude of the HI and LO states is determined by the THRESHOLD VOLTAGE controls.

(16) EXTERNAL QUALIFIER Switch—Three-position switch selects active state of the signal applied to the EXT TRIG/QUALIFIER INPUT connector. The active state can be selected to be a high level (HI), a low level (LO), or to disregard the data level (X).

(17) PROBE QUALIFIER Switch—Three-position switch selects the active state of the signal applied to pin Q of the channel 0-15 Data Input connector. The active state can be selected to be a high level (HI), a low level (LO), or to disregard the data level (X). The amplitude of the HI and LO states is determined by the THRESHOLD VOLTAGE controls.

(18) W.R. MODE Switch—Two-position switch determines the operating mode of the Word Recognizer system. In the SYNC position, the signal at the W.R. OUT connector goes HI on the active edge of the clock signal after all WORD RECOGNIZER conditions are met (Channels 0 through 15, EXTERNAL QUALIFIER, and PROBE QUALIFIER). The clock input is applied to the C (clock) input of the Digital Acquisition Probe connected to the Channel 0-7 and External Clock Data Input connector. In the ASYNC position, the signal at the W.R. OUT connector goes HI after all WORD RECOGNIZER conditions are met (Channels 0 through 15, EXTERNAL QUALIFIER, and PROBE QUALIFIER).

(19) FILTER Control—Inhibits the HI output at the W.R. OUT connector for about 300 nanoseconds. The FILTER control is functional only when operating in the ASYNC W.R. MODE and is used to prevent triggering from noise or bits that have no meaning at that time.

(20) W.R. OUT Connector—Provides a HI output level for external use when all WORD RECOGNIZER conditions have been satisfied. OUT ONLY IN ASYNC MODE

(21) STORE CLOCK OUT Connector—Provides ECL level store-clock signal for use with external equipment. This output will drive an unterminated 50-ohm cable. (Do NOT terminate cable with 50-ohm load to ground.)

(22) DATA OUT Access—Provides access to the Data Output connector (J120) inside the instrument.

(23) Channel 8-15 and Probe Qualifier Data Input Connector—Provides probe inputs to Channels 8 through 15 and the Probe Qualifier.

(24) Channel 0-7 and External Clock Data Input Connector—Provides probe inputs for Channels 0 through 7 and the External Clock.

(25) THRESHOLD VOLTAGE MONITOR Pin Jack—Provides an output to monitor the dc threshold voltage of the data inputs.

(26) THRESHOLD VOLTAGE Selector Switch—Three-position switch selects a preset threshold voltage for TTL logic levels (TTL), or a + to − 12-volt variable threshold voltage (VAR) as determined by the screwdriver adjustment. Also selects the preset threshold voltage for the Channel 0-7 and External Clock Data Input connector and the variable threshold voltage (+ to − 12 volts) for the Channel 8-15 and Probe Qualifier Data Input connector (TTL-VAR).

(27) THRESHOLD VOLTAGE Adjustment—Provides variable threshold voltage (plus or minus 12 volts) when the THRESHOLD VOLTAGE selector is set to VAR.

(28) VERT POS/MAG—Vertically positions the display within the graticule area (POS). Provides continuously variable vertical magnification (X1 to X5) of the display (MAG).

Figure 2-1 (Continued). Front panel controls, connectors, and indicators.

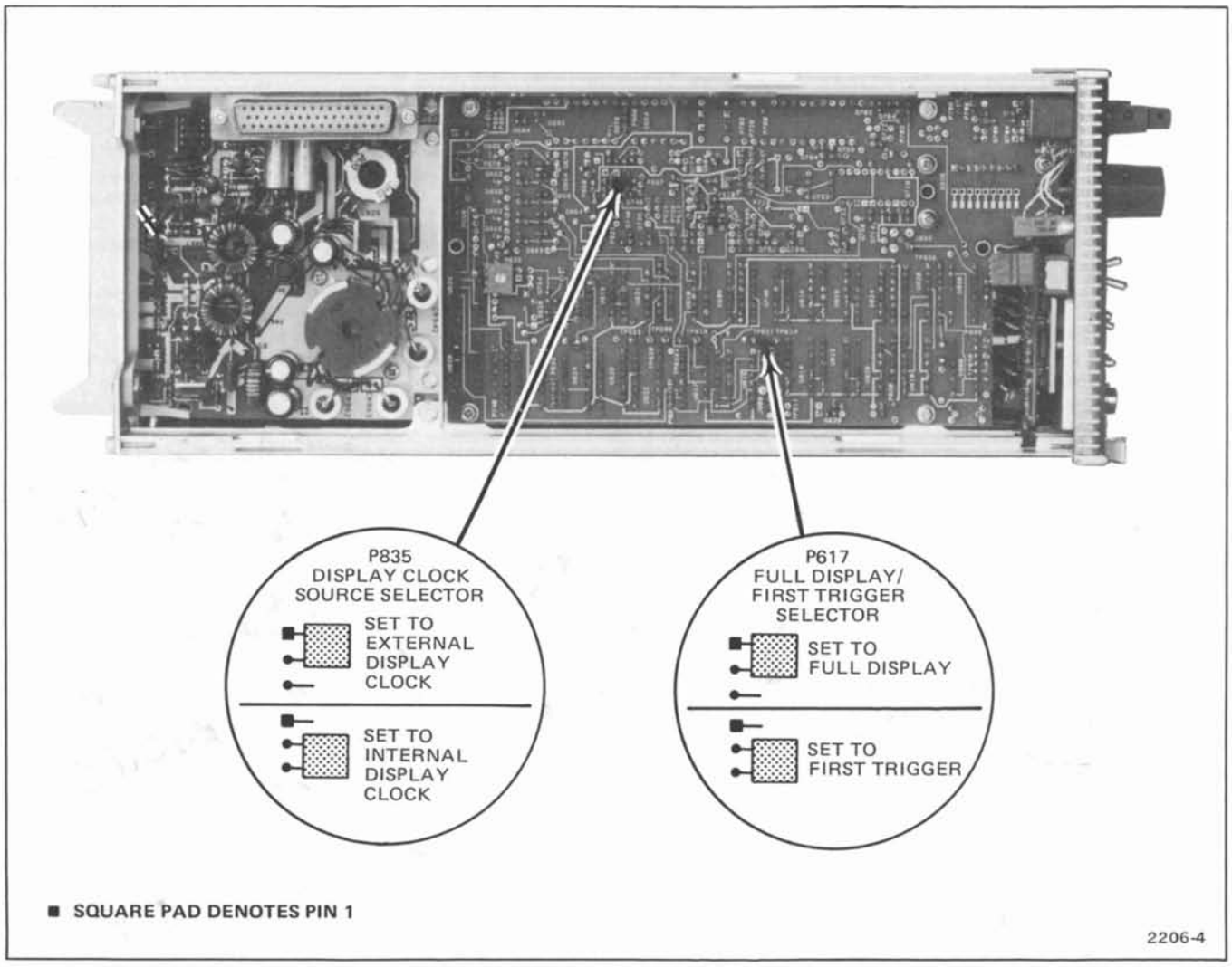

Figure 2-2. Internal Display Clock Source and Full Display/First Trigger Selectors.

DISPLAY-STORE OUTPUT (P300, pin 3). This output indicates whether the 7D01 memory is in the display or store mode. An ECL LO level indicates the memory is in the display mode. An ECL HI level indicates that the memory is in the store mode.

TRIGGER INTENSIFY OUTPUT (P300, pin 4). During the bit when the trigger point on the data display is intensified, an ECL LO level is present at pin 4 of P300.

MASTER RESET OUTPUT (P300, pin 5). This output indicates whether the 7D01 is in the store and display or reset mode. An ECL HI level indicates that the memory is in a reset mode. An ECL LO level indicates that the memory is in either the store or display mode.

SIGNAL CONNECTIONS

Data Acquisition

Data is acquired through two high input-impedance Tektronix P6451 Data Acquisition Probes supplied with the 7D01. One probe applies data inputs to channels 0 through 7 and the external clock; the other applies data inputs to channels 8 through 15 and the probe qualifier. The probe microhook connectors provide a convenient means of attaching the probe to the data source. A preset threshold voltage (+1.4 volts) for TTL logic levels or a variable threshold voltage (+12 to −12 volts) can be selected for either or both probes with the THRESHOLD VOLTAGE selector switch.

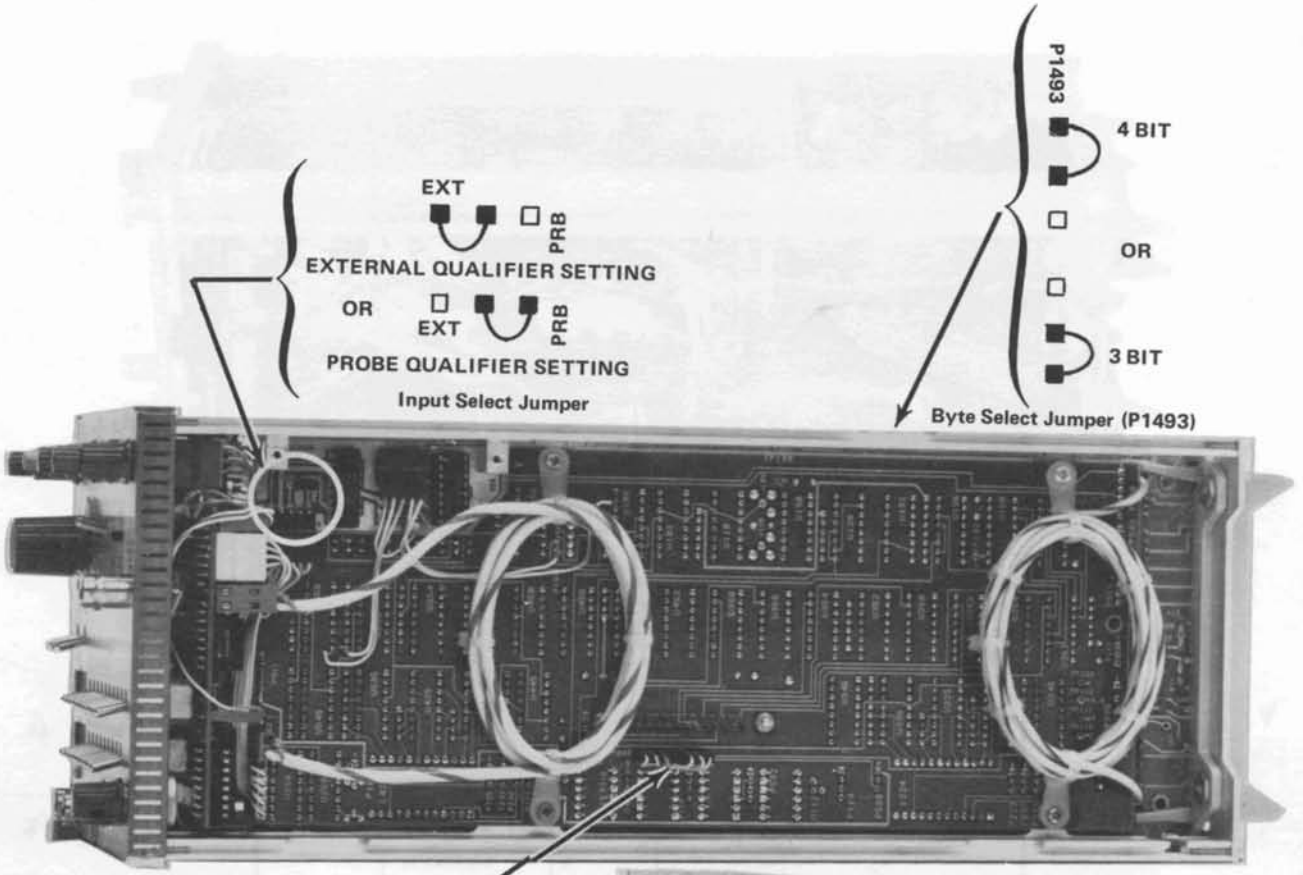

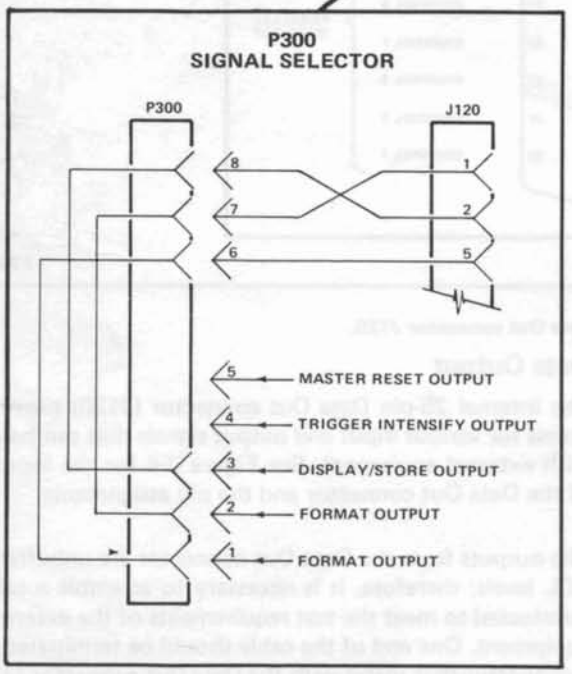

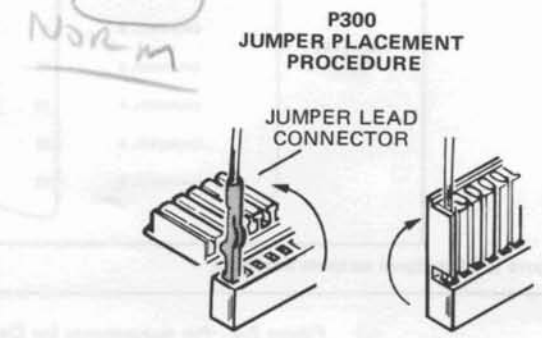

1. Remove P300 from instrument.
2. Bend grooved portion of holder away from the jumper lead connector in direction of its hinged side.
3. Insert the jumper lead connector into the selected hole in the holder. Crimped side of jumper lead connector faces toward hinged portion of holder.
4. Bend the grooved part of holder back to its vertical position so connector is inserted into groove.
5. Observe the connector polarity and install P300 back into the instrument.

2206-51

Figure 2-3. Internal Signal Selector.

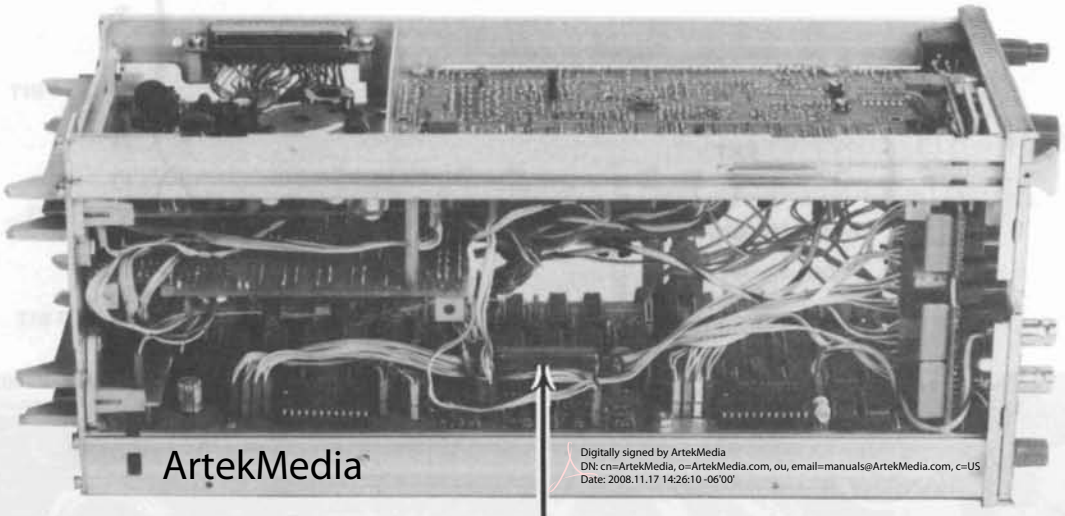

ArtekMedia
Digitally signed by ArtekMedia
DN: cn=ArtekMedia, o=ArtekMedia.com, ou, email=manuals@ArtekMedia.com, c=US
Date: 2008.11.17 14:26:10 -06'00'

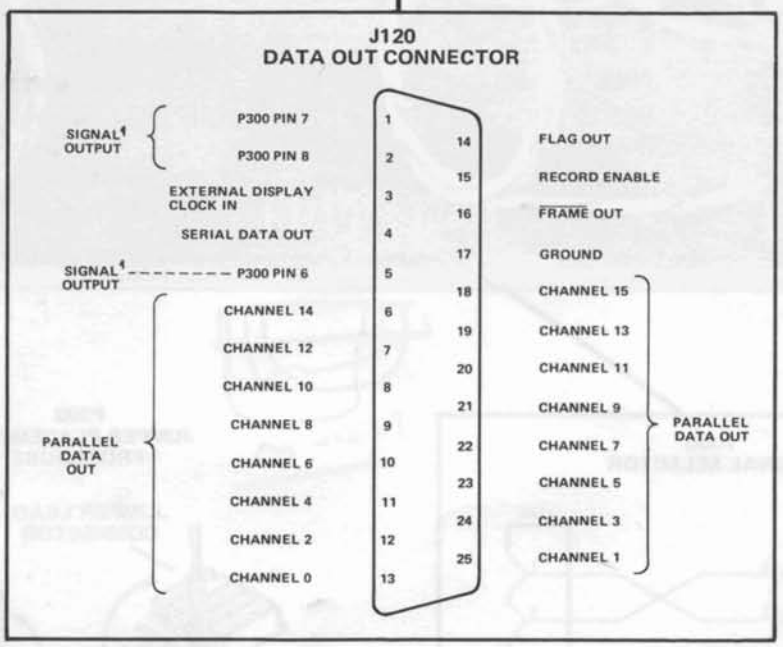

[1] Refer to Figure 2-3 for signal outputs available.

2206-41

Figure 2-4. Pin assignments for Data Out connector J120.

SIGNAL CONNECTIONS

Data Acquisition

Data is acquired through two high input-impedance Tektronix P6451 Data Acquisition Probes supplied with the 7D01. One probe applies data inputs to channels 0 through 7 and the external clock; the other applies data inputs to channels 8 through 15 and the probe qualifier. The probe microhook connectors provide a convenient means of attaching the probe to the data source. A preset threshold voltage (+1.4 volts) for TTL logic levels or a variable threshold voltage (+12 to −12 volts) can be selected for either or both probes with the THRESHOLD VOLTAGE selector switch.

Data Output

The internal 25-pin Data Out connector (J120) provides access for various input and output signals that can be used with external equipment. See Figure 2-4 for the location of the Data Out connector and the pin assignments.

The outputs from the Data Out connector are unbuffered ECL levels; therefore, it is necessary to assemble a cable terminated to meet the test requirements of the external equipment. One end of the cable should be terminated with a connector that mates with the Data Out connector (J120). Use a type DB-25P, 25-pin male connector, such as Tektronix Part 131-0570-00. See Figure 2-5 for two suggested assembly methods. The external display clock and record

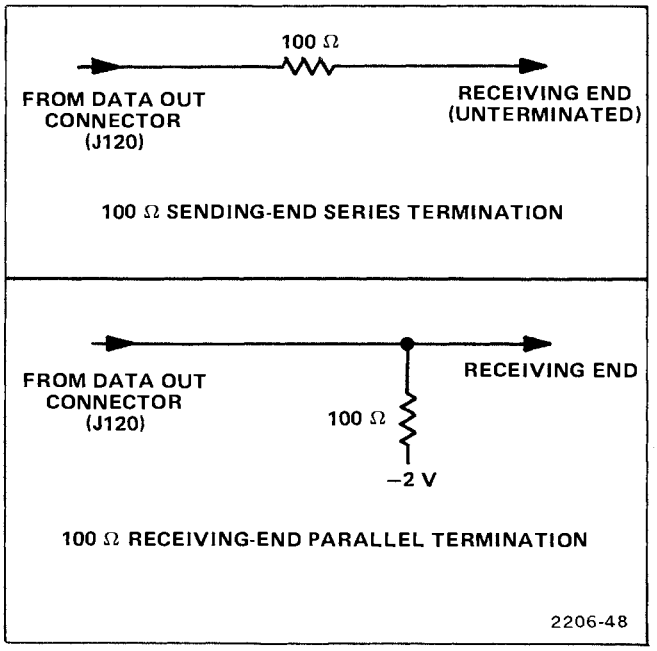

Figure 2-5. Suggested methods for terminating data outputs from Data Out connector J120.

enable inputs are terminated in 100 ohms to −2 volts in the 7D01. For further information, contact your Tektronix Field Office or representative.

In addition to the channel 0 through 15 parallel data outputs, the following input and output signals can be obtained through the Data Out connector (refer to Fig. 2-4 for the location of Data Out connector J120 and the pin assignments).

EXTERNAL DISPLAY CLOCK IN. Provides input for an ECL-level clock pulse and must be used to synchronize serial and parallel data. The internal Display Clock Source Selector, P835, must be set to the External Display Clock position (see procedure under Auxiliary Functions).

SERIAL DATA OUT. Provides serial data from channel 0 through 15. An external display clock must be applied to pin 3, and the Display Clock Source Selector, P835, must be set to the External Display Clock position for synchronized output (see procedure under Auxiliary Functions).

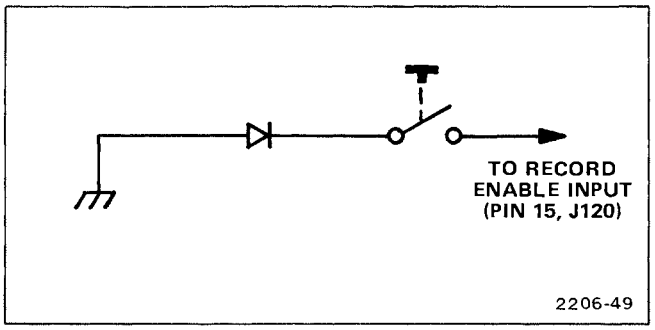

Figure 2-6. Suggested method for assembling a remote Manual Reset button.

PARALLEL DATA OUTPUT. Provides outputs from channels 0 through 15. An external display clock must be applied to pin 3, and the Display Clock Source Selector, P835, must be set to External Display Clock for synchronized output (see procedure under Auxiliary Functions).

FLAG OUT. Provides an output pulse which indicates the beginning of each data channel. A positive-going edge indicates the beginning of a data channel (channels 0 through 15). Data is not valid during a LO ECL level.

RECORD ENABLE. A HI ECL level input pulse forces reset of the memory. When the front-panel MANUAL RESET button is pushed, a HI output level is produced. A remote Manual Reset button can be assembled as shown in Figure 2-6.

FRAME OUT. Provides pulse to synchronize serial data. An ECL LO level occurs at every sixteenth flag pulse for the duration of channel 3. The Frame Out pulse occurs at every sixteenth flag pulse regardless of the setting of the DATA CHANNELS switch. For the sequence in 4, 8, and 16 data channel operation, see Serial Data Out Channel Sequence in Table 1-1, Electrical Characteristics.

DISPLAYING DATA

The 7D01 provides some convenient and unique display capabilities. Figure 2-7 shows a typical channel 0 to 15 display with a 254-bit window. One row of intensified dots are trigger markers that indicate whether the logic analyzer is operating in the pre, center, or post trigger mode as selected by the DATA POSITION switch. A second row of intensified dots are cursor markers that can be moved across the timing diagram with the CURSOR COARSE and FINE POS controls. The cursor function provides a simultaneous timing and logic state display by reading out the selected timing diagram word in 3-bit or 4-bit byte binary at the bottom of the crt. In addition, the number of sample intervals and direction (i.e., − or +) from the intensified trigger markers to the cursor markers appears at the top right side of the crt.

The X10 horizontal and X5 vertical POS and MAG controls expand any portion of the display for close examination. Further magnification can be obtained with a vertical amplifier and time-base plug-in unit, in addition to a 7D01, installed in a 4-compartment mainframe. Refer to Triggering for more information.

NOTE

If the 7D01 is used in a storage mainframe, it is recommended that the mainframe be operated in the non-store mode.

TRIGGERING

The built-in Word Recognizer provides a versatile trigger source. Logic states of parallel words up to 18 bits wide can be preselected by the front-panel channel switches. The Word Recognizer then triggers the 7D01 when the incoming parallel word matches the one preselected by the channel switches (HI, LO, or X-don't care). The intensified trigger markers on the data display indicate the trigger point selected by the Word Recognizer.

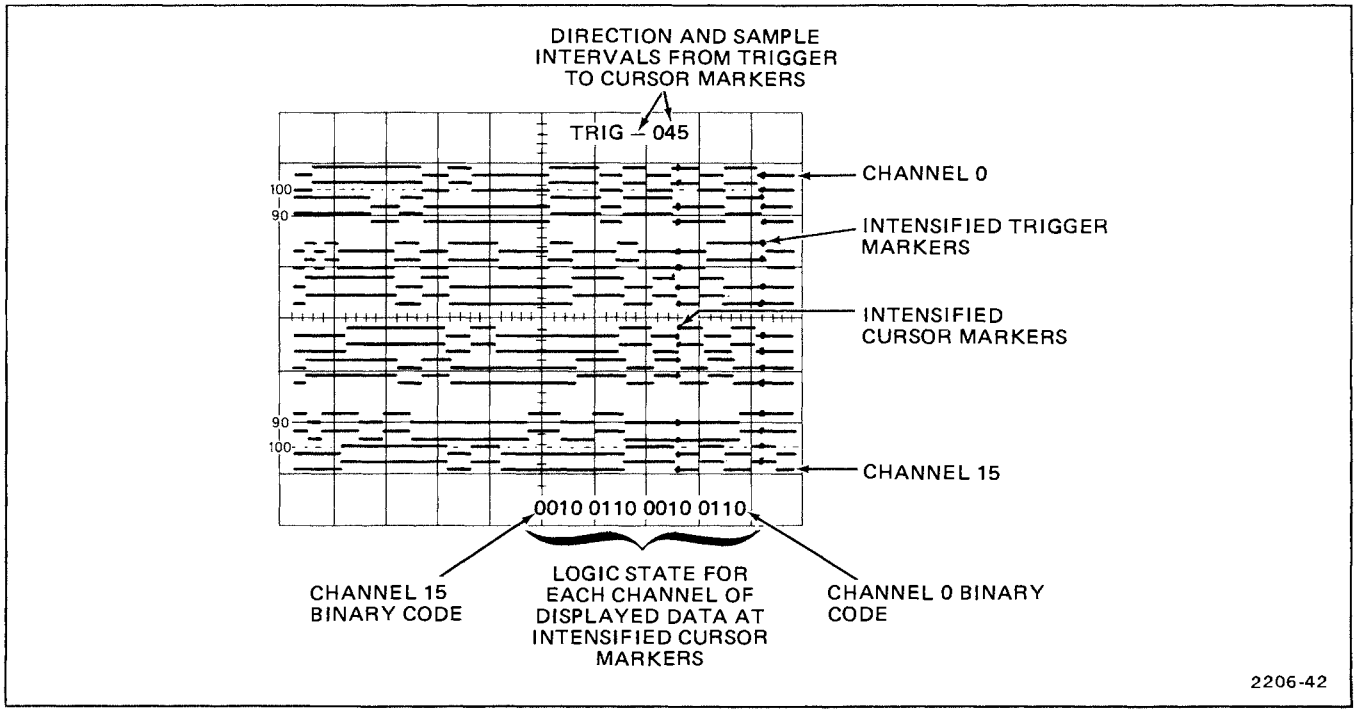

Figure 2-7. Typical channel 0 to 15 pre-trigger data display.

The Word Recognizer also provides a +2-volt (approximately) output pulse from a 50-ohm source at the front-panel W.R. OUT connector when the incoming parallel word matches the preselected word on the channel switches. This output pulse can be used to trigger a time-base plug-in to provide an analog display when the 7D01 is installed in a 4-compartment mainframe. By selecting the mainframe Alternate or Right Vertical Mode operation, analog and digital information can be displayed either simultaneously or separately.

The 7D01 is not designed to operate in the mainframe Horizontal Alternate mode. However, dual-trace displays (i.e. between the 7D01 and a pair of plug-in units installed in the Left Vertical and B Horizontal compartments) can be obtained by selecting the mainframe Vertical Alternate and Horizontal Chop modes. Refer to Fault Identification under Applications for an example of combined digital and analog display operation.

In addition to triggering the 7D01 on a preselected word or pattern, a trigger can be obtained from channel 0 of the input data or from an external qualifier signal such as an error flag, sector pulse, enable signal, or any unique single-channel event. For example, in the synchronous mode, a microprocessor loop can be checked by inputting from the external qualifier with all other channels set to X (don't care). Thus, the Word Recognizer triggers on the qualifier without recognizing the other channels, and displays an isolated window rather than the entire data train.

CLOCK QUALIFIER OPERATION

The Clock Qualifier allows you to make optimum use of the 4K memory present in the 7D01. In many test situations, continuous sampling fills the memory with data that isn't relevant to the problem at hand. When a properly timed qualifier signal is available, then entire memory space can be filled only with pertinent data.

The Clock Qualifier is used when the 7D01 is sampling in synchronous mode, using the clock of the system under test. During normal synchronous operation, data is stored in memory once during each clock cycle. When the Clock Qualifier is activated, new data is stored only when the clock cycle is qualified by an external signal.

The qualifying signal can come from the Probe Qualifier of the data probe (CH 8-15) or can come from a source external to the 7D01 through the unit's EXT TRIG/QUALIFIER INPUT. An internal jumper is used to select either the Probe Qualifier or the External Qualifier. If the Probe Qualifier is used, the PROBE QUALIFIER switch in the WORD RECOGNIZER section of the 7D01 should be set to the don't care (X) position. If an External Qualifier is used, the EXTERNAL QUALIFIER switch should be set to the don't care (X) position. If you use and External Qualifier signal, a word recognizer unit such as the WR 501 can be used to obtain multi-line qualifier capabilities.

The CLOCK QUALIFIER switch on the 7D01 is used to enable the Clock Qualifier, and also to select whether a high or low input signal will be used as the qualifier. This is true for External Qualifier signals and Probe Qualifier signals alike. You can also use the EXT CLOCK POLARITY switch to select whether the positive (⎍) or negative (⎏) edge of the clock pulse will start the data sampling process. Different combinations of the CLOCK QUALIFIER switch and the EXT CLOCK POLARITY switch will cause variations in the sampling process.

CLOCK QUALIFIER SWITCH DESCRIPTION

The CLOCK QUALIFIER is a three-position front-panel switch. The switch positions control Clock Qualifier operations in the following ways:

HI – Data is clocked into memory in the active clock edge while the Qualifier input is high.

OFF – Clock Qualifier is disabled.

LO – Data is clocked into memory on the active clock edge while the Qualifier input is low.

The EXT CLOCK POLARITY switch selects either the positive (⎍) or negative (⎏) clock edge as the active edge.

ADDITIONAL OPERATING INFORMATION

CLOCK QUALIFIER RULE NO. 1. The WORD RECOGNIZER is not automatically qualified by the clock qualifier. To qualify both the clock and WORD RECOGNIZER trigger, a WORD RECOGNIZER input and clock qualifier must be connected to the same signal. Therefore, whenever WORD RECOGNIZER triggering is employed with clock qualification, it is necessary to also qualify the WORD RECOGNIZER with the same signal which is qualifying the clock.

Example: Use the probe qualifier as WORD RECOGNIZER input, and use the external qualifier to qualify the clock.

CLOCK QUALIFIER RULE NO. 2. When the clock qualifier is utilized, the qualifying signal is input through either the EXT QUALIFIER connector or through the probe qualifier line on the CH 8-15 probe, by selecting the appropriate jumper position on the Clock Qualifier circuit board. Whichever qualifier input is used, the respective WORD RECOGNIZER qualification switch must be left in the "X" (don't care) position.

ASYNCHRONOUS AND SYNCHRONOUS DATA SAMPLING

ASYNCHRONOUS. When analyzing logic timing in a hardware system, it is desirable to sample data asynchronously. The 7D01 is then clocked internally (i.e., asynchronous to the system under test) to determine clock frequencies and make timing comparisons. Data is sampled asynchronously at a rate of up to 100 megahertz with a minimum data pulse width of 1 sample interval plus 5 nanoseconds. Asynchronous testing requires that data be sampled frequently for maximum timing resolution.

SYNCHRONOUS. For applications where the data is valid at qualified clock transitions is of interest and not the changes in between (e.g., when checking software), the program flow of clocked systems should be sampled externally or synchronously. The 7D01 is then synchronized with the measured system clock at a sampling rate of up to 50 megahertz.

When data is being recorded by the 7D01, there is a minimum number of external clock pulses necessary to produce a transition from record to display mode. The required number of clock pulses varies depending on the DATA POSITION switch and Full Display/First Trigger Selector (P617) settings. Refer to Figure 2-2 for the location of the Full Display/First Trigger Selector (P617).

When in Full Display mode after the MANUAL RESET button is pressed, the entire 4096 bits of memory must be filled with new data before the 7D01 will accept a trigger (4096 bits corresponds to 1024 clock pulses in 4 channel, 512 clock pulses in 8 channel, and 256 clock pulses in 16 channel). After the trigger is accepted, another block of data must be acquired before the 7D01 will switch from the record to the display mode. The size of this block of data depends on the DATA CHANNELS and DATA POSITION switch settings and contains all of the information stored from the trigger point to the end of the displayed trace. This block of data corresponds to the minimum number of clock pulses given in Table 2-2 for the First Trigger mode.

TABLE 2-2
Minimum Clock Pulses Required to Display Data (After the MANUAL RESET Button is Pressed)

DATA CHANNELS	First Trigger Mode			Full Display Mode[1]		
	DATA POSITION			DATA POSITION		
	POST TRIG	CENTER	PRE TRIG	POST TRIG	CENTER	PRE TRIG
0-3	958	510	62	1982	1534	1086
0-7	479	255	31	991	767	543
0-15	239	127	15	495	383	271

[1] **In Full Display mode, the 7D01 must have 1024 clock pulses with 0-3 data channels, 512 clock pulses with 0-7 data channels, and 256 clock pulses with 0-15 data channels before a trigger is accepted.**

In First Trigger mode, however, it is not necessary to fill the entire 4096-bit memory before a trigger is accepted. Instead, a trigger can be accepted at any time after the MANUAL RESET button is pressed and one clock pulse is accepted. Thus, the number of clock pulses needed to cause the 7D01 to switch from record to display mode (after the MANUAL RESET button is pressed) is always less in

First Trigger mode than in Full Display mode (i.e., by 1024, 512, or 256 clock pulses).

For the 7DO1 to trigger, the trigger event must change from a FALSE condition to a TRUE condition after the 7DO1 is ready to accept a trigger as described above. The only exception to this is when the trigger event comes from the Word Recognizer (in SYNC mode) with the 7DO1 in First Trigger Mode and with the SAMPLE INTERVAL switch in EXT. Under these conditions, the trigger event may be TRUE when the aquisition is started, in which case the 7DO1 will trigger on the first clock pulse after the aquisition begins.

When measuring a circuit with gated clock pulses and data, there may not be enough clock pulses before the system is gated off to cause the 7D0-1 to trigger or display data in the Full Display mode. If this condition occurs, the First Trigger mode will enable the 7D01 to accept a trigger and store the data. However, the data will not be displayed unless the minimum number of clock pulses specified in Table 2-2 is available. The additional clock pulses necessary to switch the 7D01 from record to display mode can be obtained by changing the SAMPLE INTERVAL switch from the EXT position to the 5 ms position after the data is recorded. However, the data recorded after the SAMPLE INTERVAL switch was changed to the 5 ms position is not valid since the system being measured is not functioning during that interval.

OPERATIONAL ANALYSIS

The following table lists some irregular operating symptoms with their probable causes and corrective procedures. Table 2-3 is intended to assist the operator in determining whether an irregular operating symptom is the result of a measurement technique problem or a malfunction in the 7D01. The probable causes for the symptoms listed in Table 2-3 assume that the 7D01 and associated equipment is operating properly. The corrective procedures can be performed by the operator without additional test equipment.

TABLE 2-3
Operational Analysis

Symptom	Probable Cause	Corrective Procedure
1. No data display.	Display positioned off screen.	Check HORIZ and VERT POS settings.
	Wrong threshold voltage.	Check THRESHOLD VOLTAGE selector and/or adjustment setting.
2. No data display with SAMPLE INTERVAL in EXT position.	No external clock signal.	Check that clock signal is applied through Data Acquisition Probe.
	Wrong threshold voltage.	Check THRESHOLD VOLTAGE selector and/or adjustment for proper setting.
3. No data display with: a. W.R. MODE in SYNC position. b. TRIGGER SOURCE in W.R. position. c. TRIG'D indicator not lit.	No external clock signal.	Check that clock signal is applied through Data Acquisition Probe.
	Word selected on WORD RECOGNIZER channel switches does not exist exist.	Check that WORD RECOGNIZER channel switches are set for an existing word.
4. No data display with: a. W.R. MODE in ASYNC position. b. TRIGGER SOURCE in W.R. position. c. TRIG'D indicator not lit.	Word selected on WORD RECOGNIZER channel switches does not [redacted].	Check that WORD RECOGNIZER channel switches are set for an existing word.
	Asynchronous filter is rejecting valid data.	Check that FILTER is not set too far clockwise.
5. When Testing Circuits with Gated Clocks a. No data display with: (1) SAMPLE INTERVAL in EXT position. (2) Full Display/First Trigger (P617) in First Trigger position. (3) TRIG'D indicator not lit.	Trigger word existed only during first clock pulse and is ignored by the 7D01.	See Asynchronous and Synchronous Data Sampling for minimum number of clock pulses required to obtain a display in First Trigger mode. — OR — Set SAMPLE INTERVAL to 5 ms position for at least 5 seconds. Then reset SAMPLE INTERVAL to EXT position and start data source.

TABLE 2-3 (CONT.)
Operational Analysis

Symptom	Probable Cause	Corrective Procedure
5. (Continued) b. No data display with: (1) SAMPLE INTERVAL in EXT position. (2) Full Display/First Trigger (P617) in First Trigger position. (3) TRIG'D indicator lit.	Insufficient number of clock pulses after trigger word to fill memory (display) from trigger markers to end of sweep.	See Asynchronous and Synchronous Data Sampling for minimum number of clock pulses required to obtain a display in First Trigger mode. —OR— Set SAMPLE INTERVAL to 5 ms position until display appears. Then reset SAMPLE INTERVAL to EXT position.
c. No data display with: (1) SAMPLE INTERVAL in EXT position. (2) Full Display/First Trigger (P617) in Full Display position. (3) TRIG'D indicator lit.	Insufficient number of clock pulses after trigger word to fill 7D01 memory (display) from trigger markers to end of sweep.	See Asynchronous and Synchronous Data Sampling for minimum number of clock pulses required to obtain a display in Full Display mode. —OR— Set SAMPLE INTERVAL to 5 ms position until display appears. Then reset SAMPLE INTERVAL to EXT position. **NOTE** *First Trigger mode may be preferred since fewer clock pulses are required to switch from record to display mode.*
d. No data display with: (1) SAMPLE INTERVAL in EXT position. (2) Full Display/First Trigger (P617) in Full Display position. (3) TRIG'D indicator not lit.	Insufficient number of clock pulses to fill 7D01 memory.	See Asynchronous and Synchronous Data Sampling for minimum number of clock pulses required to obtain a display in Full Display mode. Set SAMPLE INTERVAL to 5 ms position for at least 5 seconds. Then reset SAMPLE INTERVAL to EXT position. When data is present from Data Acquisition Probe, TRIG'D indicator should light and display should appear. But: (1) If there is no display and TRIG'D indicator is lit, set SAMPLE INTERVAL to 5 ms position until display appears. Then reset SAMPLE INTERVAL to EXT position. (2) If display does not appear and TRIG'D indicator is not lit, refer to Corrective Procedure for Symptom 3 and 4. **NOTE** *First Trigger mode may be preferred since fewer clock pulses are required to switch from record to display mode.*

TABLE 2-3 (CONT.)
Operational Analysis

Symptom	Probable Cause	Corrective Procedure
6. Incorrect data display when installed in a storage mainframe.	Mainframe set for store mode.	Set mainframe for non-store mode. **NOTE** *When the 7D01 is used in a storage mainframe, it is recommended that the mainframe be operated in the non-store mode.*
7. Incorrect data display.	Wrong mainframe Vertical and/or Horizontal Mode.	Check that proper mainframe Vertical and/or Horizontal Mode is selected.
	Wrong threshold voltage.	Check THRESHOLD VOLTAGE selector and/or adjustment for proper setting.
8. Incorrect data display after changing DATA CHANNEL or DATA POSITION setting.	MANUAL RESET was not pressed after changing DATA CHANNEL or DATA POSITION setting.	Press MANUAL RESET to store new data in memory in the correct format.
9. Incorrect or noisy data display on channels that are not connected to a Data Acquisition Probe.	Data input lines are not biased properly when a Data Acquisition Probe is not connected.	Connect a Data Acquisition Probe to unused channels. —OR— Use only channel 0-7 and set DATA CHANNELS to 0-3 or 0-7 position. Set all unused WORD RECOGNIZER channel switches (8-15) to X (don't care) position.
10. Random or incorrect triggering from WORD RECOGNIZER with only one Data Acquisition Probe connected.	WORD RECOGNIZER channel switches on unused channels are set to HI or LO positions which can cause some channels to oscillate.	Set WORD RECOGNIZER channel switches on unused channels to X (don't care) position.
11. Displayed data on left side of trigger marker is blanked out.	Full Display/First Trigger (P617) is in First Trigger position.	Set Full Display/First Trigger (P617) to Full Display position.
12. Portions of data input do not appear on display (aliasing) with internal clock pulses.	Data changes faster than the sampling rate.	Set SAMPLE INTERVAL for more than 1 sample interval for each data pulse (i.e., data pulse = shortest period of time that data remains in HI or LO state).

APPLICATIONS

INTRODUCTION

The 7D01 with its built-in Word Recognizer is a versatile measurement tool for detailed logic analysis. A choice of configurations are available to meet a variety of logic analysis and troubleshooting requirements. The following information includes some specific application procedures and examples of applications for the 7D01. Contact your local Tektronix Field Office or representative for assistance on applications that are not included here.

FAULT IDENTIFICATION

The following procedure describes a method for finding a fault, determining its location on a data train, and examining it on a real-time analog display. This method assumes that the fault occurs at a unique word. For this application, the 7D01 is used with a companion vertical amplifier and time-base plug-in unit in a 4-compartment mainframe with readout.

1. Connect test equipment as shown in Figure 2-8A.

2. Set the 7D01 W.R. MODE switch to ASYNC and the TRIGGER SOURCE switch to W.R.

3. Set the mainframe to display the right vertical and A horizontal compartments.

4. Obtain the desired data display (see example in Fig. 2-8B).

5. Set the CURSOR controls to position the intensified cursor markers to the leading edge of the displayed fault.

6. Note the binary word readout (bottom right side of graticule).

7. Set the Word Recognizer for the binary word code noted in step 6.

8. Connect a 10X probe from the vertical amplifier plug-in unit to the data channel that contains the fault as determined in step 5.

9. Set the mainframe to display the left vertical and B horizontal compartments.

10. Set the vertical amplifier deflection factor and time-base plug-in unit sweep rate and triggering for a stable analog display of the data channel selected in step 8 (see example in Fig. 2-8C).

NOTE

The 7D01 FILTER control can be used to provide some horizontal positioning of the display.

DELAY BY WORDS

The following describes a method for preselecting a binary word and positioning the data display window anywhere from the first to the 10 millionth time that the binary word occurs. For this application, the 7D01 is used with a companion digital events delay plug-in unit (e.g., Tektronix 7D10 Digital Events Delay) in a mainframe with readout.

1. Connect the test equipment as shown in Figure 2-9A.

2. Set the digital events delay plug-in unit for independent B sweep delay mode and external ac-coupled + slope triggering.

3. Set the 7D01 W.R. MODE switch to ASYNC and the TRIGGER SOURCE switch to W.R.

4. Set the WORD RECOGNIZER channel switches for the desired binary word code.

5. Set the mainframe to display the right vertical compartment.

6. Set the digital events delay plug-in unit for a stable display triggered on the + slope of the events start trigger input.

7. Set the digital events delay plug-in unit to indicate, on the events count readout, the desired number of times

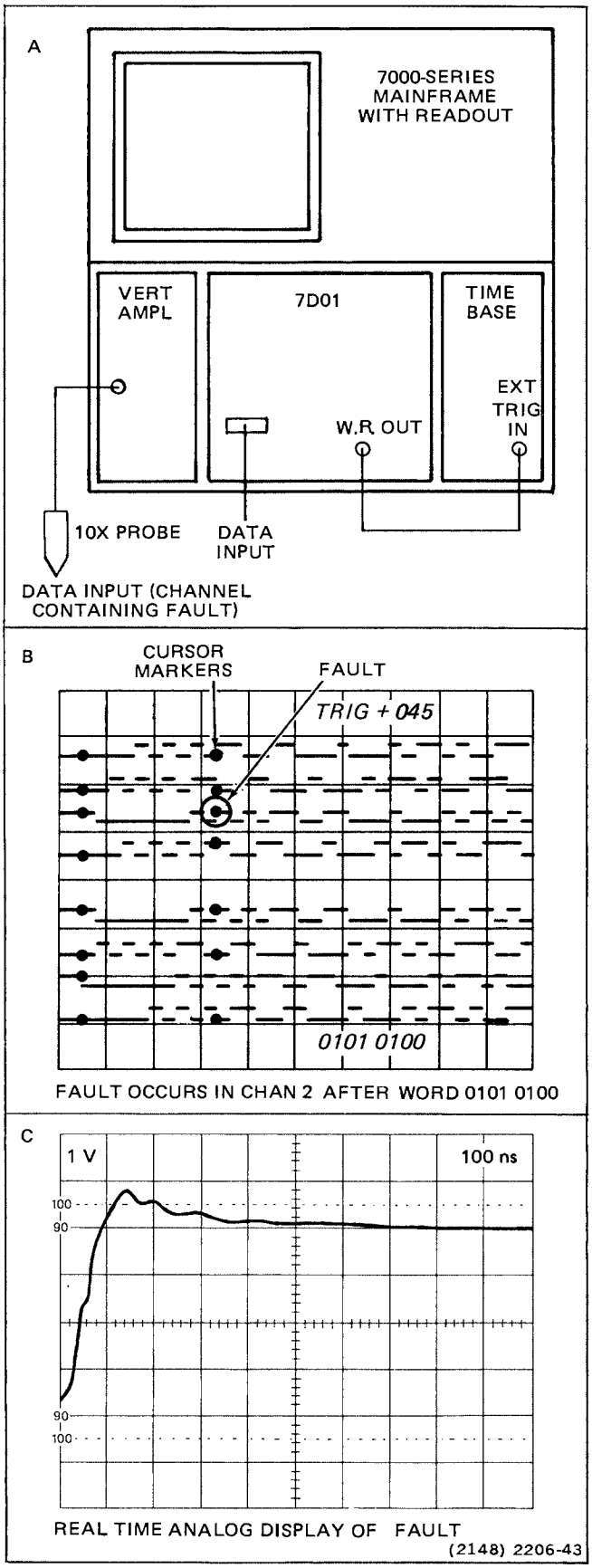

Figure 2-8. Equipment setup and displays for finding a data fault and examining it on an analog display.

that the preselected binary word is to occur before a data display is initiated. For example, if the digital events delay plug-in unit is set for an events count readout of 0000025, the word recognizer will initiate a display of the data before, after, or on both sides of the 25th time that the preselected binary word occurs (see example in Fig. 2-9B).

DELAY BY EVENTS

The following procedure describes a method for positioning the data display window to virtually anywhere along a data train. For this application, the 7D01 is used with a companion digital events delay plug-in unit (e.g., Tektronix 7D10 Digital Events Delay) in a mainframe with readout.

1. Connect the test equipment as shown in Figure 2-10A.

2. Set the digital events delay plug-in unit for external ac-coupled + slope triggering.

3. Set the 7D01 TRIGGER SOURCE switch to EXT and trigger from the external trigger input.

4. Set the mainframe to display the right vertical compartment.

5. Set the digital events delay plug-in unit for a stable display triggered on the + slope of the events start trigger input.

6. Set the digital events delay plug-in unit to indicate the desired number of clock pulses, on the events count readout, that the 7D01 bit-storage window is to be shifted down the data train. For example, if the digital events delay plug-in unit is set for an events count readout of 0010500, the 7D01 will initiate a display of the data before, after, or on both sides of the 10,500th clock pulse (see example in Fig. 2-10B).

STATE TABLE AND MAPPING DISPLAYS

The 7D01 in combination with a display formatter (e.g., Tektronix DF1 Display Formatter) adds state table and mapping displays to the timing diagram display normally available with the 7D01 alone.

The state table mode enables the data stored in the 7D01 memory to be displayed in a tabular format. The display formatter generates the cursor readout in the timing diagram mode, and the state table mode then generates a state display of 17 samples, starting at the cursor, in hexadecimal, octal, or binary code.

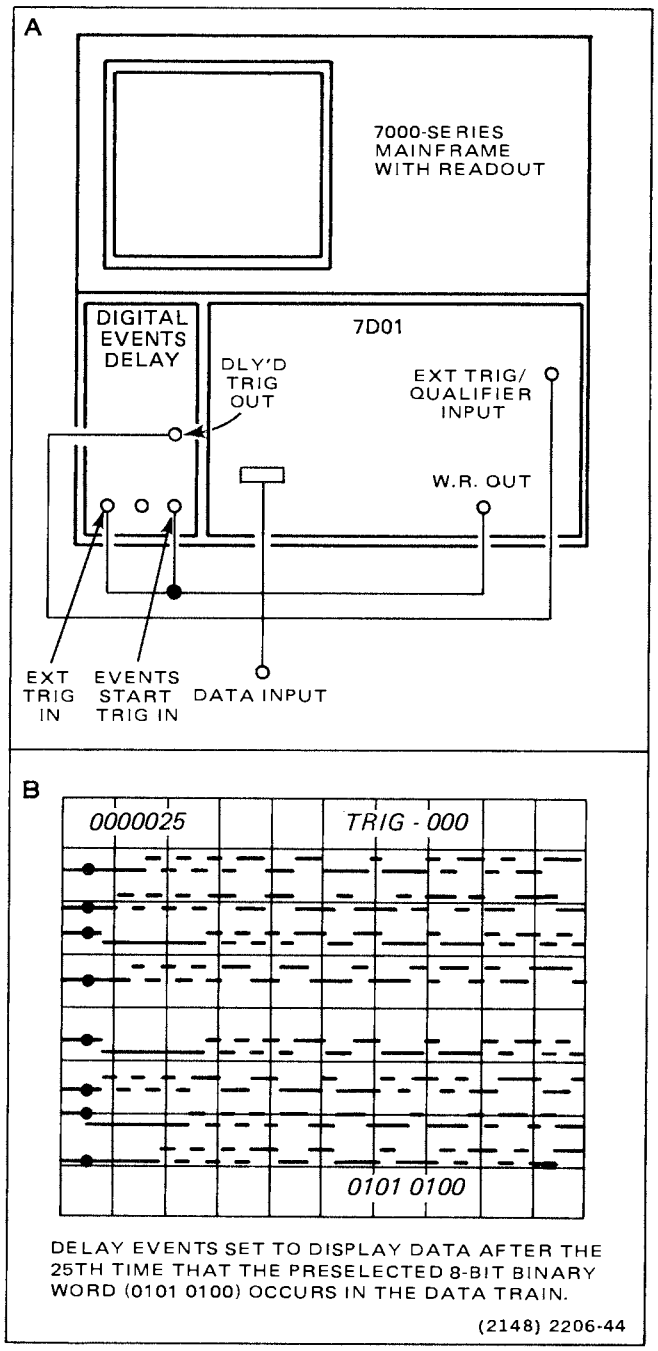

Figure 2-9. Equipment setup and data display window that has been positioned after a preselected word has occurred 25 times.

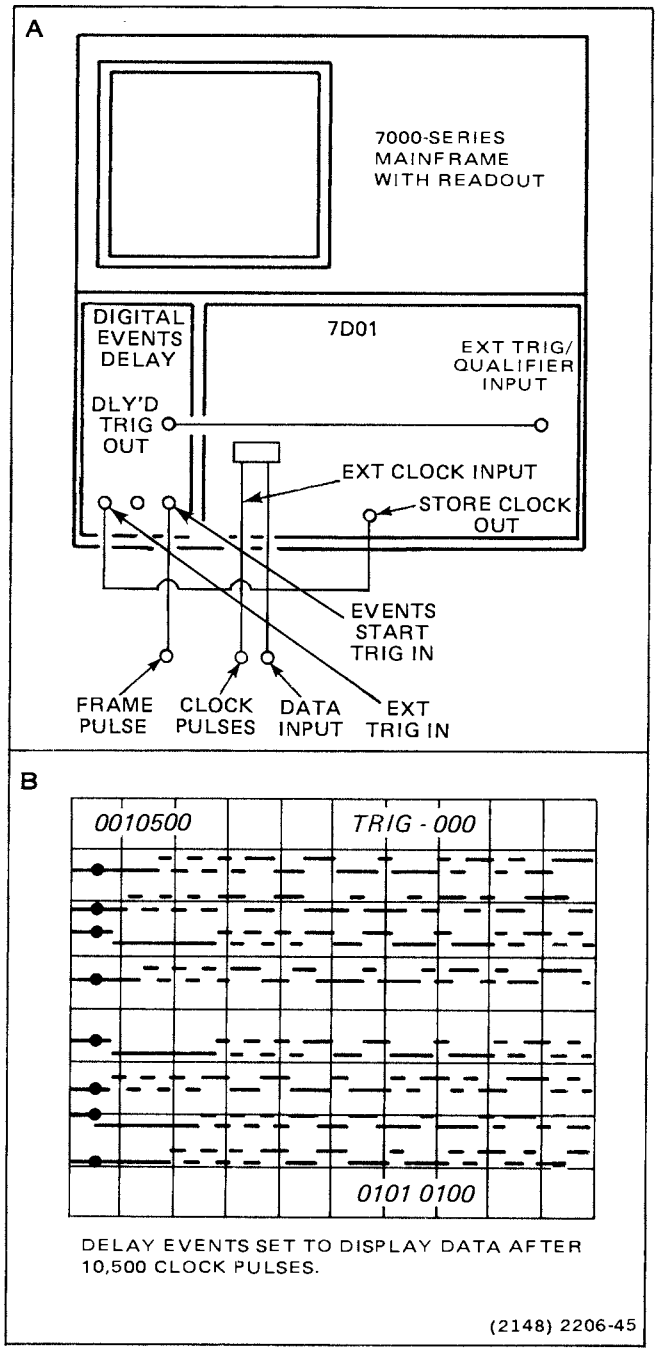

Figure 2-10. Equipment setup and display window that has been positioned after 10,500 clock pulses have occurred.

By using the EXCLUSIVE OR mode (featured with the Tektronix DF1 Display Formatter), the state table from the 7D01 and a reference state table can be displayed simultaneously and faulty bits can be quickly identified. For example, data from the 7D01 memory can be transferred to the display formatter memory for a reference and then incoming data stored in the 7D01 memory can be compared to the reference data. Any differences in the 7D01 data can be identified (each bit that does not agree with the reference data is intensified by the Tektronix DF1 Display Formatter) and the problem located by using the timing diagram display.

The map display is useful for fast overall checks of digital-system program flow. First, determine the pattern (map) for a particular set of digital inputs, then check for a change in the displayed pattern which might indicate abnormal operation.

The mapping and state table modes are particularly useful for checking faulty address lines. For example, evaluate program flow by examining a map display. If a problem word is located, switch to a hexadecimal state-table display in the EXCLUSIVE OR mode for more precise identification of the problem (refer to the preceding EXCLUSIVE OR discussion). Then switch to the binary state-table display to locate the incorrect address line. Further examination of the address line on a timing diagram display reveals a set up and hold problem between the clock and the address line. If desired, use the word recognizer output to trigger an analog display of the 7D01 data output for an even closer examination (refer to the previous Fault Identification discussion for more information).

MICROPROCESSOR ANALYSIS

The following is an example of a technique for troubleshooting a malfunctioning microprocessor system.

A malfunctioning microprocessor system is shown in Figure 2-11. Software had previously worked properly, but was still not free of suspicion. Data was stored in the RAM (random-access read/write memory). The system program was resident in the PROM (programmable read only memory). Restart vectors pointed to the address of the first instruction in the restart routine.

When the restart hardware was exercised, the CPU (central processing unit) should have performed certain initialization routines and then gone to the Wait for Interrupt mode. The terminal would then call up other operating software in the PROM, or provide access to a binary loader. The failure consisted of very erratic operation after restart.

The 7D01 was connected to the system as shown in Figure 2-11 to store and display a large data block from the 8 data lines. The display was obtained by triggering the 7D01 on the beginning of the restart cycle and using the system clock as an external data sampling strobe.

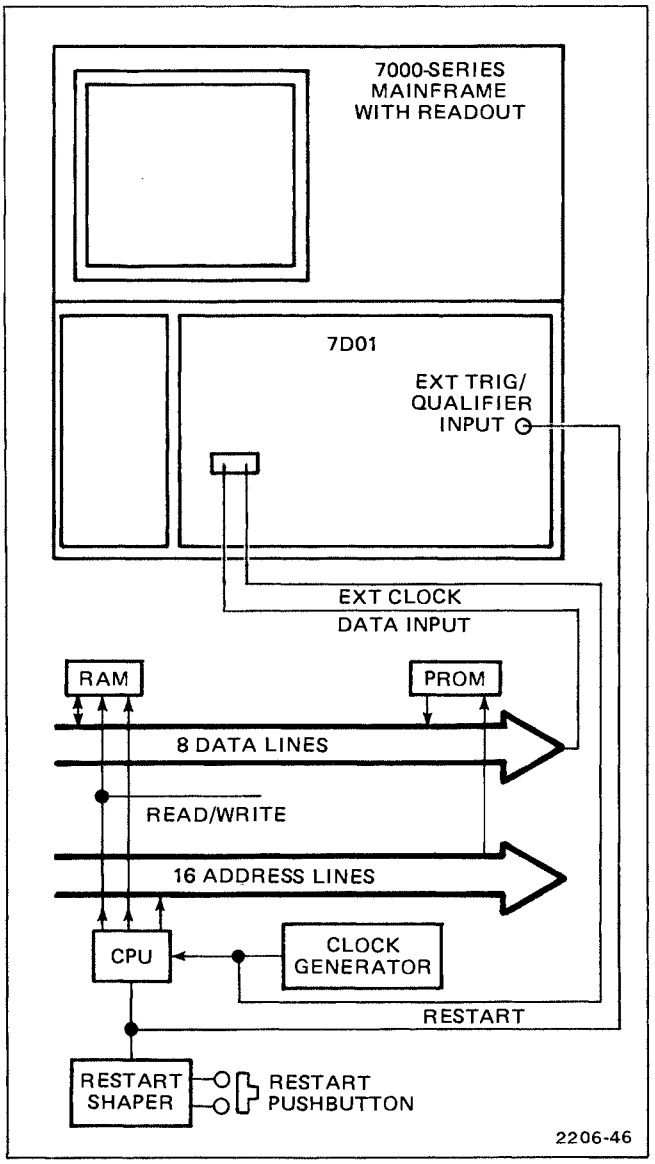

Figure 2-11. Typical setup for troubleshooting a microprocessor system.

Analysis of the data display showed the problem to be a dropped bit in the portion of the PROM providing the restart routine. The CPU fetched an invalid restart vector, causing data from the RAM to be executed as instructions.

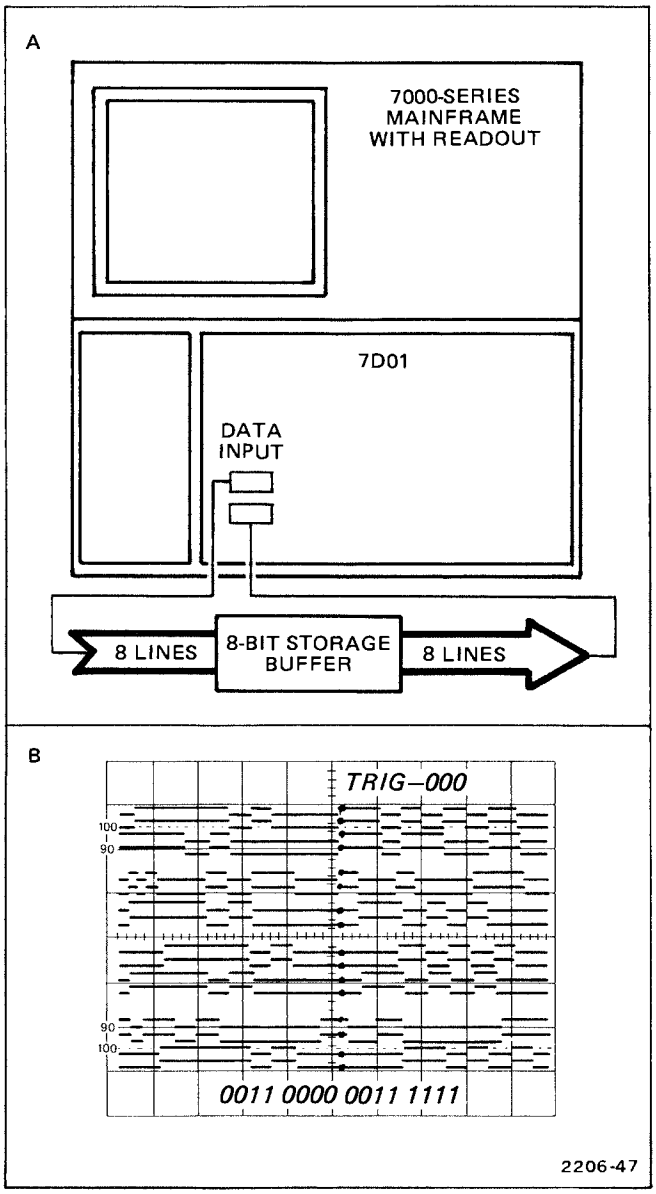

Figure 2-12. Typical setup and display for troubleshooting a storage buffer.

STORAGE BUFFER ANALYSIS

The following procedure describes a method for checking the performance of a storage buffer by monitoring the inputs and outputs simultaneously.

The non-synchronous buffer is a commonly used type, in which data flows continuously from input to output. A display of this data flow will show at a glance if all the memory cells are functioning properly.

The 7D01 can store 8 input and 8 output lines simultaneously and display all 16 data lines on a single display. By displaying an input line and the corresponding output line together, a quick comparison can be made. A typical setup and display is shown in Figure 2-12A and B. When the 7D01 is clocked asynchronously from the internal clock, a high-resolution timing diagram display will provide timing information as well as reveal malfunctions that would otherwise be difficult to detect with any other type of test equipment such as an oscilloscope or dvm.

FUNCTIONAL CHECK

The following procedure checks the basic operation of this instrument.

Functions only are checked in this procedure, therefore a minimum amount of test equipment is required. Measurement quantities and tolerances are not checked.

The Word Recognizer Filter and Output signal, and the Variable Threshold Voltage functions are not checked in this procedure because extra test equipment would be required. These functions, and their associated specifications are checked in the Performance Check and Adjustment section of the 7D01 Instruction manual. Refer these checks to a qualified service technician.

Preliminary Procedure

1. Install 7D01 in oscilloscope mainframe (see Installation instructions in General Information section).

2. Connect a P6451 Data Acquisition Probe to top data-input connector (Channel 0-7 and External Clock).

3. Set 7D01 front-panel controls as follows:

VERT POS	midrange
MAG	X1
RECORD DISPLAY TIME. .	∞(fully clockwise detent)
CURSOR BYTE (SN B086084—below). .	4 BIT
CLOCK QUALIFIER (SN B086085—up)	OFF

HORIZ
POS . . . . . .midrange
MAG. X1
THRESHOLD
VOLTAGE. . . . . .TTL
EXT CLOCK
POLARITY . . . . . .⎍
SAMPLE
INTERVAL . . . . . .1 μs
DATA
CHANNELS. 0-3
DATA
POSITION. . . . . .CENTER
TRIG SOURCE. . . .CH 0
EXT TRIG
POLARITY . . . . . .⎍
WORD
RECOGNIZER
W.R. MODE. . . .ASYNC
FILTER . . . . . .MIN
CH 0 through
15 . . . . . .X (center)
EXTERNAL
QUALIFIER . . .X (center)
PROBE
QUALIFIER . . .X (center)

4. Apply power to oscilloscope mainframe.

Functional Check Procedure

1. Press the RECORD MANUAL RESET and MANUAL TRIGGER pushbuttons (in that order) to obtain display.

2. Adjust Test Oscilloscope intensity and focus controls as desired.

3. Check that four traces are displayed on the crt.

4. Set DATA CHANNELS switch to 0-7.

5. Check that eight traces are displayed in two groups of four traces each.

6. Set DATA CHANNELS switch to 0-15.

7. Check that sixteen traces are displayed in four groups of four traces each.

8. Check that the VERT POS and HORIZ POS controls will position any portion of the displayed traces on screen for any setting of the VERT MAG and HORIZ MAG controls.

9A. (SN B086085—up) Check that sixteen zeros are displayed by the Cursor Data readout (bottom of screen) in groups of four. This will be the case when the Byte Select jumper is set for 4-bit bytes. See step 10.

9B. (SN B086084—below) Check that sixteen zeros are displayed by the Cursor Data readout (bottom of screen) in groups of four.

10A. (SN B086085—up) If the Byte Select jumper is set for 3-bit bytes check that sixteen zeros are displayed in four groups of three bits each and one group of four bits. The Byte Selection function is an internal adjustment which requires removing hte 7D01 from the mainframe and removal of the side covers. Changes should be referred to qualified service personnel.

10B. (SN B086085—below) Set the CURSOR BYTE switch to 3 BIT and check that sixteen zeros are displayed in four groups of three bits each and one group of four bits.

11. Check that the Cursor Intensified Zone can be horizontally positioned on the display by the CURSOR COARSE and FINE POS controls.

12. Check that the Trigger Intensified Zone is approximately centered (horizontally) on the display.

13. Set DATA POSITION switch to POST TRIG.

14. Check that the Trigger Intensified Zone moves toward the left end of the displayed traces.

15. Set DATA POSITION switch to PRE TRIG.

16. Check that Trigger Intensified Zone moves toward the right end of the displayed traces.

17. Set DATA POSITION switch back to CENTER.

18. Set RECORD DISPLAY TIME control to 1 s position (fully counterclockwise).

20. Connect channel 0 probe lead to 4-volt, 1-kilohertz output of oscilloscope calibrator.

19. Check that TRIG'D light goes out and that display disappears.

21. Check that display reappears and that rising edge of channel 0 waveform is approximately centered (horizontally) on display. (Disregard any noise displayed on channels 7-15.)

22. Set TRIGGER SOURCE switch to W.R.

23. Set WORD RECOGNIZER channel 0 switch to HI.

24. Check that rising edge of channel 0 waveform is approximately centered on the display.

25. Connect channel 0 through 7 probe leads to oscilloscope calibrator output.

26. Set WORD RECOGNIZER channel 0 through 7 switches to HI.

27. Check that rising edges of channel 0 through 7 waveforms are approximately centered on the display.

28. Set WORD RECOGNIZER channel 0 through 7 switches to LO.

29. Check that falling edge of channel 0 through 7 waveforms are approximately centered on the display.

30. Set W.R. MODE switch to SYNC.

31. Check that the TRIG'D light goes out and that display disappears (with external clock probe lead disconnected).

32. Set W.R. MODE switch back to ASYNC.

33. Connect external clock probe lead to oscilloscope calibrator output.

34. Remove Data Acquisition Probe from top Data Input Connector (Channel 0-7 and External Clock) and connect to bottom Data Input Connector (Channel 8-15 and Probe Qualifier).

35. Set WORD RECOGNIZER channel 0 through 7 switches to X and channel 8 through 15 and PROBE QUALIFIER switches to HI.

36. Check that rising edges of channel 8 through 15 waveforms are approximately centered on the display.

37. Set WORD RECOGNIZER channel 8 through 15 and PROBE QUALIFIER switches to LO.

38. Check that falling edges of channel 8 through 15 waveforms are approximately centered on the display.

39. Set all WORD RECOGNIZER channel and qualifier switches to X.

40. Remove Data Acquisition Probe from botton Data Input Connector and connect to top Data Input Connector.

41. Disconnect all probe leads from oscilloscope calibrator.

42. Connect oscilloscope calibrator to EXT TRIG/QUALIFIER INPUT.

43. Set WORD RECOGNIZER EXTERNAL QUALIFIER switch to HI.

44. Check that TRIG'D light is on and display is present.

45. Set WORD RECOGNIZER EXTERNAL QUALIFIER switch to LO.

46. Check that TRIG'D light is on and display is present.

47. Set WORD RECOGNIZER EXTERNAL QUALIFIER switch to X.

48. Set TRIG SOURCE switch to EXT.

49. Check that TRIG'D light is on and display is present.

50. Set EXT TRIG POLARITY switch to ⌉.

51. Check that TRIG'D light is on and display is present.

52. Disconnect oscilloscope calibrator from EXT TRIG/QUALIFIER INPUT.

53. Set TRIGGER SOURCE switch to CH 0.

54. Connect channel 0 and external clock probe leads to 4-volt, 1-kilohertz signal from the oscilloscope calibrator.

55. Set DATA CHANNELS switch to 0-3.

56. Check that a display is present for each position of the SAMPLE INTERVAL switch.

57. Set SAMPLE INTERVAL switch to EXT.

58. Check that a display is present for both positions of the EXT CLOCK POLARITY switch.

59. Disconnect probe leads from oscilloscope calibrator output.

This completes the Functional Check Procedure.

@ JAN 1979

THEORY OF OPERATION

This section of the manual contains a description of the circuitry used in the 7D01 Logic Analyzer. The description begins with a discussion of the instrument using the Block Diagram (Fig. 3-1) to show the major interconnections between circuits. Each circuit is then described in detail in the Detailed Circuit Description.

BLOCK DIAGRAM DESCRIPTION

The Word Recognizer circuit performs three major functions; it provides the threshold voltage and input buffering for the data signals from the Data Acquisition Probe(s), and allows triggering of the 7D01 (and/or external equipment) on any preset, parallel-data "word" of up to 16 bits. The threshold Voltage stage sets the offset voltage used by the Data Acquisition Probe. The Input Buffer stage provides isolation between the Data Acquisition Probe and the Memory and Word Recognizer gates. The Word Recognizer stage provides a HI output when the logic states of the input data channels match the states set by the corresponding Word Recognizer switches (CH 0-15). The output from the Word Recognizer can be used internally to trigger the 7D01, or externally by other equipment or plug-in units. Two Qualifier inputs can be used to enable Synchronous Mode, the Word Recognizer output signal goes HI on the first active edge of the External Clock signal after all Word Recognizer conditions have been satisfied (including External Qualifier and/or Probe Qualifier). In the Asynchronous Mode, the Word Recognizer output signal goes HI as soon as all Word Recognizer conditions have been satisfied. A variable Filter inhibits the Word Recognizer output for up to 300 nanoseconds to prevent false triggering on very brief signals when in the Asynchronous Mode. The Word Recognizer output signal is connected to the TRIGGER SOURCE switch and to the front-panel W.R. OUT connector.

The Clock Qualifier (SN B086085 and up) circuit provides control over data storage into the memory when the SAMPLE INTERVAL switch is set to EXT. Storage will occur only when an external qualifying signal (from EXT TRIG/QUALIFIER or PROBE QUALIFIER) matches the CLOCK QUALIFIER switch setting.

The Memory circuit stores and displays input data at a rate set by the Time Base circuit. The Memory circuit consists of sixteen 256-bit RAM (Random Access Memories) and the required Data Selector/Latches and control circuits. Depending on the setting of the DATA CHANNELS switch, the Memory circuit will store and display 1016 bits of data from each of four channels (0-3), 508 bits from each of eight channels (0-7), or 254 bits from each of sixteen channels (0-15). The Memory Store/Display mode is controlled by the Trigger circuit.

The Trigger circuit controls the Store and Display modes of the Memory cirucit and the position of the displayed data realtive to the trigger. (The trigger point is shown on the display as an intensified zone.)

The Time Base circuit provides the store clock (set by the SAMPLE INTERVAL switch) and the display clock signals used by the Memory circuit. An External Clock signal (from the Data Acquisition Probe) can also be selected by the SAMPLE INTERVAL switch.

The Vertical Output circuit provides the parallel-to-serial conversion required to display the stored data on the crt. The vertical position and magnification of the display are adjusted by the VERT POS and MAG controls. The vertical offset between displayed channels is also generated by the Vertical Output circuit.

The Horizontal Output circuit generates the horizontal-sweep and the crt-blanking waveforms for the display.

The Cursor circuit provides an intensified zone on the display and a readout of the logic state (1 or 0) of each displayed channel. The position of the cursor on the display is set by the CURSOR COARSE and FINE POS controls. The cursor readout can be displayed in 3-bit or 4-bit bytes. The position of the cursor, relative to the trigger, is also shown on the crt readout.

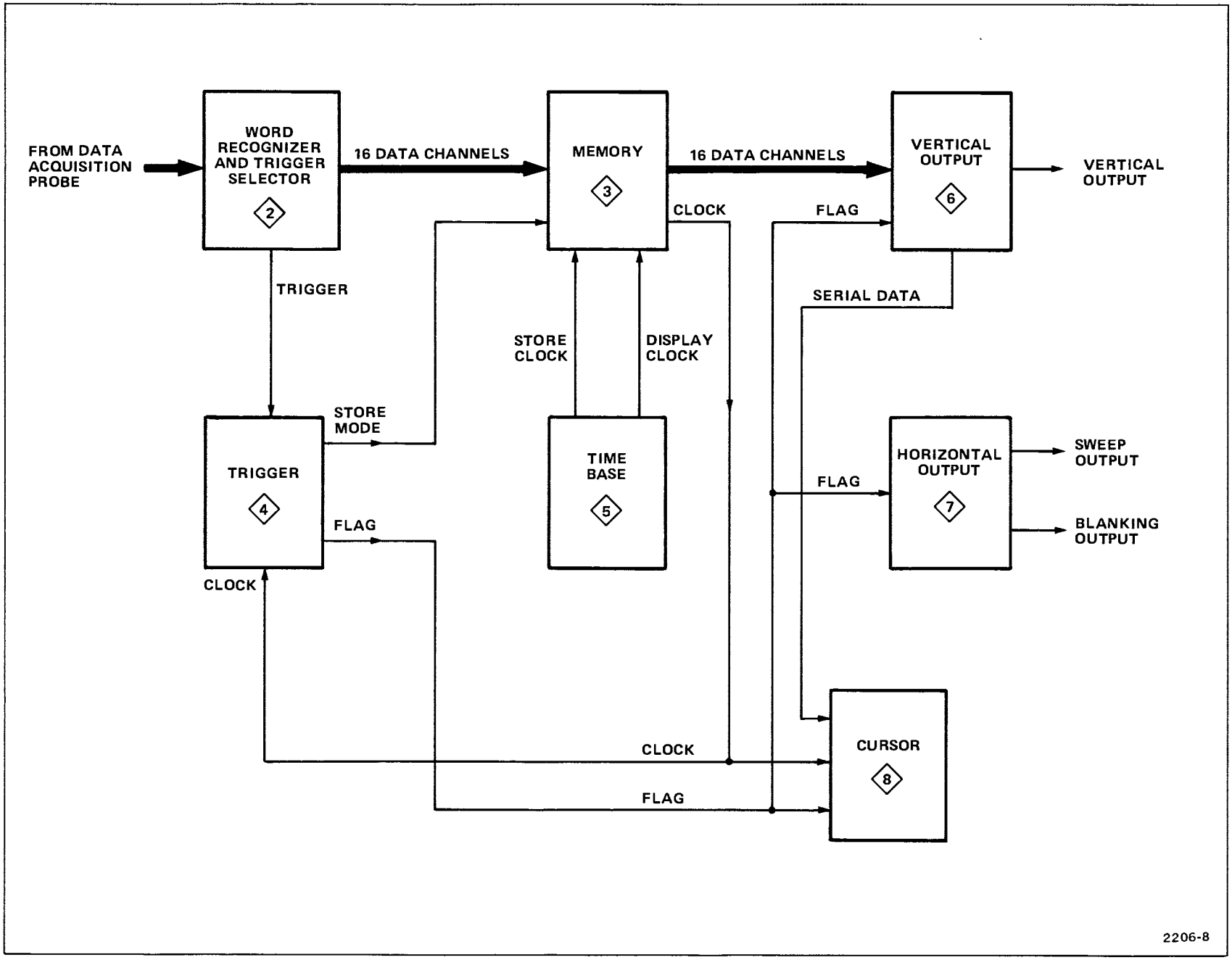

Figure 3-1. 7D01 Block Diagram.

DETAILED CIRCUIT DESCRIPTION

Complete schematic diagrams are given in the Diagrams and Circuit Board Illustrations section in the rear of this manual. Refer to these diagrams throughout the following circuit description.

FRONT PANEL WIRING ①

The Front Panel Wiring diagram shows the front-panel controls, switches, indicators, and connectors and their connections to the circuit boards. Also shown are the interconnecting cables and the connector numbers.

WORD RECOGNIZER ②

The Word Recognizer performs three major functions; it provides the threshold voltage and input buffering for the data signals from the Data Acquisition Probe(s), and allows triggering of the 7D01 (and/or external equipment) on any preset, parallel-data "word" of up to 16 bits.

Threshold Voltage

The Threshold Voltage stage sets the dc offset voltage used by the Data Acquisition Probe. The THRESHOLD VOLTAGE switch, S1275, selects either VAR or TTL threshold voltage for each probe. The wiper of R1270 is connected to R1274 and the MONITOR jack, J1274. The threshold voltage is inverted, divided, and offset by U1276. The approximate offset voltage at the output of U1276 can be calculated using the following formula:

$$\text{Offset Voltage} = \frac{\text{Reference Voltage—Threshold Voltage}}{4}$$

Example:

According to this formula, the offset voltage for a +2.5-volt threshold level (MOS) will be approximately:

$$\text{Offset Voltage} = \frac{(-4.7 - 2.5)}{4} - 4.7 = -6.5 \text{ volts.}$$

The offset voltage is connected to the bottom of the probe input-signal attenuator (see Fig. 3-2) to change the effective comparison voltage of the probe comparator.

Example:

Using the offset voltage of -6.5 volts from the previous example, the effective comparison voltage (threshold voltage) can be calculated as follows:

Threshold Voltage = (R1/R2) (Reference Voltage—Offset Voltage) + (Reference Voltage)

Threshold Voltage = 4 [-4.7—(-6.5)] + (4.7) = 4 (-4.7 + 6.5) -4.7 = +2.5 volts

Input Buffers

The push-pull output signal from the probe comparator is connected through J110 or J115 to the Input Buffer stage of the 7D01 Word Recognizer circuit. The Input Buffer stage consists of U1215, U1218, U1224, U1234, U1236, and U1248. One output from each buffer is connected to the Memory circuit through P1212, P1213, P1224, P1225, P1236, P1237, P1248, or P1249. One output from the Channel 0 buffer is also connected to the Trigger Selector stage of the Word Recognizer circuit. Both outputs from each buffer are connected to the Word Selector stage.

Word Selector

The push-pull data signal from each Input Buffer is connected to the corresponding Word Recognizer channel switch. When a switch is set to the HI position, the inverted output of the corresponding buffer is connected to one input of

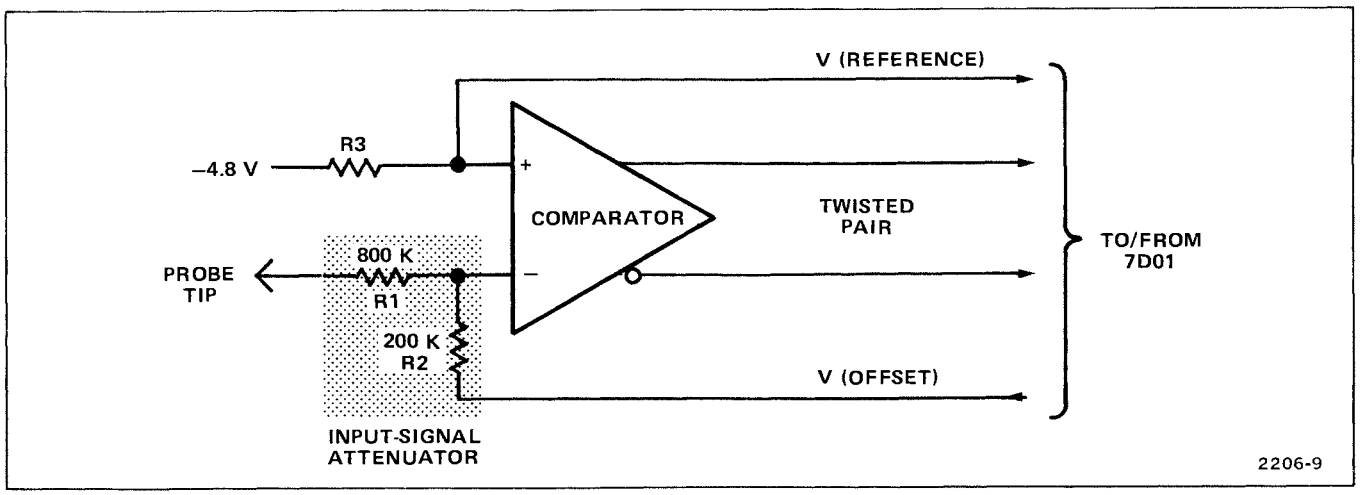

Figure 3-2. Equivalent circuit for one channel of P6451 Data Acquisition Probe.

gate U1252 or U1254. When a switch is set to the LO position, the non-inverted buffer output is connected to the gate input. When the data signals for all the channels (including the PROBE QUALIFIER) match the positions of their respective channel switches, all of the inputs of gates U1252 and U1254 will be LO. The outputs of the gates (pins 15 and 2 of U1252 and U1254) and the output of EXTERNAL QUALIFIER switch S1256 are connected together in a "wired-OR" configuration. When the inputs of the gates and S1256 are all LO, the $\overline{\text{word}}$ signal will be LO. The $\overline{\text{word}}$ signal is connected to the inputs of buffer U1262D, and to the D input of flip-flop U268B. At this point, the operation of the Word Recognizer depeends on the position of the W.R. MODE switch.

ASYNCHRONOUS MODE. With the W.R. MODE switch, S1260, set to ASYNC, the path for the $\overline{\text{word}}$ signal is through U1262D and U1262C. Buffer U1262D isolates the $\overline{\text{word}}$ signal from the Filter and output circuitry. The Filter circuitry consists of C1267, R1267. With the W.R. MODE switch, S1260, set to ASYNC, the path for the $\overline{\text{word}}$ signal is through U1262D and U1262C. Buffer U1262D isolates the $\overline{\text{word}}$ signal from the Filter and output circuitry. The Filter circuitry consists of C1267, R1267. With the W.R. MODE switch, S1260, set to ASYNC, the path for the $\overline{\text{word}}$ signal is through U1262D and U1262C. Buffer U1262D isolates the $\overline{\text{word}}$ signal from the Filter and output circuitry. The Filter circuitry consists of C1267, R1267ng edge of the $\overline{\text{word}}$ signal is the active edge, increasing the fall time effectively blocks any pulse narrower than the fall time (e.g., if the fall time is 200 nanoseconds, a 100-nanosecond pulse would not pass to the output stage). The buffered $\overline{\text{word}}$ signal is then connected to one input (pin 10) of AND-gate U1262C. With the other input (pin 11) of U1262C held HI by the W.R. MODE switch, U1262C passes the gated $\overline{\text{word}}$ signal to the output stage.

SYNCHRONOUS MODE. With the W.R. MODE switch set to SYNC, the path for the $\overline{\text{word}}$ signal is through D-type flip-flop U268B. With the Reset input (pin 13) LO, the flip-flop is enabled. The Q output of U268B is set HI by a LO pulse from the Reset stage of the Trigger circuit. As long as the $\overline{\text{word}}$ signal is HI, the Q output remains HI. When the word signal goes LO, the next rising edge of the external clock sync signal will drive the Q output LO. The Q output of U268B is connected to the output of U1262C through delay line DL 1262 to form a "wired-OR". Since the output of U1262C is held LO by the LO on pin 11, the LO on the Q output of U268B will allow both outputs to drop to a LO level. This LO signal (gated $\overline{\text{word}}$ signal) is connected to one input (pin 13) of U269C and to the Output stage.

Output

The Word Recognizer Output stage consists of two output amplifiers: Q1208-Q1212, and Q1201-Q1204-Q1206. Transistors Q1208 and Q1212 provide a push-pull output signal to the mainframe + and - Trigger Out lines. When the gated $\overline{\text{word}}$ signal goes LO, Q1208 turns off and Q1212 turns on, driving plug-in connector pins A13 HI and B13 LO. The gated $\overline{\text{word}}$ signal is also connected to the base of Q1202. The LO signal increases current through Q1202, cutting off Q1204, and driving the base of Q1206 HI. Emitter-follower Q1206 drives the signal at the W.R. OUT connector HI.

Trigger Selector

The Trigger Selector stage consists of Q1254, Q1258, U1262A, U1262B, Q1262, and U269C. The signal connected to the EXT TRIG/QUALIFIER INPUT is compared to a +1.4-volt dc level by Q1254-Z1258. One output of Q1254-Q1258 is connected through EXT TRIG POLARITY switch S1258 to pin 6 of AND-gate U1262B. When TRIGGER SOURCE switch S1265 is in the EXT position, the collector of Q1262 is HI. The HI on the collector of Q1262 enables U1262B, which couples the external trigger signal to the Trigger Output line (P113, pin 3). When the TRIGGER SOURCE swithc is in the CH 0 position, Q1262 is cut off (collector LO), disabling U1262B. The HI level at pin 5 of U1262A enables the gate which couples the CH 0 signal from pin 3 of U1215A to the Trigger Output line. When the TRIGGER SOURCE switch is in the W.R. (Word Recognizer) position, Q1262 is cut off and pin 12 of U269C falls to a LO level. With pin 12 LO, U269C inverts the gated $\overline{\text{word}}$ signal and couples it to the Trigger Output line.

MEMORY ③

The Memory Circuit stores the input data in sixteen 256-bit RAM's (random access memories) at a rate set by the Time Base circuit or external clock signal. The Store/Display mode of the Memory circuit is controlled by the Trigger circuit.

CLOCK QUALIFIER (SN B086085 and up)

The outputs of the Clock Qualifier stage, U1513, are connected in a wired-or configuration with the external store signal at pins 6 and 10 of U108A and U108B. All three signals must be LO for data storage to occur. When the CLOCK QUALIFIER selector, S1501, is set to HI, U1513B is enabled, while U1513A is disabled and the clock qualifier signal is clocked into U1513B by the External Clock Sync line from U106C-14. When the qualifying signal is HI, the Q output of U1513B will be LO, allowing data storage. Circuit operation with the CLOCK QUALIFIER selector set LO is essentially the same, with the Q output of U1513A providing the qualifying signal. CR1504 disables both U1513A and U1513B when the CLOCK QUALIFIER selector is set to OFF.

STORE/DISPLAY CLOCK GATE
U110

PIN NUMBER →	INPUTS 11	10	7	5	OUTPUTS 14*	2
	X	HI	LO	HI	LO	LO
	X	HI	LO	LO	HI	HI
	HI	LO	HI	X	LO	LO
	LO	LO	HI	X	HI	LO

* ALSO PINS 12, 3, AND 4
X INDICATES EITHER STATE

1967-54

Figure 3-3. Truth Table for Store/Display Clock Gate.

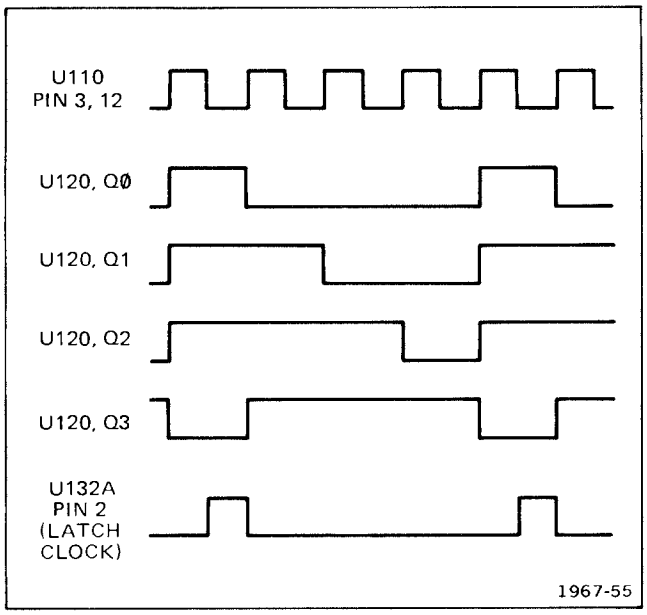

Figure 3-4. Latch Clock timing for 4-channel operation.

U268B in the Word Selector stage of the Word Recognizer circuit. The outputs of U106A and U106B are also connected to pins 5 and 9 of gates U108A and U108B, respectively.

When the SAMPLE INTERVAL switch is in the EXT position, the external store signal at pins 6 and 10 of U108A and U108B is LO. With one input of each gate LO, the gates are enabled. (Pins 7 and 11 of U108 are LO during Store mode.) The output signal from U106A or U106B is inverted and coupled through U108A or U108B. The outputs of U108A, U108B, U110A, and U110B are connected together in "wired-OR" configurations. A HI output from any of the gates will drive the output lines HI. When the SAMPLE INTERVAL switch is not in the EXT position, the external store signal is HI, disabling U108A and U108B. When the 7D01 is in the Store mode, the store signal from the Trigger circuit is HI. The store signal is connected to pin 10 of U110B and pin 6 of U136B. Exclusive-OR gate U136B inverts the store signal and connects it to pin 7 of U110A and pins 7 and 11 of U108. When the store signal is HI, U110B is disabled and U110A is enabled. U110A couples the store clock signal from the Time Base circuit.

Latch Clock

The Latch Clock, U120, U132A, and U136A, strobes data into the Data Latch from the Data Selector. The timing of the Latch Clock output depends on the setting of the DATA CHANNELS switch.

FOUR CHANNEL. Figure 3-4 shows the timing of the Latch Clock outputs for 4-channel operation. When DATA CHANNELS switch S1218 is set for 4-channel operation, pins 12, 11, and 9 of U120 are held HI. When the Q2 output of U120 (also connected to pin 10, function select input) is LO, the next rising edge of the clock transfers the data at the DØ through D3 inputs to the outputs. When the data from the DATA CHANNELS switch is transferred to the outputs, the QØ, Q1, and Q2 outputs go HI (the D3 input is open or LO). A HI level at the S1 input (pin 10) sets U120 into the shift-left mode. Each rising edge of the clock signal moves the data at each output of U120 to the next output, until the Q2 output returns to a LO level. This occurs every fourth clock pulse. Gate U132A produces a HI output when both the Q3 output of U120 and the clock signal are LO. The output of U132A is connected through U136A to the clock inputs of the Data Latch stages. Buffer U136A delays the output of U132A to compensate for propagation delays through the circuitry.

EIGHT CHANNEL. Figure 3-5 shows the timing of the Latch Clock outputs for 8-channel operation. When the DATA CHANNELS switch is set for 8-channel operation, pins 12 and 9 (DØ and D2) of U120 are held HI. When the Q2 output of U120 is LO, the rising edge of the next clock pulse transfers the data at the DØ through D3 inputs to the outputs. When the input data is transferred to the outputs, the QØ and Q2 outputs go HI. A HI level at the S1 input (pin 10) sets U120 into the shift-left mode. The next rising edge of the clock signal moves the LO level at the Q1 output to the Q2 output. With the S1 input LO, U120 is again ready to transfer data from the inputs to the outputs on the next rising edge of the clock signal. The output of U132A is HI when both the Q3 output of U120 and the clock signal are LO. This occurs every second clock pulse.

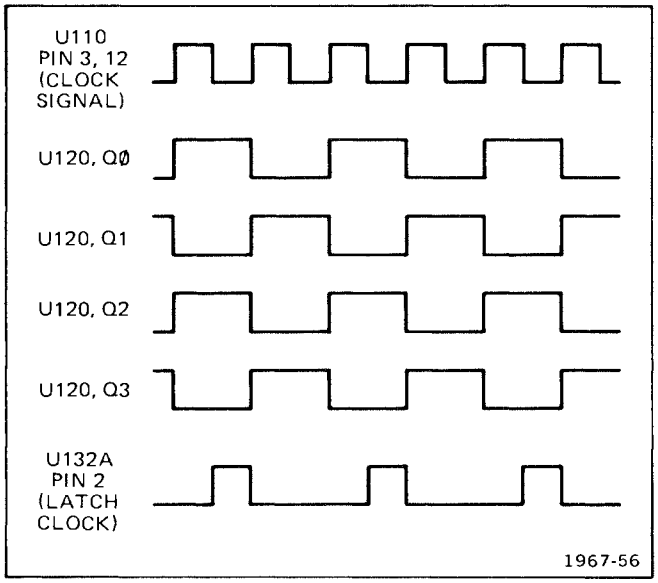

Figure 3-5. Latch Clock timing for 8-channel operation.

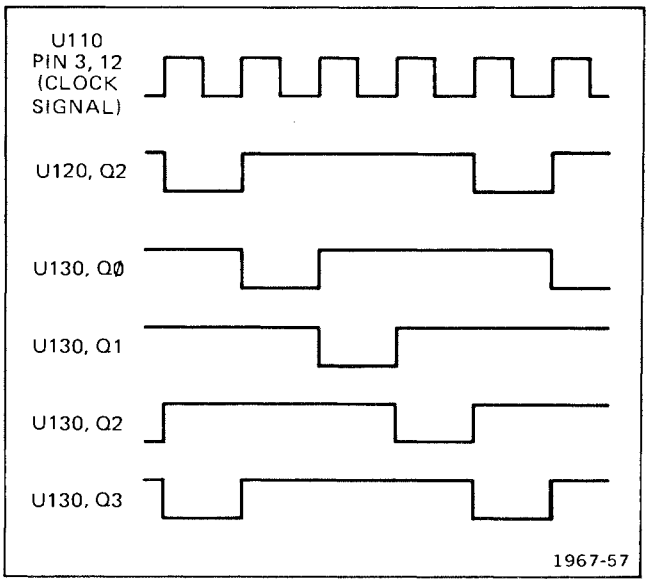

Figure 3-6. Memory Selector timing for 4-channel operation (display time only).

SIXTEEN CHANNEL. When the DATA CHANNELS switch is set for 16-channel operation, all of the data inputs of U120 are held LO. With all the outputs of U120 LO, the output of U132A is HI when the clock signal is LO.

Memory Selector

The Memory Selector, U130, enables the output of each memory IC, in sequence, during the display time. When the $\overline{\text{store}}$ signal (pin 10) is HI, U130 operates as a 4-bit shift register. The data from Q2 of U120 is connected to the DL input of U130 (pin 13). Each rising edge of the clock signal at pin 4 shifts the data at the DL input to the QØ output and the data at each output (Qn) to the next output (Qn + 1). A LO level at an output enables the memory ICs driven by that output (e.g., a LO at QØ enables U258, U358, U458, and U558). When the DATA CHANNELS switch is set for 4-channel operation, one output at a time is LO (see Fig. 3-6). In 8-channel operation, two outputs are LO at the same time (see Fig. 3-7). In 16-channel operation, all four outputs are LO. During the store time, the $\overline{\text{store}}$ signal is LO, and all the outputs of U130 are LO.

$\overline{\text{WE}}$ and LF Clock

The $\overline{\text{WE}}$ (write enable not) and LF clock signals are the same frequency and polarity; the only difference is that the $\overline{\text{WE}}$ signal is only active during the store time (store signal HI).

FOUR CHANNEL. When the DATA CHANNELS switch is set for 4-channel operation, pin 7 of U132B and pin 11 of U132C are held HI, driving their outputs LO. The DATA CHANNELS switch also allows pin 11 of U136C and pin 12 of U136D to fall to a LO level. When the Q1 output of U120 is HI, the outputs of U136C and U136D are HI. The outputs of U136C, U132C, and U132D and the outputs of U136D and U132B are tied together in "wired-OR" configurations. Therefore, when the outputs of U136C and U136D go HI, the $\overline{\text{WE}}$ and LF clock lines go HI, respectively.

EIGHT CHANNEL. When the DATA CHANNELS switch is set for 8-channel operation, the $\overline{\text{WE}}$ and LF Clock stage operates the same as in 4-channel operation except that pin 11 of U136C and pin 12 of U136D are held HI. When the Q1 output of U120 is LO, the outputs of U136C and U136D are HI.

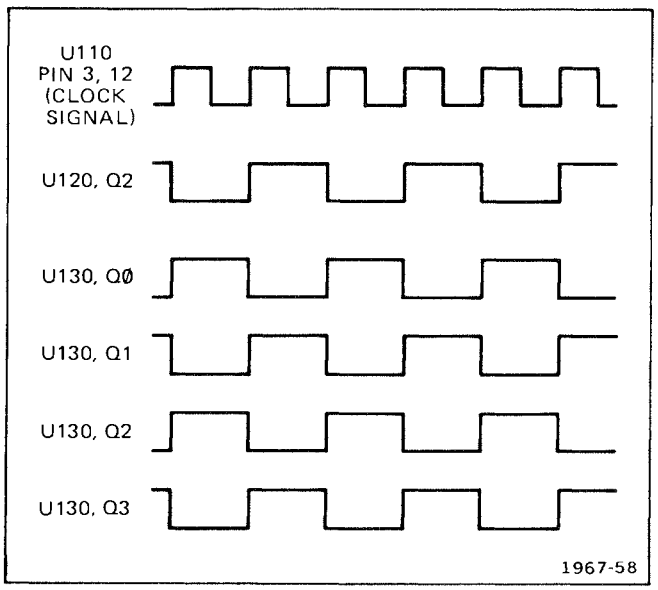

Figure 3-7. Memory Selector timing for 8-channel operation (display time only).

SIXTEEN CHANNEL. When the DATA CHANNELS switch is set for 16-channel operation, pin 7 of U132B, pin 11 of U132C, pin 11 of U136C, pin 12 of U136D, and the Q1 output of U120 are all LO. With both inputs of U136C and U136D LO, their outputs are LO. With one input of U132B and U132C LO, the $\overline{WE}$ and LF clock lines will be HI when the clock signal (pins 6 and 10) is LO. When the store signal is LO (Display mode), the output of U132D is HI, holding the $\overline{WE}$ line HI.

Address Counter

The Address Counter, U140 and U150, selects the memory location where each data bit is stored. The Address Counter is a synchronous, 8-bit (÷256) binary counter, which is reset to zero at the beginning of each store cycle. The AØ through A7 outputs are connected to each memory IC.

Data Selector

The Data Selector stage selects the channels, and arranges the data to be connected to the memory ICs through the Data Latch. The operation of the Data Selector depends on the setting of the DATA CHANNELS switch.

FOUR CHANNEL. When the DATA CHANNELS switch is set for 4-channel operation, pin 10 of U235 is held HI. With pin 10 HI, U235 functions as a 4-bit shift register. Channel 0 data connected to pin 13 of U235 is shifted to the QØ output on the first rising edge of the clock signal at pin 4. The data at pin 13 moves through the shift register until the first data bit is at the Q3 output (four clock pulses). The shift register then has four data bits stored in sequence, ready to be read into the Data Latch. In 4-channel operation, U225 is not used.

EIGHT CHANNEL. When the DATA CHANNELS switch is set for 8-channel operation, pin 10 of U235 is LO and pin 9 of U225 is HI. With pin 10 held LO, U235 functions as a 4-bit latch. The channel 0 data connected to pin 12 of U235 is transferred to the QØ output at pin 14 on the first rising edge of the clock signal at pin 4. The level at the QØ output is connected back to the D1 input at pin 11 through pins 6 and 1 of U225. The next rising edge of the clock signal transfers the level at the DØ input to the QØ output, and transfers the level that had been at the QØ output to the Q1 output. The same operations occur with the channel 4 data at pin 9 of U235, resulting in two bits of channel 0 data (QØ and Q1 outputs) and two bits of channel 4 data (Q2 and Q3 outputs) stored in sequence, ready to be read into the Data Latch.

SIXTEEN CHANNEL. When the DATA CHANNELS switch is set for 16-channel operation, pin 9 of U225 and pin 10 of U235 are both LO. With pin 10 held LO, U235 functions as a 4-bit latch. With pin 9 of U225 held LO, the data from channel 8 and channel 12 is connected through pins 5 and 3 of U225 to the D1 and D3 inputs of U235, respectively. Each rising edge of the clock signal transfers the data at the inputs of U235 to its outputs.

Data Latch

The Data Latch stage transfers the data from the outputs of the Data Selector to the inputs of the 4 x 256 Bit Memory on the rising edge of the latch clock signal (pin 4).

4 X 256 Bit Memory

The 4 x 256 Bit Memory consists of four RAM's (random access memories) and three gates. The RAM's (U252, U254, U256, and U258) are 256-bit memory units which can store one, two, or four channels of data, depending on how the data is presented by the Data Selector. If the DATA CHANNELS switch is set for 4-channel operation, the 4 x 256 Bit Memory stores 1024 bits of data from channel 0. When set for 8-channel operation, the 4 x 256 Bit Memory stores 512 bits of data from channel 0 and 512 bits of data from channel 4. When set for 16-channel operation, the 4 x 256 Bit Memory stores 256 bits each from channels 0, 4, 8, and 12. The memory location where each bit of data is stored is controlled by the Address Counter.

In the Display mode, a LO level on pin 5 enables the Q output of each memory IC in sequence. The outputs of the memory IC's are combined by AND-gates U260A, U260D, and U260B, as controlled by the DATA CHANNELS switch. In 4-channel operation, pin 5 of U260A, pin 12 of U260D, and pin 6 of U260B are HI. Therefore, the data from all four Q outputs are connected to the channel 0 data output line (J120, pin 13). In 8-channel operation, pins 5 and 6 (U260A and U260B) are HI. With pins 5 and 6 of U260 HI, the outputs of U252 and U254 are connected to pin 13 of J120 and the outputs of U256 and U258 are connected to pin 4 of J120 (channel 4 data output line). In 16-channel operation, pins 5, 12, and 6 of U260 are all LO; therefore, the data at the output of U252 is connected to the channel 0 data output line, the output of U254 is connected to the channel 8 data output line, etc.

TRIGGER ④

The Trigger circuit controls the Store and Display modes of the 7D01 and the position of the displayed data relative to the trigger.

Auto Record

The Auto Record stage controls the time that a display is presented before the 7D01 returns to the Store mode. The display time is set by the DISPLAY TIME control, R605. Capacitor C606 charges through R604 and R605. After

approximately one time constant, Q606 conducts, discharging C606 and pulling pin 4 of U610A LO. When pin 4 of U610A is LO, pin 3 is HI. The HI at pin 3 of U610A sets the Q output (pin 15) of U621B HI and resets the $\overline{Q}$ output (pin 3) of U621A HI. The $\overline{Q}$ output of U621A is connected back to the emitter of Q602. A HI at the emitter of Q602 causes Q602 and Q604 to conduct, disabling the timing circuit for Q606. Therefore, Q606 only operates when the 7D01 is in the Display mode (pin 3 of U621A LO).

A HI level pulse at pin 3 of U610A can also be obtained by pressing the MANUAL push button, S606. NOR-gates U608C and U608D are connected as a set-reset flip-flop, which prevents contact bounce in S605A from affecting the rest of the circuitry. When S605A is pressed, pin 12 of U608D goes HI and pin 10 of U608C goes LO. The resultant LO on pin 15 of U608D is connected to pin 5 of U610A, producing a HI level at pin 3.

Trigger Latch

The Trigger Latch stage, U615A and U615B, latches on the first trigger signal after reset when P617 is in the First Trigger (lower) position, or after reset and one full memory cycle when P617 is set for Full Data (upper position). The trigger signal is connected to pin 6 of U615A. If the reset signal (pin 4) and the trigger disable signal (pin 9) are both LO, the trigger signal clocks the HI level at the data (D) input of U615A to the Q output (pin 2).

The Q output of U615A is connected to the base of Q620 and the D input of U615B (pin 10). When the Q output goes HI, Q620 turns on, lighting LED (light-emitting diode) DS620. The HI from the Q output of U615A is also clocked into U615B on the next rising edge of the hf clock signal (pin 11), driving the $\overline{Q}$ output (pin 14) LO.

Trigger LF (Low Frequency) Clock

The LO level at the $\overline{Q}$ output of U615B enables the Trigger LF Clock stage (U617B, U617C, U622, and U608B), which divides the hf clock signal by 4, 2, or 1, depending on the position of the DATA CHANNELS switch.

FOUR CHANNEL. When the DATA CHANNELS switch is set to 0-3, the DØ, D1, and D2 inputs of U622 are all HI. When the S1 input is LO, the shift register loads the data at the DØ, D1, and D2 inputs to the QØ, Q1, and Q2 outputs, respectively. With the Q2 output (and therefore the S1 input) HI, the shift register returns to shift-left operation and starts clocking in LO's from the DL input on the rising edge of the HF clock signal. When the LO from the DL input reaches the Q2 output (and the S1 input), the shift register loads the HI data from the DØ, D1, and D2 inputs. This full cycle requires four HF clock pulses, resulting in a trigger LF clock which is one-fourth the frequency of the HF clock (one clock period HI, three clock periods LO).

EIGHT CHANNEL. When the DATA CHANNELS switch is set to 0-8, the DØ and D2 inputs of U622 are HI and the D1 input is LO. The first clock pulse loads the data into the shift register, driving the Q2 output and the S1 input HI. With the S1 input HI, the shift register returns to shift-left operation. The next clock pulse shifts the LO at the DL input to the QØ output and the LO at the Q1 output to the Q2 output. The LO at the Q2 output and the S1 input puts the shift register back into load operation. The third clock pulse loads the data at the DØ, D1, and D2 inputs to the outputs. The complete load-shift operation requires two clock pulses, resulting in a trigger LF clock signal which is one-half the HF clock frequency.

SIXTEEN CHANNEL. When the DATA CHANNELS switch is set to 0-15, the DØ, D1, and D2 inputs of U622 are all LO, holding the QØ, Q1, and Q2 outputs LO. The HF clock signal is then connected to the trigger LF clock line through U617B (input pins 10 and 11 are both LO, enabling U617B).

Trigger Position Counter

The Trigger Position Counter determines the position of the displayed data, relative to the trigger signal, by providing a delay between the triggering event and the start of Display mode.

(If Display mode started immediately after the trigger signal, the memory would contain only data which had been stored before the trigger signal. By delaying the start of Display mode, the memory will contain data stored before and after the trigger signal.)

Counters U623 and U624 are loaded with a preset binary number when the S2 inputs are LO. When the trigger signal drives the Q output of U615A (pin 2) HI, the counters start counting trigger LF clock pulses until the $\overline{C\ out}$ output of U624 (pin 4) goes LO. The LO level at pin 4 of U624 is connected to one input (pin 7) of U632B and to the D input (pin 10) of U619B. Gates U632B and U632C prevent a very short duration "glitch" on the $\overline{C\ out}$ line from being coupled to the rest of the circuit.

When the $\overline{C\ out}$ output of U624 (pin 4) is LO and the QØ output (pin 14) is HI, the $\overline{Q}$ output of U619B (pin 14) is reset HI. The next trigger LF clock pulse clocks the LO level at the D input (pin 10) into flip-flop U619B, holding the $\overline{Q}$ output HI. At this point, the $\overline{C\ out}$ output of U624 goes HI and the QØ output goes LO, resulting in a LO at the output of U632B (pin 3). With the D input of U619B HI, the next trigger LF clock pulse drives the $\overline{Q}$ input (pin 14) back LO. Therefore, the $\overline{Q}$ output of U619B goes HI for two trigger LF clock pulses on the terminal count of U624 (all Q outputs HI).

Store/Display Flip-Flop

When the $\overline{Q}$ output of U619B goes HI, the next memory LF clock pulse drives the Q output of U619A (pin 2) HI. When the Q output of U619A goes HI, the Q output of U621A (pin 2) is driven HI and the $\overline{Q}$ output (pin 3) is driven LO, switching the memory from Store mode to Display mode. The next reset pulse from the Q output of U621B (pin 15) resets the $\overline{Q}$ output of U621A back LO.

Trigger Disable

FULL DISPLAY. Dual flip-flop U740 prevents the Trigger circuit from accepting a trigger signal before the Memory circuit has gone through one full store cycle to ensure that all the data in the memory is new data (data stored during the current store cycle). The Q output of U740A (pin 2) is set HI by the reset pulse applied to the set input (pin 5). The HI level at the Q output (pin 2) disables U615A and U615B. The Q output of U740A (pin 2) stays HI until the LO pulse on the $\overline{\text{Address Count Carry}}$ line toggles U740A.

FIRST TRIGGER. The Trigger Disable function can be defeated by moving P617 to the First Trigger (lower) position. With P617 in the First Trigger position, any data remaining in the memory from a previous store cycle will be blanked out on the display. If the output of U632B goes HI before the $\overline{\text{Address Count Carry}}$ pulse arrives at the clock input of U740 (pin 9), the Q output of U740B (pin 15) is set HI, disabling the unblanking stage of the Horizontal Output circuit. This keeps the display blanked until the $\overline{\text{Address Count Carry}}$ pulse switches the Q output (pin 15) LO again, allowing the data to be displayed on the crt.

Trigger Intensify

The trigger point is shown on the display by an intensified zone, generated by U625 and Q628. Quad exclusive-OR gate U625 detects when the output states of U624 match the data which was loaded into U624 when the unit was triggered. When the outputs of U624 match the data on pins 2, 3, and 4 of P632, the output of U625 goes LO. The LO signal at the output of U625 turns Q628 on, resulting in an intensified zone on the display. The amount of increased intensity can be adjusted by R625.

TIME BASE ⟨5⟩

The Time Base circuit generates the store clock and display clock signals. The Time Base circuitry consists of a 100 MHz Oscillator, a series of counters with divide-by-two and divide-by-five outputs, and data selectors. The 100 MHz Oscillator is controlled by crystal Y800. The output of the 100 MHz Oscillator is connected to data selector U820 and to the input of divide-by-two and divide-by-five counter U810. The store clock signal is selected from the outputs of the frequency-divider counters by the data selectors. The SAMPLE INTERVAL switch sets the "address" of the desired counter output. The display clock signal is taken from the QØ (2 μs) output of counter U814.

VERTICAL OUTPUT ⟨6⟩

The Vertical Output circuit provides the parallel-to-serial conversion and channel offset required to display the stored data on the oscilloscope crt.

Channel Counter

The Channel Counter, U628, U632A, and U632D, determines the data channel to be coupled through the Parallel-to-Serial Converter to the Vertical Output Amplifier. Four-bit counter U628 counts flag pulses from the Trigger circuit. The output of the Channel Counter depends on the format selected by the DATA CHANNELS switch (shown in Diagram 3). When set for 4-channel operation, pin 12 of U632D and pin 5 of U632A are both HI. A HI level on pin 12 of U632D drives pin 9 HI and pin 15 LO. The HI level on pin 5 of U632A drives pin 2 LO. When set for 8-channel operation, only pin 12 of U632D is HI, holding pin 9 HI and pin 15 LO. The Q2 output of U628 is inverted by U632A. When set for 16-channel operation, pin 12 of U632D and pin 5 of U632A are both LO. The Q2 output of U628 is inverted by U632A. The Q3 output is coupled through U632D to pin 9 and is inverted at pin 15.

Parallel-to-Serial Converter

The Parallel-to-Serial Converter, U570 and U572, is actually a 16-channel data selector. The data channel to be connected to the Q output (pin 15) is determined by the binary count on the address (pins 7, 9, and 10) and enable not ($\overline{EN}$) lines. Refer to Figure 3-8 for the relationship between the binary output of U628 and the data channel selected by the Parallel-to-Serial Converter.

BINARY OUTPUT (U628)				CHANNEL DISPLAYED		
QØ	Q1	Q2	Q3	4 CH	8 CH	16 CH
LO	LO	LO	LO	0	4	12
HI	LO	LO	LO	1	5	13
LO	HI	LO	LO	2	6	14
HI	HI	LO	LO	3	7	15
LO	LO	HI	LO	0	0	8
HI	LO	HI	LO	1	1	9
LO	HI	HI	LO	2	2	10
HI	HI	HI	LO	3	3	11
LO	LO	LO	HI	0	4	4
HI	LO	LO	HI	1	5	5
LO	HI	LO	HI	2	6	6
HI	HI	LO	HI	3	7	7
LO	LO	HI	HI	0	0	0
HI	LO	HI	HI	1	1	1
LO	HI	HI	HI	2	2	2
HI	HI	HI	HI	3	3	3

2206-10

Figure 3-8. Binary output of U628 versus channel displayed.

Channel Offset

The Channel Offset stage provides the vertical offset for each channel of data displayed on the crt of the oscilloscope. The amount of offset is determined by the binary count at the output of the Channel Counter. Each of the four output lines control one of the Channel Offset Comparators (e.g., pin 15 of U632D controls comparator Q652-Q654). Each comparator applies a current, determined by its current setting resistor (e.g., R653 sets the current for comparator Q652-Q654), to the Vertical Output Amplifier. The total offset is determined by the number of comparators conducting current to the Vertical Output Amplifier, and the amount of current each comparator is conducting.

Vertical Output Amplifier

The Vertical Output Amplifier combines the data and channel offset signals, and provides a push-pull output signal for the oscilloscope mainframe. The data signal from U570/U572 is coupled through Q676 and Q678 to the base of Q684. The vertical position of the display is set by VERT POS control R680, which controls the offset current through Q694. Transistors Q682 and Q684 convert the single-ended signal at the base of Q684 to a push-pull output signal at plug-in connector pins A11 and B11.

HORIZONTAL OUTPUT ⟨7⟩

The Horizontal Output circuit generates the X-axis (sweep) and Z-axis (blanking) signals needed to produce a display on the crt of the associated oscilloscope.

Sweep Generator

When the flag signal (base of Q732) is HI, Q732 and Q750 conduct, discharging C750. When the flag signal drops, Q732 and Q750 stop conducting and allow C750 to start charging in a linear negative ramp. The charge rate of C750 is determined by the current through Q722, which is set by R714, R715, and/or R718. Transistors Q714 and Q718 determine whether R714 and/or R715 are in the circuit, depending on the position of the DATA CHANNELS switch, S1218. The negative-going ramp is buffered by U752 and coupled through R783 to the emitter of Q784. The position offset current, set by HORIZ POS control R790, is also coupled to the emitter of Q784. The ramp signal is connected through Q784 to the base of Q764. Transistors Q762 and Q764 convert the single-ended ramp signal to a push-pull output signal at plug-in connector pins A11 and B11 to drive the oscilloscope mainframe.

Blanking

The Blanking stage provides retrace blanking for the display, and blanks the display during Store mode. When the flag pulse goes HI (during display time), the output of U608A (pin 2) goes LO. The LO signal at the output of U608A is coupled through Q744 and Q748 to produce a LO pulse at plug-in connector pin A1. This blanks the display during retrace. During store mode, the HI level at the base of Q738 drives the base of Q740 HI. With the base of Q740 HI, the collector of Q740 is LO. The LO signal at the collector of Q740 results in a LO pulse at plug-in connector pin A1, which blanks the display.

Invalid Mode Indicator

The Invalid Mode Indicator causes the light bulb behind the SAMPLE INTERVAL switch to blink on and off if the switch is set to a position which exceeds the maximum operating speed of the Memory circuit. This occurs when the SAMPLE INTERVAL switch is set to 10 ns or 20 ns during 16-channel operation, or is set to 10 ns during 8-channel operation. Either of these switch combinations cause astable multivibrator Q702-Q704 to oscillate. Transistor Q708 is driven by the output at the collector of Q704. When the base of Q708 goes LO, light DS708 turns off.

CURSOR ⟨8⟩

The Cursor circuit provides an intensified zone on the display and a readout of the logic state (1 or 0) of each displayed channel at the cursor position. The position of the cursor on the display is set by the CURSOR COARSE and FINE POS controls. The Cursor readout can be displayed in 3-bit or 4-bit bytes. The position of the cursor, relative to the trigger, is also shown by the crt readout.

Cursor Counter

The CURSOR Position controls (COARSE and FINE POS) are rotary switches which produce a sequence of pulses for each step. The order of the pulses depends on the direction of switch rotation. The output of the FINE POS switch is decoded by NAND-gates U1342 (A, B, C, and D) to produce a LO pulse on one output and a HI level on the other. The outputs (pins 10 and 11) are buffered by U1344C and U1344D and connected to the Count Up and Count Down inputs of U1346. The Carry and Borrow outputs of U1346 are connected through U1344A and U1344B to the Count Up and Count Down inputs of U1356, along with the outputs from U1352C and U1352D. The binary count on U1346, U1356, and U1366 changes in increments of one count for each step of the FINE POS control, or increments of sixteen counts for each step of the COARSE control.

The flag pulse from the Trigger circuit is connected to the base of Q1304, which inverts the flag pulse signal. The inverted flag pulse is buffered by U1322C and ac-coupled to the Count/Load inputs (pin 1) of U1348, U1358, and U1368. The Count/Load inputs are normally held HI (count) by R1361-R1363. The falling edge of the inverted flag pulse drives the Count/Load inputs LO (load) to load the count on U1346, U1356, and U1366 into U1348, U1358, and U1368. Counters U1348, U1358, and U1368

then start counting gated display clock pulses from the output of U1322B. The outputs of U1348 and U1358 are connected to the inputs of gate U1372. The A and B outputs (pins 5 and 9) of U1368 are connected to U1372 through gates U1370B and U1370A. During 4-channel operation, both U1370A and U1370B are enabled to provide a maximum count of 1024. During 8-channel operation, the collector of Q1302 is LO, disabling U1370A to provide a maximum count of 512. During 16-channel operation, the collector of Q1372 is LO, disabling U1370A and U1370B to provide a maximum count of 256. When all inputs to U1372 are HI, the output (pin 9) goes LO. The LO output of U1372 is inverted by U1334D which turns on Q1376. The current through Q1376 causes the crt display to intensify, providing the cursor intensified zone. The relative intensity of the cursor intensified zone is controlled by Cursor Intensity adjustment R1375.

Cursor Position Readout

The position of the cursor (relative to the trigger) is displayed by the crt readout on the top of the crt. The cursor position is the number of gated display clock pulses between the trigger location and the cursor position, with a plus or minus sign determined by which pulse occurred first. Four-Decade Counter U1338 and flip-flop U1328B are reset by the flag pulse from the Trigger circuit (through Q1304, U1322C, and U1322D). The first trigger location pulse from the Trigger circuit, or the first cursor position pulse from the output of U1332D, will be coupled through exclusive-OR gate U1322A to the clock input (pin 11) of flip-flop U1328B. The pulse at pin 11 of U1328B sets the Q output (pin 9) HI and the $\overline{Q}$ output (pin 8) LO. The HI level on the Q output of U1328B enables gate U1332A which starts coupling gated display clock pulses to the four-decade counter, U1338. The second pulse (trigger location or cursor position) to arrive at U1322A clocks the Q output of U1328B back LO, disabling U1332A and stopping the count on U1338. When the Q output of U1328B switches LO, the $\overline{Q}$ output switches HI. The rising edge of the signal at the $\overline{Q}$ output of U1328B is coupled through C1328 to the Transfer input (pin 10) of U1338, which transfers the count to the output latches in U1338. The AØ Output (pin 6) of U1338 is a current signal for the mainframe crt readout system during readout time slots 8, 9, and 10 which provides the digits of the Cursor Position readout display (top of crt). The current reference for the output of U1338 is adjusted by R1335. The characters "TRIG" and a space are generated during timeslots 1, 2, 3, 4, and 5 (e.g., "T" is selected by R1381 and R1391, "R" is selected by R1382 and R1396, etc.). The "+" or "—" sign is selected by the state at the $\overline{Q}$ output (pin 6) of U1328A during time slot 6. Flip-flop U1328A is clocked by the rising edge of the Q output of U1328B. If the cursor position pulse occurs before the trigger location pulse, the D input (pin 2) of U1328A is HI, resulting in a LO at the $\overline{Q}$ output (pin 6) of U1328A. The LO at the $\overline{Q}$ output of U1328A turns on Q1487, producing a "—" sign. If the trigger location pulse occurred first, the $\overline{Q}$ output would be HI, producing a "+" sign.

Cursor Data Readout

The serial data signal is inverted by Q1316 and coupled to the A input (pin 1) of U1402. The cursor position pulse clocks the logic level present at the A input into shift-register U1402. The next cursor position pulse clocks in the logic level from the next channel, until both U1402 and U1408 are filled with data. (Each shift-register output will contain the data at the cursor position from one channel.) The frame pulse (flag ÷ 16) is coupled by Q1412 and U1370C to the clock inputs of latches U1422, U1438, U1454, and U1470. The frame pulse clocks the data at the outputs of U1402 and U1408 to the outputs of the latches. Because the serial data signal was inverted by Q1316, the data at the outputs of the latches will also be inverted. When the output of a latch is LO, a "1" will be selected by the common-base transistor connected to the latch output and the associated resistors.

During 16-channel operation, all sixteen bits are displayed. During 8-channel operation, the gate of Q1484 is held HI, cutting off the readout signals for channels 8 through 15. During 4-channel operation, the gate of Q1484 is HI and the gate of Q1436 is HI, cutting off the readout signals for channels 4 through 15.

The Cursor Data readout is separated into groups of 4 or 3 bits each. The grouping of the Cursor Data is set by BYTE SELECT jumper P1493 (BYTE switch S1493, SN B079999 and below) which controls MOS switches U1494 and U1492C, and U1492D. The MOS switches are electrically closed when the control pin to each switch is H1 (ground). The MOS switches select the time slots to be used for each Cursor Data bit.

Flip-Flop U1410A blanks the Cursor Data readout if the cursor is positioned to the blanked area of the crt display. If the cursor is positioned to a bit which is not displayed on the crt, the sweep gate signal will be LO when the cursor position pulse occurs. With the Data input (pin 2) of U1410A LO, the cursor position position pulse will clock a LO to the Q output (pin 5) of U1410A, turning off Q1486 and cutting off Q1484, Q1452, and Q1436.

The crt display and readout are both blanked during Store mode because no valid information is available at that time. When the store signal from the Trigger circuit is HI, Q1497 and Q1498 are on, pulling the collector of Q1498 HI and cutting off Q1484, Q1452, Q1436, and Q1488.

If the 7D01 is being used in a four-compartment mainframe, the Aux Z-Axis signal is inhibited when the B-horizontal compartment is selected, or when the A-horizontal compartment is being locked out by the mainframe. If the B-horizontal compartment is being displayed, the output of U610C will be HI, cutting off Q1418 and MOS switch U1492B. If the A-horizontal compartment is locked out, the sweep lockout signal will be HI, cutting off Q1416 and U1492B.

A holdoff signal to the mainframe is produced by U1410B, Q1404, and Q1406. The $\overline{\text{frame}}$ pulse toggles the output of U1410B. The output of U1410B is buffered by Q1404 and Q1406 and connected to the mainframe.

POWER SUPPLIES ⟨9⟩

The 7D01 uses the regulated +15, −15, and +5-volt power supplies from the oscilloscope mainframe, and derives the −2 and −4.8-volt supplies from the +15 and −15-volt power supplies.

DC-DC Inverter

The DC-DC Inverter converts power from the +15 and −15-volt power supplies to a high-frequency (approximately 25 kHz) square wave. This square wave is applied to the primary winding of a stepdown transformer. The outputs of the transformer are full-wave rectified and filtered to provide the −4.8-volt supply and a regulated −2-volt supply.

The 25-kHz drive for the inverter is provided by U918. The frequency and duty cycle are determined by R918, C918, and R919. The output of U918 is coupled through R921 and C921 to the primary winding of T922. The two secondary windings of T922 are connected to the inverter power transistors, Q926 and Q928 which drive the center-tapped primary winding of inverter transformer T942.

The four secondary windings of T942 are connected together to form two center-tapped outputs. The outputs are then full-wave rectified and filtered. The filtered dc output from one pair of secondary windings provides the −4.8-volt supply. The filtered dc output from the other pair of secondary windings is regulated to −2 volts by Q962, Q964, and Q968.

Overload protection for the -2 and -4.8-volt supplies is provided by Q903, Q910, and multivibrator U912. If the -2 or -4.8-volt supply falls toward ground, Q903 or Q910 turns on, turning Q908 off. With Q908 off, multivibrator U912 disables U918 for approximately 1/2 second, then allows it to run for approximately 10 milliseconds. (Under normal load conditions, the -2 and -4.8-volt supplies will stabilize in less than 10 milliseconds.) When the loads on the -2 and -4.8-volt supplies are returned to normal, Q903 and Q910 are both off, and Q908 is conducting. With Q908 conducting, multivibrator U912 is disabled and U918 is allowed to run normally.

MAINTENANCE

This section of the manual contains information for performing preventive maintenance, troubleshooting, and corrective maintenance.

PREVENTIVE MAINTENANCE

Preventive maintenance consists of cleaning, visual inspection, lubrication, etc. Preventive maintenance performed on a regular basis may prevent instrument breakdown and will improve the reliability of the instrument. The severity of the environment to which the instrument is subjected determines the frequency of maintenance. A convenient time to perform preventive maintenance is preceding adjustment of the instrument.

CLEANING

The instrument should be cleaned as often as operating conditions require. Accumulation of dirt on components acts as an insulating blanket and prevents efficient heat dissipation which can cause overheating and component breakdown.

CAUTION

Avoid the use of chemical cleaning agents which might damage the plastics used in this instrument. In particular, avoid chemicals that contains benzene, toluene, xylene, acetone, or similar solvents.

Exterior

Loose dust accumulated on the front panel can be removed with a soft cloth or small brush. Dirt that remains can be removed with a soft cloth dampened in a mild detergent and water solution. Abrasive cleaners should not be used.

Interior

Dust in the interior of the instrument should be removed occasionally due to its electrical conductivity under high-humidity conditions. The best way to clean the interior is to blow off the accumulated dust with dry, low-pressure air.

Remove any dirt which remains with a soft brush or a cloth dampened with a mild detergent and water solution. A cotton-tipped applicator is useful for cleaning in narrow spaces.

VISUAL INSPECTION

The instrument should be inspected occasionally for such defects as broken connections, improperly seated semiconductors, damaged circuit boards, and heat-damaged parts.

The corrective procedure for most visible defects is obvious; however, particular care must be taken if heat-damaged components are found. Overheating usually indicates other trouble in the instrument; therefore, it is important that the cause of overheating be corrected to prevent recurrence of the damage.

LUBRICATION

Generally, there are no components in the instrument that will require lubrication during the life of the instrument.

Toggle Switches

These switches are lubricated and sealed prior to leaving the factory, and cannot be repaired. If a switch becomes electrically noisy or otherwise defective, it should be replaced. Part numbers are given in the Replaceable Electrical Parts list for ordering these switches.

Cam Switches

In most cases, the factory lubrication of these switches should be adequate for the life of the instrument. The switch contacts are designated to operate dry for the life of the switch.

If the switch has been disassembled for replacement of switch sub-parts, a lubrication kit containing the necessary lubricating materials and instructions is available through any Tektronix Field Office. Order Tektronix Part 003-0342-01. General Electric Versilube ® silicone grease may be applied sparingly so that the lubricant does not get on the contacts. Refer to Figure 4-1 for lubrication instructions.

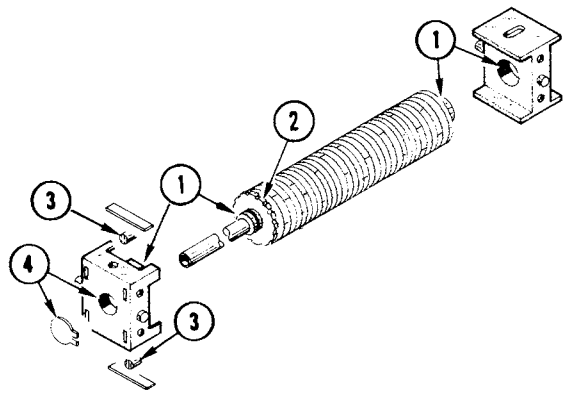

1. Apply lubricant to the drum journals and mating surface in the mounting bearings.

2. Apply lubricant to the wear surface of the index wheel.

3. Apply lubricant to the index roller and roller guide in the front bearing. A thin film should be applied to the inner face of the detent springs if more than one spring is replaced.

4. Ensure that some lubricant is present at the interface between the bearing and retainer clip.

(1481-40) 2206-11

Figure 4-1. Lubrication procedure for a typical cam switch.

SEMICONDUCTOR CHECKS

Periodic checks of semiconductors in the instrument are not recommended. The best check of semiconductor performance is actual operation in the instrument. More details on checking semiconductor operation are given under troubleshooting.

TROUBLESHOOTING

The following information is provided to help troubleshoot the instrument. Information contained in other sections of the manual should be used along with the following information to aid in locating the defective component. An understanding of the circuit operation is very helpful in locating troubles, particularly where integrated circuits are used.

TROUBLESHOOTING EQUIPMENT

The following equipment, in addition to that listed in the Performance Check and Adjustment section, is useful for troubleshooting the 7D01 Logic Analyzer unit.

Transistor Tester

Description. Dynamic-type tester.

Purpose: Test semiconductors.

Recommended Tektronix types: 576 Curve Tracer, 577/177 Curve Tracer system, 7CT1N Curve Tracer unit and a 7000-series oscilloscope system, or a 5CT1N Curve Tracer unit and a 5000-series oscilloscope.

Multimeter

Description: Voltmeter, 10 megohm input impedance and a range from 0 to at least 50 volts dc; accuracy, within 0.1%. Ohmmeter, 0 to 20 megohms. Test probes should be insulated to prevent accidental shorting.

Purpose: Check voltage and resistance.

Test Oscilloscope

Description: Frequency response, dc to 100 megahertz minimum; vertical deflection factor, 5 millivolts to 5 volts/-division. A 10X, 10 megohm voltage probe should be used to reduce circuit loading.

Purpose: Check operating waveforms.

Plug-In Extender

Description: Two types of extenders are available.

1. Flexible Plug-In Extender. Tektronix Part 067-0616-00 (two required).
2. Rigid Plug-In Extender. Tektronix Part 067-0589-00 (two required).

Purpose: Allows plug-in operation outside the mainframe.

TROUBLESHOOTING TECHNIQUES

Troubleshooting Procedure

This troubleshooting procedure is arranged to check the simple trouble possibilities before proceeding with extensive troubleshooting. The first few checks ensure proper connection, operation, and adjustment. If the trouble is not located by these checks, the remaining steps aid in locating the defective component. When the defective component is located, it should be replaced using the replacement procedure given under Corrective Maintenance.

1. CHECK CONTROL SETTINGS. Incorrect control settings can indicate a trouble that does not exist. If there is any question about the function or operation of any control, see the Operating Instructions section.

2. CHECK ASSOCIATED EQUIPMENT. Before proceeding with troubleshooting, check that the equipment used with this instrument is operating correctly. Check that the signal is properly connected and that inter-connecting cables are not defective. Also check the power source. If the trouble persists, this instrument is probably at fault.

3. VISUAL CHECK. Visually check the portion of the instrument in which the trouble is located. Many troubles can be located by visible indications such as unsoldered connections, broken wires, damaged circuit boards, damaged components, etc.

4. CHECK INSTRUMENT ADJUSTMENT. Check the adjustment of this instrument, or the affected circuit if the trouble appears in one circuit. The apparent trouble may only be a result of misadjustment. Complete adjustment instructions are given in the Performance Check and Adjustment section.

5. ISOLATE TROUBLE TO A CIRCUIT. To isolate trouble to a circuit, note the trouble symptom. The symptom often identifies the circuit in which the trouble is located. When trouble symptoms appear in more than one

circuit, check the affected circuits by taking voltage and waveform readings. Also check for the correct output signals at the front-panel connectors with a test oscilloscope. Incorrect operation of all circuits often indicates trouble in the power supply. Check for correct voltages of the individual supplies. A defective component elsewhere in the instrument can appear as a power-supply trouble and may also affect the operation of other circuits.

6. CHECK VOLTAGES AND WAVEFORMS. Often the defective component can be located by checking for the correct voltage or waveform in the circuit. Refer to check 9 (Check Power Supplies).

7. CHECK INDIVIDUAL COMPONENTS. The following procedures describe methods of checking individual components. Two-lead components that are soldered in place are best checked by first disconnecting one end. This isolates the measurement from the effects of surrounding circuitry.

CAUTION

To avoid component damage, disconnect the power source before removing or replacing semiconductors.

Transistors. A good check of transistor operation is actual performance under operating conditions. A transistor can be effectively checked by substituting a new component or one that has been checked previously. However, be sure that circuit conditions are not such that a replacement transistor might also be damaged. If substitute transistors are not available, use a dynamic tester. Static-type testers are not recommended, since they do not check operation under simulated operating conditions.

Integrated Circuits. IC's (integrated circuits) can be checked with a voltmeter, test oscilloscope, or by direct substitution. A good understanding of circuit operation is desirable when troubleshooting circuits using IC's. Use care when checking voltages and waveforms around the IC's so that adjacent leads are not shorted together. A convenient means of clipping a test probe to the 14- and 16-pin IC's is with an IC test clip. This device also serves as an extraction tool. The lead configuration for the semiconductors used in this instrument are shown on a pullout page in the front of the diagrams section. Pin 1 of the IC is indicated by a square pad on the back of the circuit board.

Diodes. A diode can be checked for an open or shorted condition by measuring the resistance between terminals with an ohmmeter scale having a low internal source current, such as the R X 1K scale. The resistance should be very high in one direction and very low when the meter leads are reversed.

CAUTION

Do not use the ohmmeter on a scale that has high internal current. High currents may damage the diode.

The cathode end of each glass-encased diode is indicated by a stripe, a series of stripes, or a dot. The cathode and anode ends of metal-encased diodes are identified by the diode symbol marked on the case.

Resistors. Check resistors with an ohmmeter. See the Replaceable Electrical Parts list for the tolerance of the resistors used in this instrument. Resistors normally do not need to be replaced unless the measured value varies widely from that specified.

Inductors. Check for open inductors by checking continuity with an ohmmeter. Shorted or partially shorted inductors can usually be found by checking the waveform response when high-frequency signals are passed through the circuit. Partial shorting often reduces high-frequency response (roll off).

Capacitors. A leaky or shorted capacitor can usually be detected by checking resistance with an ohmmeter on the highest scale. Do not exceed the voltage rating of the capacitor. The resistance reading should be high after initial charge of the capacitor. An open capacitor can best be detected with a capacitance meter or by checking if the capacitor passes ac signals.

8. REPAIR AND ADJUST. If any defective parts are located, follow the replacement procedures given in Corrective Maintenance. Be sure to check the performance of any circuit that has been repaired or had any electrical components replaced.

9. CHECK POWER SUPPLIES. If incorrect operation of the power supply is suspected, perform the following checks in the order listed.

CAUTION

To avoid equipment damage, disconnect the power source before performing the cable continuity check.

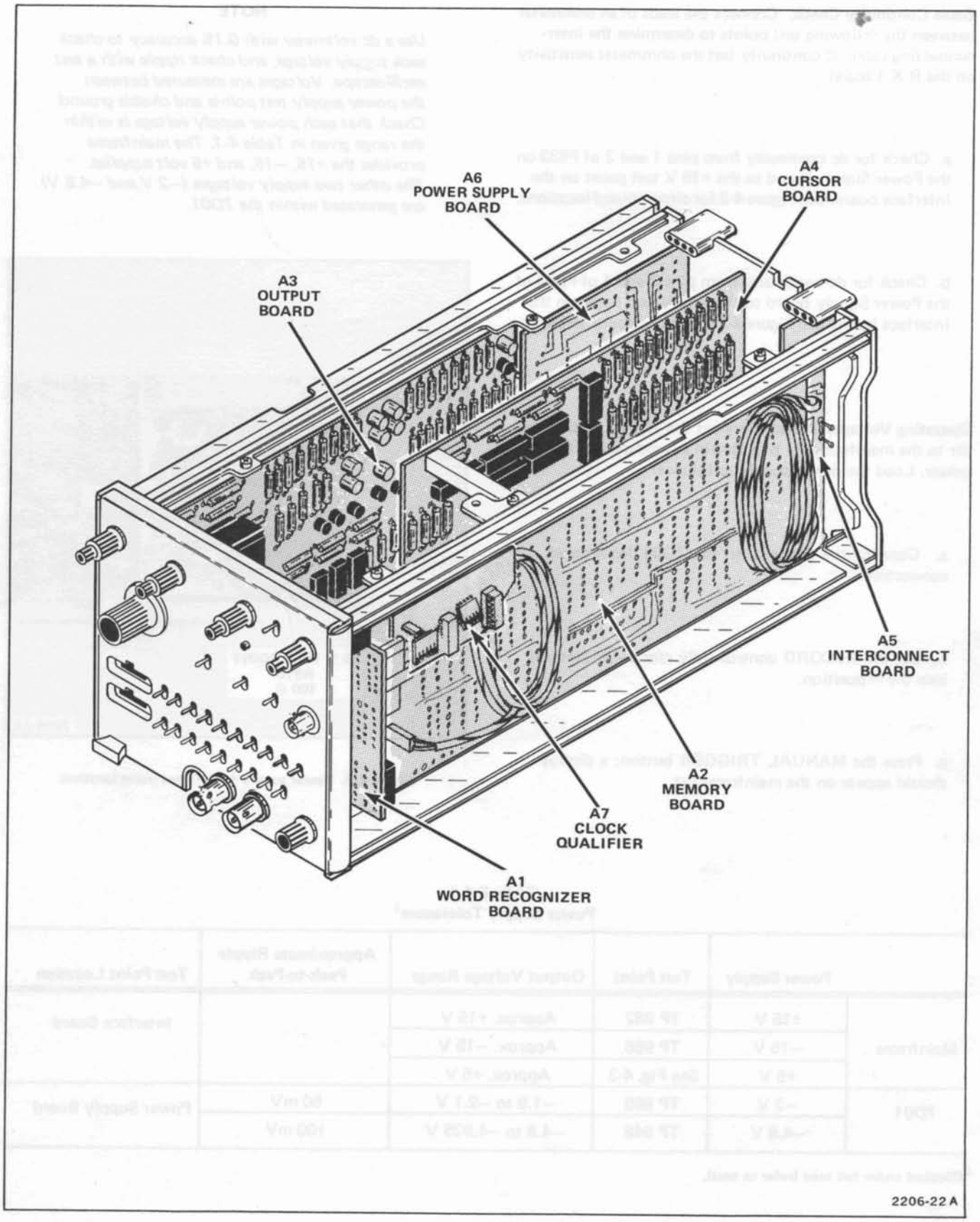

Figure 4-2. Circuit board locations.

Cable Continuity Check. Connect the leads of an ohmmeter between the following test points to determine the interconnecting cable dc continuity (set the ohmmeter sensitivity on the R X 1 scale).

a. Check for dc continuity from pins 1 and 2 of P933 on the Power Supply board to the +15 V test point on the Interface board. See Figure 4-2 for circuit board locations.

b. Check for dc continuity from pins 3 and 4 of P933 of the Power Supply board to the −15 V test point on the Interface board. See Figure 4-2 for circuit board locations.

Operating Voltages Check. Connect the 7D01 Logic Analyzer to the mainframe via two plug-in extenders, and apply power. Load the power supply as follows:

a. Connect the probe(s) to the 7D01 front-panel connectors.

b. Set the RECORD control fully clockwise (detent) into the ∞ position.

c. Press the MANUAL TRIGGER button; a display should appear on the mainframe crt.

NOTE

Use a dc voltmeter with 0.1% accuracy to check each supply voltage, and check ripple with a test oscilloscope. Voltages are measured between the power supply test points and chassis ground. Check that each power supply voltage is within the range given in Table 4-1. The mainframe provides the +15, −15, and +5 volt supplies. The other two supply voltages (−2 V and −4.8 V) are generated within the 7D01.

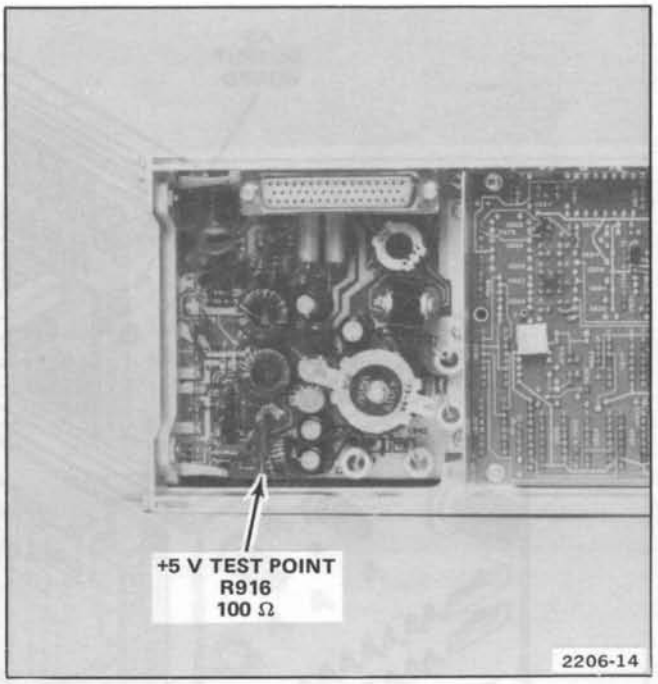

Figure 4-3. Power supply +5 volt test point location.

TABLE 4-1
Power Supply Tolerances[1]

	Power Supply	Test Point	Output Voltage Range	Approximate Ripple Peak-to-Peak	Test Point Location
Mainframe	+15 V	TP 982	Approx. +15 V		Interface Board
	−15 V	TP 986	Approx. −15 V		
	+5 V	See Fig. 4-3	Approx. +5 V		
7D01	−2 V	TP 968	−1.9 to −2.1 V	50 mV	Power Supply Board
	−4.8 V	TP 948	−4.8 to −4.925 V	100 mV	

[1] **Checked under full load (refer to text).**

CORRECTIVE MAINTENANCE

Corrective maintenance consists of component replacement and instrument repair. Special techniques required to replace components in this instrument are given here.

OBTAINING REPLACEMENT PARTS

All electrical and mechanical part replacements can be obtained through your Tektronix Field Office or representative. However, many of the standard electronic components can be obtained locally in less time than is required to order them from Tektronix, Inc. Before purchasing or ordering replacement parts, check the parts list for value, tolerance, rating, and description.

NOTE

When selecting replacement parts, it is important to remember that the physical size and shape of a component may affect its performance in the instrument, particularly at high frequencies. All parts should be direct replacements unless it is known that a different component will not adversely affect instrument performance.

Some parts are manufactured or selected by Tektronix, Inc. to satisfy particular requirements, or are manufactured for Tektronix, Inc. to our specifications. Most of the mechanical parts used in this instrument have been manufactured by Tektronix, Inc. To determine the manufacturer of parts, refer to parts list, Cross Index Mfg. Code Number to Manufacturer.

When ordering replacement parts from Tektronix, Inc., include the following information:

1. Instrument type.
2. Instrument serial number.
3. A description of the part (if electrical, include circuit number).
4. Tektronix part number.

WARNING

To avoid electrical shock, disconnect the instrument from the power source before soldering.

SOLDERING TECHNIQUES

The reliability and accuracy of this instrument can be maintained only if proper soldering techniques are used when repairing or replacing parts. General soldering techniques, which apply to maintenance of any precision electronic equipment, should be used when working on this instrument. Use only 60/40 rosin-core, electronic-grade solder. The choice of soldering iron is determined by the repair to be made. When soldering on circuit boards, use a 15- to 25-watt pencil-type soldering iron with a 1/8-inch wide, wedge-shaped tip. Keep the tip properly tinned for best heat transfer to the solder joint. A higher wattage soldering iron may separate the wiring from the base material. Avoid excessive heat; apply only enough heat to remove the component or to make a good solder joint. Also, apply only enough solder to make a firm solder joint; do not apply too much solder.

CAUTION

The Word Recognizer, Memory, Output, and Cursor circuit boards in this instrument are multilayer type boards with a conductive path(s) laminated between the top and bottom board layers. All soldering on these boards should be done with extreme care to prevent breaking the connections to the center conductor(s); only experienced maintenance personnel should attempt repair of these boards.

For metal terminals, (e.g., coaxial connector ground lug, etc.) a higher wattage-rating soldering iron may be required. Match the soldering iron to the work being done. For example, if the component is connected to the chassis or other large heat-radiating surface, it will require a 40-watt or larger soldering iron.

The following technique should be used to replace a component on a circuit board:

1. Grip the component lead with long-nose pliers. Touch the soldering iron to the lead at the solder connection. Do not lay the iron directly on the board, as it may damage the board.

2. When the solder begins to melt, gently pull the lead out. If unable to pull the lead without using force, try removing the other end of the component as it may be more easily removed.

NOTE

The reason that some component leads seem troublesome to remove is due to a bend placed on each lead during the manufacturing process. The purpose of the bent leads is to hold the component in place during a flow soldering manufacturing process that solders all components at one time.

If a component lead is extremely difficult to remove, it may be helpful to straighten the leads on the back side of the board with a small screwdriver or pliers while heating the soldered connection.

Desolder the component from the circuit board using heat on the component lead so that the solder will stay behind on the board. If it is desired to remove solder from a circuit board hole for easier installation of a new component, a solder-removing wick should be used for this purpose.

3. Bend the leads of the new component to fit the holes in the board. If the component is replaced while the board is mounted in the instrument, cut the leads so they will just protrude through the board. Insert the leads into the holes in the board so the component is firmly seated against the board (or as positioned originally). If it does not seat properly, heat the solder and gently press the component into place.

4. Touch the iron to the connection and apply a small amount of solder to make a firm solder joint. To protect heat-sensitive components, hold the lead between the component body and the solder joint with a pair of long-nose pliers or other heat sink.

5. Clip the excess lead that protrudes through the board (if not clipped in step 3).

6. Clean the area around the solder connection with a flux-remover solvent. Be careful not to remove information printed on the board.

COMPONENT REMOVAL AND REPLACEMENT

WARNING

To avoid electrical shock, disconnect the instrument from the power source before replacing components.

The exploded-view drawing associated with the Replaceable Mechanical Parts list may be helpful in the removal or disassembly of individual components or subassemblies. Component locations and circuit board locations are shown in the Diagrams and Circuit Board Illustrations section.

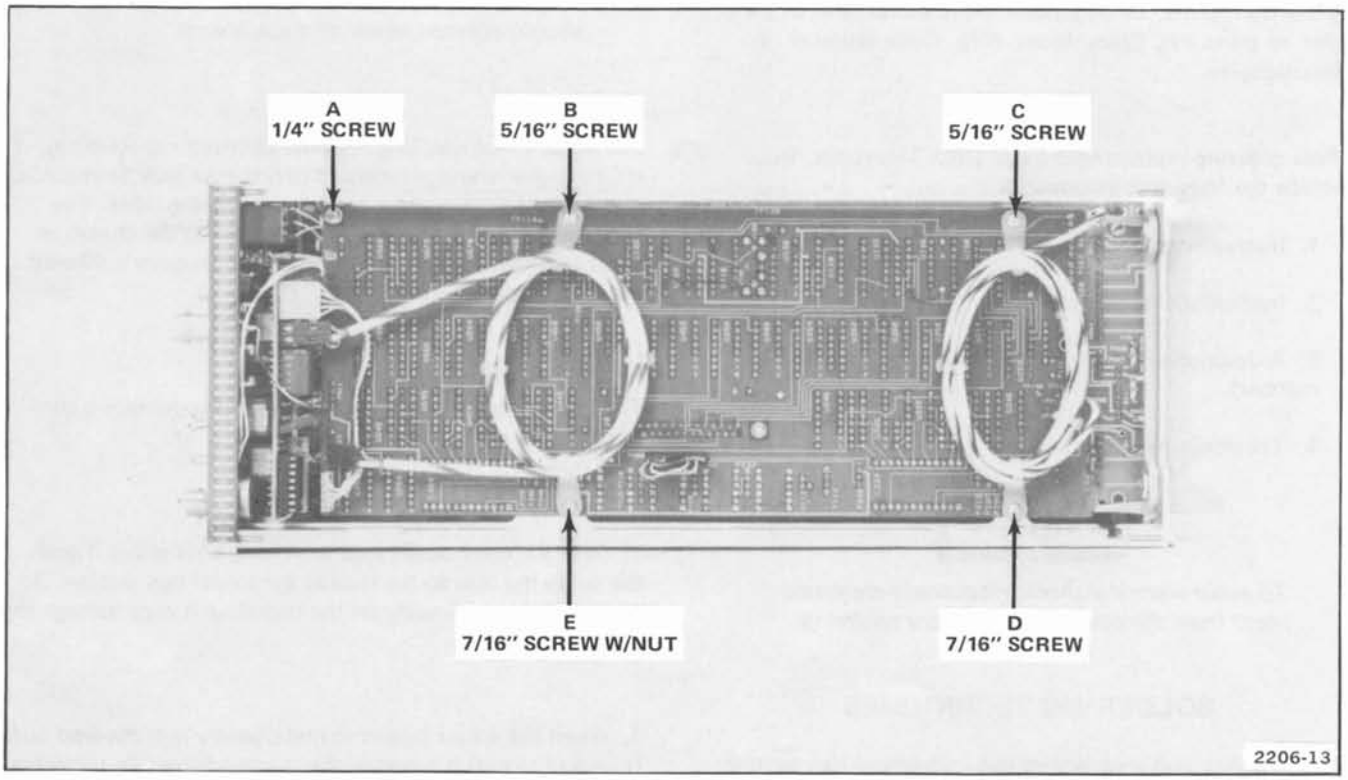

Figure 4-4. Locations of securing screws on the Memory circuit board.

Circuit Boards

If a circuit board is damaged beyond repair, replace the entire board assembly. Part numbers are given in the Replaceable Electrical Parts list for completely wired boards.

A7 CLOCK QUALIFIER CIRCUIT BOARD (SN B8086085 and up). To remove the circuit board:

1. Disconnect the 5-wire and 6-wire multi-pin connectors from the cirucit board.

2. Remove 2 screws from frame rail (located on top of the rail).

3. Remove the board by pulling away from the instrument.

4. Reverse order of removal to replace circuit board.

A2 MEMORY CIRCUIT BOARD. To remove the circuit board:

1. Remove the CLOCK QUALIFIER (SN B086085 and up) circuit board as previously outlined.

2. If the MEMORY circuit board is to be replaced, note color and position of the 5 wires soldered to the board from P1502 on the CLOCK QUALIFIER circuit board. Remove the 5 wires and solder onto the new MEMORY circuit board.

3. Note colors of all multi-pin connectors and P number to which each connects. Note wire color on single-conductor shielded cables and connector to which each is connected.

4. Disconnect all cables that terminate on Memory circuit board.

5. Remove 5 screws (A, B, C, D and E on Fig. 4-4) from Memory circuit board. Two delay lines will now come loose from Memory board.

6. Remove board by pulling away from, and toward rear of instrument.

7. Reverse order or removal to complete circuit board replacement. Refer to Figure 4-5 for multi-pin connector and P number orientation.

A5 INTERCONNECT CIRCUIT BOARD. To remove the circuit board:

1. Note color of all multi-pin connectors and P number to which each connects.

2. Disconnect all cable connectors that terminate on Interconnect circuit board.

3. Remove 4 screws (B, C, D, and E on Fig. 4-4) from Memory circuit board.

4. Disconnect P530 from Memory circuit board.

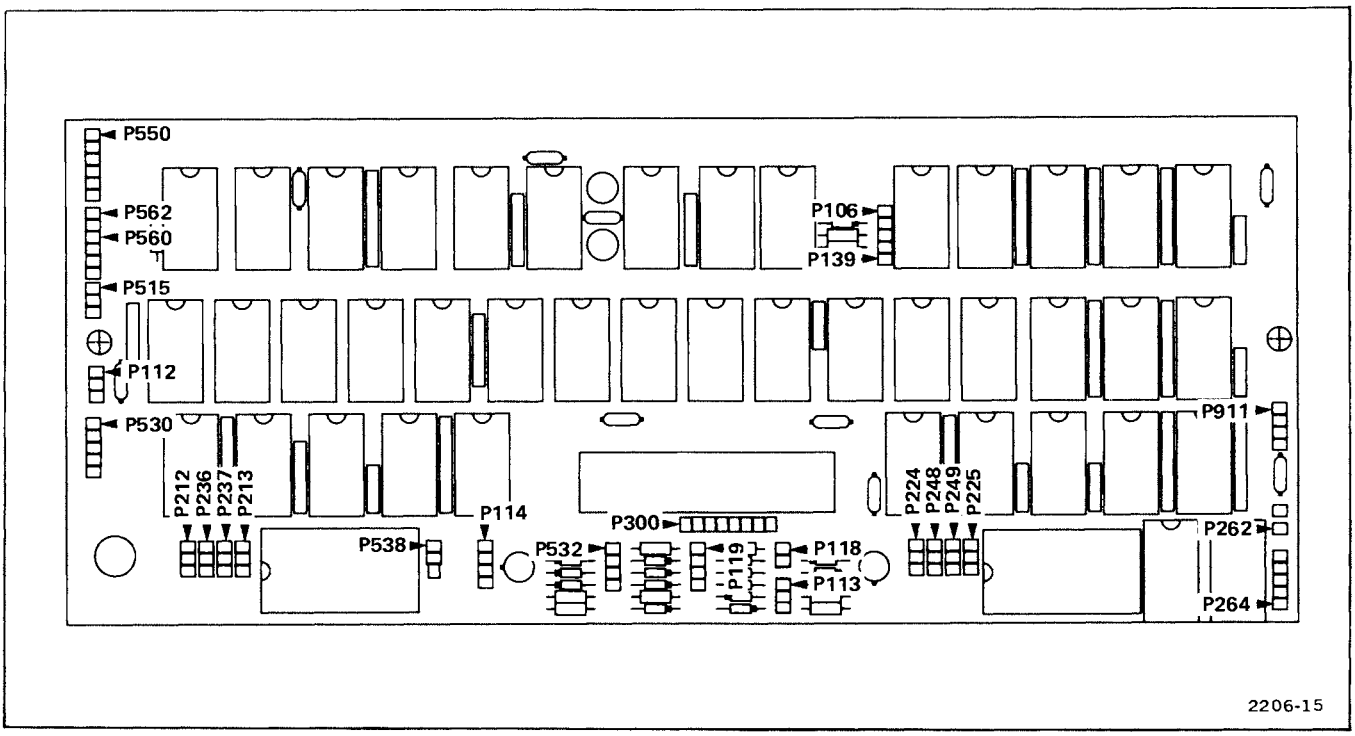

Figure 4-5. Multi-pin connector and P number orientation for the Memory circuit board.

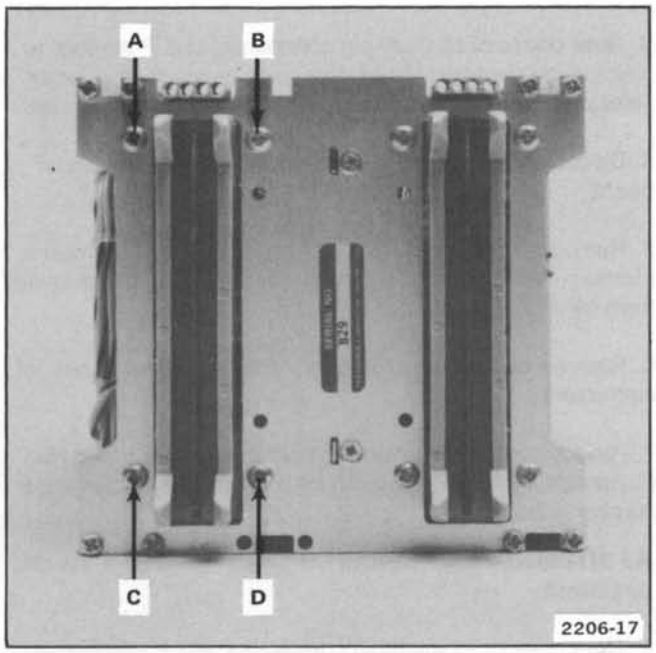

Figure 4-6. Locations of securing screws on the Interface circuit board.

5. Remove 4 screws (A, B, C, and D on Fig. 4-6) securing Interface circuit board and plug-in connector from rear panel.

6. Move Memory circuit board away from frame to allow clearance for Interconnect circuit board removal. Carefully remove Interconnect circuit board from bottom of instrument.

7. Note color and position of the 4 wires soldered to Interconnect circuit board.

8. Unsolder and remove the 4 wires.

9. Reverse order of removal to complete circuit board replacement.

A3 OUTPUT CIRCUIT BOARD. To remove the circuit board:

1. Remove knob from SAMPLE INTERVAL switch.

2. Note color of all multi-pin connectors and P number to which each connects. Note wire color on single-conductor shielded cables and connector to which each is connected.

3. Disconnect all cables that terminate on Output circuit board.

4. Remove 4 screws (A, B, C, and D on Fig. 4-7).

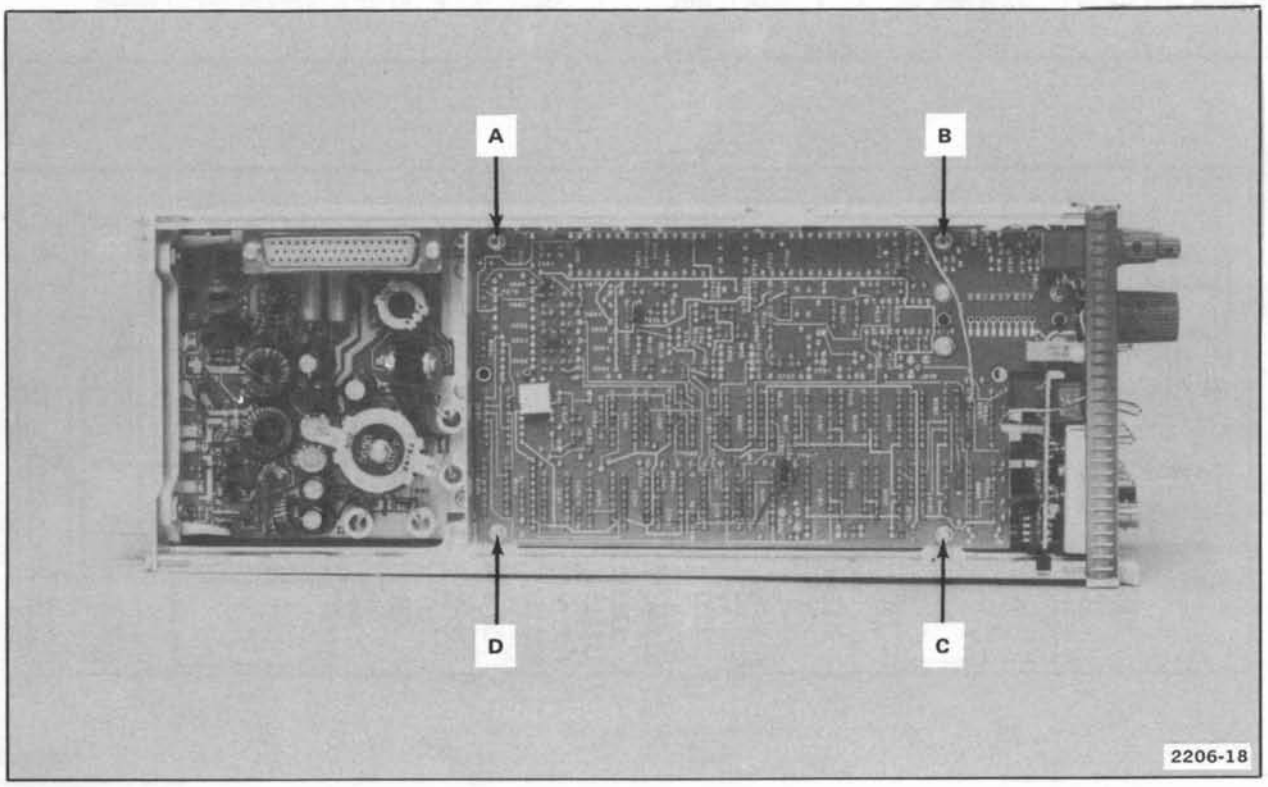

Figure 4-7. Locations of securing screws on the Output circuit board.

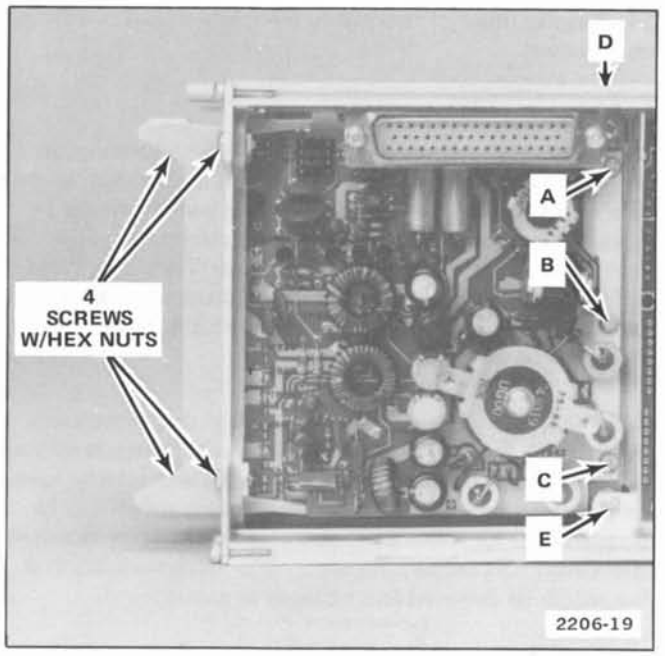

Figure 4-8. Locations of securing screws and shield on the Power Supply circuit board.

5. Lift rear of board away from side, and pull straight toward rear of instrument until SAMPLE INTERVAL switch shaft is clear of front panel.

6. Reverse order of removal to complete circuit board replacement.

A6 POWER SUPPLY CIRCUIT BOARD. To remove the circuit board:

1. Remove Output circuit board as previously outlined.

2. Remove 5 screws (A, B, C, D, and E on Fig. 4-8) in order listed.

3. Remove the 4 screws with hex head nuts which secure power supply plug-in connector to rear panel.

4. Note color of all multi-pin connectors and P number to which each connects.

5. Pull Power Supply circuit board (with plug-in connector attached) away from instrument far enough to disconnect all cables that terminate on board.

6. To replace Power Supply circuit board, reverse order of removal.

A4 CURSOR CIRCUIT BOARD. To remove the circuit board:

1. Note color of all multi-pin connectors and P number to which each connects.

2. Disconnect all cables that terminate on Cursor circuit board.

3. Remove 2 flat-head screws (A and B, Fig. 4-9) which secure Cursor circuit board to rear panel.

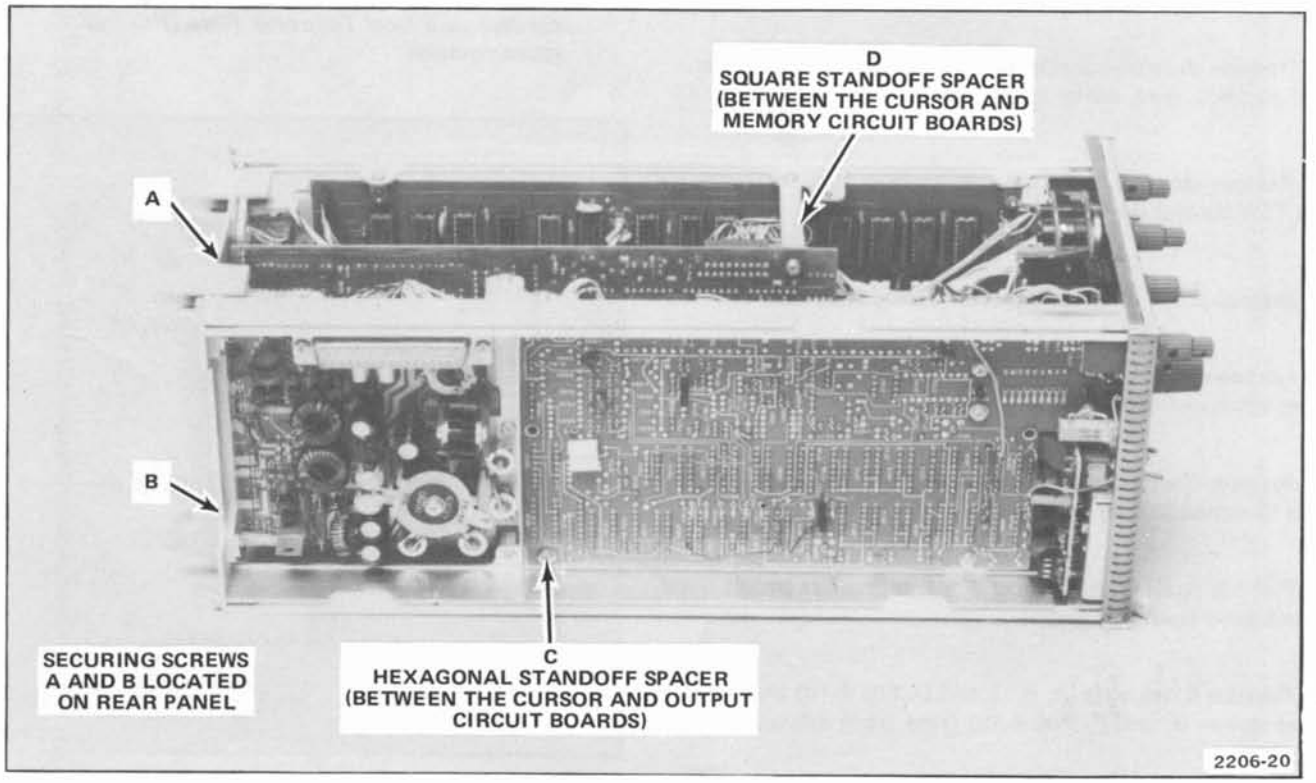

Figure 4-9. Locations of securing screws on the Cursor circuit board.

4. Remove 1 screw (C, Fig. 4-9) that secures Output board to hexagonal standoff spacer.

5. Remove 2 screws (D, Fig. 4-9) that secures Memory board and frame rail to square standoff spacer.

6. Push Cursor circuit board downward from instrument top far enough to remove screw and hexagonal standoff spacer from board.

7. Remove Cursor circuit board up through top of instrument.

8. To replace Cursor circuit board, reverse order of removal.

A1 WORD RECOGNIZER CIRCUIT BOARD. To remove the circuit board:

1. Note color of all multi-pin connectors and P number to which each connects.

2. Disconnect all cables that terminate on Word Recognizer circuit board. Wires that are soldered directly to controls can be traced and multi-pin connectors removed at opposite end.

3. Remove all front-panel knobs from control-switch shafts. Pull on small, gray, center knob to remove (no set screw).

4. Remove securing nuts with washers from RECORD and FILTER control shaft bushings.

5. Disengage the 7D01 release latch spring from frame rail.

6. Loosen and remove front panel by gently prying it away from sub panel with small screwdriver.

7. Remove 8 screws which secure front sub panel to frame rails (2 screws in each corner).

8. Pull sub panel with attached Word Recognizer circuit board away from instrument.

9. Remove 4 hex nuts (A, B, C, and D, Fig. 4-10) and 2 flat head screws (E and F, Fig. 4-10) from front sub panel.

10. Remove Word Recognizer circuit board by pulling it directly away from sub panel.

11. Reverse order of removal to complete circuit board replacement.

Switches

Several types of switches are used in this instrument. Contact alignment and spacing is critical to the operation of the cam switch. Therefore, a defective cam switch should be replaced as a unit or repaired only by personnel experienced with these types of switches. Your local Tektronix Field Office or representative can provide additional repair information. The following special maintenance information is provided for switch replacement.

CAM SWITCH. The cam switch used in this instrument consists of a rotating cam which mates with contacts on the adjacent circuit board. These contacts are activated by lobes on the cams as the switch is rotated. A cam switch can be disassembled for inspection, cleaning, repair, or replacement (see CAUTION below); however, it is recommended that the switch be removed and replaced as a unit.

CAUTION

Repair of a cam switch should be undertaken only by experienced maintenance personnel. Switch alignment and contact spacing must be carefully maintained for proper operation. A cam switch repair kit is available (Tektronix part 040-0541-00) which contains special alignment tools for use in repairing or replacing the switch contacts. For information or assistance on maintenance of cam switches, contact your local Tektronix Field Office or representative.

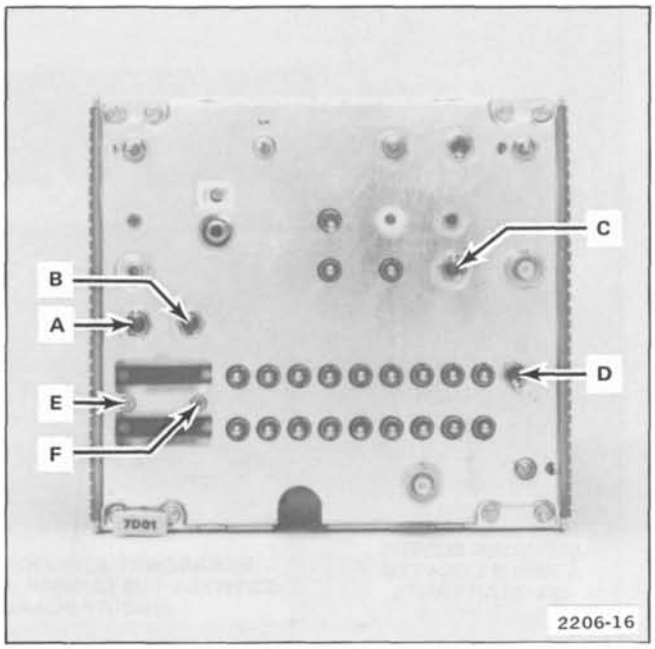

Figure 4-10. Locations of hex nuts and screws on front sub panel which secure the Word Recognizer circuit board.

Use the following procedure to remove and replace a cam switch:

1. Remove Output circuit board following instructions given previously.

2. Remove four screws that secure switch to circuit board.

3. Remove cam-switch assembly from board.

To replace the cam switch, reverse the order of removal.

TOGGLE SWITCHES. Most of the toggle switches in this instrument are soldered to the Word Recognizer circuit board. To replace a toggle switch, remove the Word Recognizer circuit board following instructions given previously. Refer to the Corrective Maintenance portion of this section for special instructions in soldering on multilayer type circuit boards.

Semiconductors

Semiconductors should not be replaced unless actually defective. If removed from their sockets during routine maintenance, return them to their original sockets. Unnecessary replacement of semiconductors may affect the adjustment of this instrument. When semiconductors are replaced, check the operation of the part of the instrument which may be affected.

CAUTION

To avoid component damage, power must be turned off before removing or replacing semiconductors.

Replacement devices should be of the original type or a direct replacement. The lead configurations of the semiconductor devices used in this instrument are shown in the Diagrams and Circuit Board Illustrations section. When replacing, check the manufacturer's basing diagram for correct basing. Semiconductors which have heat radiators use silicone grease to increase heat transfer. Replace the silicone grease when replacing these semiconductors.

WARNING

Handle silicone grease with care. Avoid getting silicone grease in eyes. Wash hands thoroughly after use.

An extracting tool should be used to remove the 14- and 16-pin integrated circuits to prevent damage to the pins. This tool is available from Tektronix, Inc. Order Tektronix Part 003-0619-00. If an extracting tool is not available when removing one of these integrated circuits, pull slowly and evenly on both ends of the device. Try to avoid having one end of the integrated circuit disengage from the socket before the other, as the pins may be damaged.

Interconnecting Pins

Two methods of interconnection are used to connect the circuit boards with other boards and components. When the interconnection is made with a coaxial cable, a special end-lead connector plugs into a socket on the board. When the interconnection is made with a wire lead, an end-lead connector is used which mates with an interconnecting pin soldered into the board. The following information provides the removal and replacement procedure for the various types of interconnecting methods:

COAXIAL-TYPE END-LEAD CONNECTORS. Replacement of the coaxial-type end-lead connectors requires special tools and techniques; only experienced maintenance personnel should attempt to remove and replace these connectors. It is recommended that the cable be replaced as a unit. For cable part numbers, see the Replaceable Mechanical Parts list. An alternative solution is to refer the replacement of the defective connector to your local Tektronix Field Office or representative.

END-LEAD PIN CONNECTORS. The pin connectors used to connect the wires to the interconnecting pins are clamped to the ends of the associated leads. To remove and replace damaged end-lead pin connectors, remove the old pin connector from the end of the lead and clamp the replacement connector to the lead.

Some of the pin connectors are grouped together and mounted in a plastic holder; the overall result is that these connectors are removed and installed as a multi-pin connector. The first end-lead pin (pin number 1) is soldered to a square pad to provide correct orientation of the multi-pin connector. Be sure the arrow on the multi-pin connector is aligned with this square pad when the connector is replaced. If the individual end-lead pin connectors are removed from the plastic holder, note the color of the individual wires for replacement.

CIRCUIT-BOARD PINS. A circuit-board pin replacement kit including the necessary tools, instructions, and replacement pins is available from Tektronix, Inc. Order Tektronix Part 040-0542-00. Replacement of circuit-board pins on multi-layer boards is not recommended; refer such repairs to your local Tektronix Field Office or representative.

CAUTION

Only experienced service personnel should replace circuit-board pins on multi-layer boards. Therefore, refer repairs of the Word Recognizer, Memory, Output, and Cursor circuit boards to your local Tektronix Field Office or representative.

To replace a damaged pin which is mounted on a single-layer circuit board, first disconnect any pin connectors. Then (using Soldering Techniques given earlier in this section), unsolder the damaged pin and pull it from the board with a pair of pliers, leaving the ferrule in the hole, if possible (see Fig. 4-11). If the ferrule remains in the circuit board, remove the spare ferrule from the replacement pin and press the new pin into the hole in the circuit board. If the ferrule is removed with the damaged pin, clean out the hole using a solder-removing wick and a scribe. Then press the replacement pin with attached spare ferrule into the hole. Position the replacement pin in the same manner as the old pin. Solder the pin to the circuit board on each side of the board. If the old pin was bent at an angle to mate with a connector, carefully bend the new pin to the same angle. Replace the pin connector.

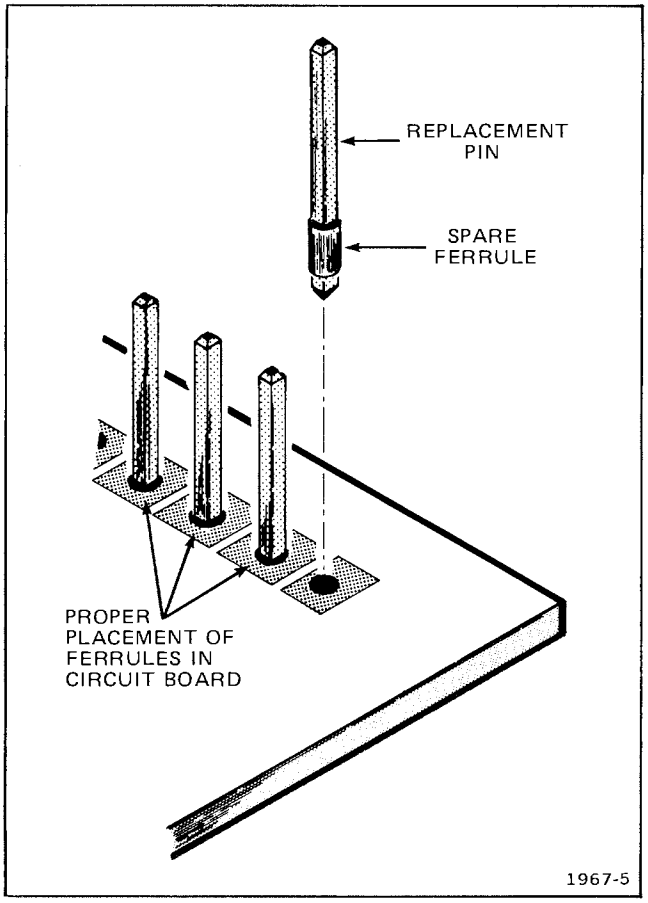

Figure 4-11. Exploded view of circuit-board pin and ferrule.

Sample Interval Indicator Incandescent Bulb and TRIG'D LED

Lights are mounted on the sub-panel using a plastic sleeve. Unsolder the lead wires and pull the bulb out of the sleeve from the rear of the sub-panel.

ADJUSTMENT AFTER REPAIR

After any electrical component has been replaced, the adjustment of that particular circuit should be checked, as well as other closely related circuits. See Section 5 for a complete adjustment procedure.

PERFORMANCE CHECK AND ADJUSTMENT

PRELIMINARY INFORMATION

Adjustment Interval

To maintain instrument accuracy, check the performance of the 7D01 every 1000 hours of operation, or every six months if used infrequently. Before complete adjustment, thoroughly clean and inspect this instrument as outlined in section 4, Maintenance.

Tektronix Field Service

Tektronix Field Service Centers and the Factory Service Center provide instrument repair and adjustment services. Contact your Tektronix Field Office or representative for further information.

Using This Procedure

This Performance Check and Adjustment procedure can be used either for complete adjustment or as a check of instrument performance. Completion of each step in the procedure ensures that the instrument is correctly adjusted and operating within specified limits.

Instrument performance only can be checked by omitting the last step (adjustment step) in the procedure. A check mark (√) preceding a CHECK indicates that the limit given is a performance requirement as listed under Specification in section 1, General Information.

TEST EQUIPMENT REQUIRED

The test equipment listed in Table 5-1 is required for a complete performance check and adjustment of this instrument. Detailed operating instructions for test equipment are omitted in this procedure. Refer to the test equipment instruction manual if more information is needed.

Special fixtures are used only where they facilitate instrument adjustment. These fixtures are available from Tektronix, Inc. Order by part number from Tektronix Field Offices or representatives.

The test equipment listed in the Examples of Applicable Test Equipment column, Table 5-1, is required to check and adjust this instrument. The Performance Check and Adjustment procedure is based on the first item of equipment given as an example. If other equipment is substituted, control settings or setups may need to be altered. If the exact item of equipment given as an example is not available, refer to the Minimum Specifications column to determine if other equipment may be substituted, then check the Purpose column. If you determine that your measurement requirements will not be affected, the item and corresponding step(s) can be deleted.

TABLE 5-1
Test Equipment

Description	Minimum Specifications	Purpose	Examples of Applicable Test Equipment
1. Test oscilloscope system	Tektronix 7000-series, 4-compartment mainframe with crt readout. Bandwidth, at least 200 MHz; fastest calibrated sweep rate, to at least 2 ns/div.	Set input pulse width and provide display for 7D01.	a. TEKTRONIX 7704A Oscilloscope System with 7A19 Amplifier unit and 7B80 Time Base unit.
2. DC voltmeter	Range, ±2 V to ±15 V; accuracy, within 1%.	Check threshold voltage.	a. TEKTRONIX DM 502 Digital Multi-Meter.[1] b. TEKTRONIX 7D13 Digital Multi-Meter.[2]
3. Pulse generator	Pulse duration, 10 ns to 300 ns; pulse period, 20 ns to 1 μs; output amplitude, 0 V dc to 3 V dc; rise time, 2 ns or less.	Check Minimum Data and External Clock Pulse Widths.	a. TEKTRONIX PG 502 250 MHz Pulse Generator.[1]

[1] Used with TM 500-series power module.
[2] Used in 7000-series oscilloscope mainframe.

TABLE 5-1 (CONT.)
Test Equipment

Description	Minimum Specifications	Purpose	Examples of Applicable Test Equipment
4. Plug-in extender[3] (2 required)	Fits Tektronix 7000-series plug-in units.	Provides access to internal adjustments.	a. Tektronix part 067-0616-00 Calibration Fixture.
5. 50-ohm BNC cable		Connects pulse generator to test oscilloscope amplifier unit for measuring pulse width.	a. Tektronix part 012-0076-00.
6. BNC "T" adapter	BNC male to 2 BNC female connectors.	Connects cable to amplifier unit and probe.	a. Tektronix part 103-0030-00.
7. BNC-to-binding post adapter	Connectors: BNC male to dual binding post.	Connects probe leads to Pulse Generator signal.	a. Tektronix part 103-0035-00.
8. Screwdriver	3-inch shaft, 3/32-inch bit.	Adjust Variable Threshold and internal adjustments.	a. Xcelite R-3323.

[3]Used for calibration only; NOT used for performance check.

PRELIMINARY PROCEDURE (SN B086085 - UP)

NOTE

The performance of this instrument can be checked at any ambient temperature from 0° to 40°C unless otherwise stated. Adjustments must be performed at an ambient temperature between +20° and 30° for specified accuracy.

1. Before installing the 7D01 in the test oscilloscope system, check the Cursor Byte selection jumper, P1493. It should be in the 4-bit position (see Fig. 2-3).l

2. Install the 7D01 in center two plug-in compartments, right vertical and A horizontal, of test oscilloscope system.

3. Press the appropriate Mode switches for the compartments used by the 7D01.

4. Connect a P6451 Data Acquisition Probe to top Data-Input Connector (Channels 0-7 and External Clock).

5. Set the 7D01 front-panel controls as follows:

VERT
POS . . . . . Midrange
MAG X1

RECORD
DISPLAY
TIME . . . . . ∞ (fully clockwise detent)

CLOCK
QUALIFIER . . . . . Off

HORIZ
POS . . . . . Midrange
MAG X1

(CURSOR) THRESHOLD
VOLTAGE . . . . . TTL

EXT CLOCK
POLARITY . . . . . ⌐

SAMPLE
INTERVAL . . . . . 1 μs

DATA
CHANNELS 0-3

DATA POSITION . . CENTER

TRIG SOURCE . . . CH 0

EXT TRIG
POLARITY . . . . . ⌐

WORD
RECOGNIZER
W.R. MODE . . . ASYNC
FILTER . . . . . MIN
CH 0-15 . . . . . X (center)
EXTERNAL
QUALIFIER . . . . . X (center)
PROBE
QUALIFIER . . . . . X (center)

6. Apply power to test equipment and allow at least 30 minutes warm-up time before continuing this procedure.

7. This completes the preliminary procedure.

SEE PAGE 2-4

P835 EXT. - INT CLOCK JUMPER

PRELIMINARY PROCEDURE (SN B086084 - below)

NOTE

The performance of this instrument can be checked at any ambient temperature from 0° to +40° C unless otherwise stated. Adjustments must be performed at an ambient temperature between +20° and +30° C for specified accuracy.

1. Install 7D01 in center two plug-in compartments (right vertical and A horizontal) of test oscilloscope system.

2. Connect a P6451 Data Acquisition Probe to top Data-Input Connector (Channels 0-7 and External Clock).

3. Set 7D01 front-panel controls as follows:

VERT
- POS . . . . . .Midrange
- MAG X1

RECORD
- DISPLAY
- TIME . . . . . .∞ (fully clockwise detent)

CURSOR
- BYTE. . . . . .4 BIT

HORIZ
- POS . . . . . .Midrange
- MAG X1

THRESHOLD VOLTAGE. . . . . .TTL

EXT CLOCK POLARITY . . . . . .⎍

SAMPLE INTERVAL . . . . . .1 μs

DATA CHANNELS. 0-3

DATA POSITION. . . . . .CENTER

TRIG SOURCE. . . .CH 0

EXT TRIG POLARITY . . . . . .⎍

WORD RECOGNIZER
- W.R. MODE. . . .ASYNC
- FILTER . . . . . .MIN
- CH 0 through 15 . . . . . .X (center)
- EXTERNAL QUALIFIER . . .X (center)
- PROBE QUALIFIER . . .X (center)

4. Install amplifier unit and time-base unit in left vertical and B horizontal compartments, respectively.

5. Connect 50-ohm BNC cable from amplifier unit input connector to BNC "T" adapter.

6. Connect BNC "T" adapter to pulse generator output and to BNC-to-dual binding post adapter.

7. Apply power to test equipment and allow at least 15 minutes warm-up time before continuing this procedure.

Power Supplies (AS)

Z (NO PROBES)

(Simpson 260 (Fluke 8020A))

VOLTAGE	LO	HI	120
+5 V	25 Ω	8	3.88K 3.88K
		50	741 866

EXTERNAL Supply ADDED CURRENT DRAWN

+15V ≅ 100MA

−2 Volts ≅ 1.75 Amps

−4.8 Volts ≅ 4.4 Amps

−15 V ≅ 100 mA

5 V ≅ 1 AMP

PERFORMANCE CHECK AND ADJUSTMENT PROCEDURE

√ **1. CHECK DISPLAY (SN B086085 - Up)**

a. Press RECORD MANUAL RESET and MANUAL TRIGGER push-button switches (in that order) to obtain display.

b. Adjust test oscilloscope intensity and focus controls as desired.

√ c. CHECK—That displayed traces are between 7.5 and 10 divisions long with HORIZ MAG control in X1 position.

d. Change HORIZ MAG control to X10 position (fully clockwise).

√ e. CHECK—That ends of displayed traces can be positioned on screen with HORIZ POS control.

f. Change HORIZ MAG control back to X1 position.

√ g. CHECK—That horizontal position of displayed traces does not move more than one division when the DATA CHANNELS switch is changed to 0-15 position.

√ h. CHECK—With DATA CHANNELS switch in 0-15 position, that display contains 16 traces divided into four groups of four traces each.

i. Change VERT MAG control to X5 position (fully clockwise).

√ j. CHECK—That any of the 16 displayed traces can be positioned on screen with the VERT POS control.

k. Change VERT MAG control back to X1 position (fully counterclockwise).

√ l. CHECK—That Cursor intensified zone can be positioned to any bit of the displayed traces with the CURSOR COARSE and FINE POS controls in 16-bit increments (COARSE) and 1-bit increments (FINE POS) as displayed by the Cursor Position readout (top of crt).

√ m. CHECK—That Cursor Data readout (bottom of crt) displays sixteen 0's in four groups of four digits each.

n. Turn off the power for the test oscilloscope system and remove the 7D01.

o. Change the internal Cursor Byte selection jumper, P1493, to the 3-bit position (see Fig. 2-3).

p. Set DATA CHANNELS to 0-3.

q. Install the 7D01 in the center two compartments of the test oscilloscope system and apply power.

r. Repeat part a.

s. Change DATA CHANNELS to 0-15.

√ t. CHECK—That the Cursor Data readout displays 16 zeros in four groups of three bits each and one group of four bits.

u. Repeat part n.

v. Change the internal Cursor Byte selection jumper, P1493, to the 4-bit position (see Fig. 2-3).

w. Change DATA CHANNELS to 0-3 position.

x. repeat part q.

y. CHECK—That the Trigger intensified zone is approximately centered on the displayed traces.

z. Change the DATA POSITION switch to POST TRIG.

√ aa. CHECK—That the Trigger intensified zone moves toward the left end of the displayed traces.

ab. Change the DATA POSITION switch to PRE TRIG.

√ ac. CHECK—That the Trigger intensified zone moves toward the right end of the displayed traces.

ad. Change the DATA POSITION switch back to CENTER.

√ **1A. CHECK DISPLAY (SN B086084 - below)**

NOTE
(SN B086085 - Below)

To set pulse generator output, set test oscilloscope vertical and horizontal mode to display amplifier unit and time-base unit. Set pulse generator as specified and switch test oscilloscope back to display 7D01.

√ **Performance Requirement check; see introductory information.**

a. Press RECORD MANUAL RESET and MANUAL TRIGGER push-button switches (in that order) to obtain display.

b. Adjust test oscilloscope intensity and focus controls as desired.

√ c. CHECK—That displayed traces are between 7.5 and 10 divisions long with HORIZ MAG control in X1 position.

d. Change HORIZ MAG control to X10 position (fully clockwise).

√ e. CHECK—That ends of displayed traces can be positioned on screen with HORIZ POS control.

f. Change HORIZ MAG control back to X1 position.

√ g. CHECK—That horizontal position of displayed traces does not move more than one division when the DATA CHANNELS switch is changed to 0-15 position.

√ h. CHECK—With DATA CHANNELS switch in 0-15 position, that display contains 16 traces divided into four groups of four traces each.

i. Change VERT MAG control to X5 position (fully clockwise).

√ j. CHECK—That any of the 16 displayed traces can be positioned on screen with the VERT POS control.

k. Change VERT MAG control back to X1 position (fully counterclockwise).

√ l. CHECK—That Cursor intensified zone can be positioned to any bit of the displayed traces with the CURSOR COARSE and FINE POS controls in 16-bit increments (COARSE) and 1-bit increments (FINE POS) as displayed by the Cursor Position readout (top of crt).

√ m. CHECK—That Cursor Data readout (bottom of crt) displays sixteen 0's in four groups of four digits each.

n. Change CURSOR BYTE switch to 3 BIT position.

√ o. CHECK—That Cursor Data readout displays sixteen 0's in five groups (one 4-bit group and four 3-bit groups).

p. Change CURSOR BYTE switch back to 4 BIT position.

q. Change DATA CHANNELS switch back to 0-3 position.

√ r. CHECK—That Trigger intensified zone is approximately centered on the displayed traces.

s. Change DATA POSITION switch to POST TRIG.

√ t. CHECK—That Trigger intensified zone moves toward the left end of the displayed traces.

u. Change DATA POSITION switch to PRE TRIG.

√ v. CHECK—That Trigger intensified zone moves toward the right end of the displayed traces.

w. Change DATA POSITION switch back to CENTER.

√ 2. CHECK THRESHOLD VOLTAGE

a. Connect dc voltmeter between THRESHOLD VOLTAGE MONITOR pin jack and chassis ground.

√ b. CHECK—That Threshold Voltage can be adjusted from −12 V or less to at least +12 V with VAR screwdriver adjustment.

c. Disconnect dc voltmeter from 7D01.

√ Performance Requirement check; see introductory information.

√ 3. CHECK MINIMUM EXTERNAL CLOCK PULSE WIDTH

a. Install the vertical amplifier and horizontal time-base plug-ins in the Left Vert and B Horiz compartments respectively.

b. Connect a 50ΩBNC cable from the vertical amplifier INPUT connector to a BNC "T" adapter.

c. Connect the BNC "T" adapter to the pulse generator OUTPUT connector.

d. Connect a BNC-to-dual binding post adapter to the other side of the BNC "T" adapter.

e. Set the pulse generator for output waveform as follows:

LO Level	0.0 V
HI Level	+2.0 V
HI Level Pulse Duration	10 ns
Pulse Period	1.0 μs
Back Term	Out
EXT CLOCK POLARITY	⎍

SEE NOTE L PAGE 5-3 AND put JUMPER INTO EXT. POS.

NOTE

To set the pulse generator output, set the test oscilloscope Vertical and Horizontal Mode switches to display the vertical and horizontal plug-ins. Set the pulse generator as specified, switch the test oscilloscope system to display the 7D01 signals.

f. Connect the C probe lead (External Clock) to pulse generator output, the CH 0 probe lead to the test oscilloscope 4 volt, 1khz output, and the GND probe lead to ground.

g. Change RECORD DISPLAY TIME control to 1s position (fully counterclockwise) and SAMPLE INTERVAL switch to EXT position.

h. Adjust 7D01 VERT and HORIZ controls as desired.

i. CHECK-For stable display of CH 0 signal with the rising edge of the CH 0 signal centered on the trace. (Adjust pulse amplitude if necessary.)

j. Change DATA CHANNELS switch to 0-7 and repeat parts e. and i.

k. Change DATA CHANNELS switch to 0-15 and repeat parts e. and i., except adjust the Pulse Duration for 20 ns.

l. Change EXT CLOCK POLARITY switch to ⎍ position and change DATA CHANNELS switch to 0-3.

m. Set the pulse generator for output waveform as follows:

COMP	IN
LO Level	0.0 V
HI Level	+2.0 V
LO Level Pulse Duration	10 ns
Pulse Period	1.0 us
Back Term	Out

n. Repeat parts i. through k., substitute part m. for part e.

o. Change EXT CLOCK POLARITY switch to ⎍ position.

√ 4. CHECK MINIMUM SAMPLE INTERVAL

a. Set pulse generator for output waveform as follows:

LO Level	0.0 V
HI Level	at least +2.0 V
HI Level Pulse Duration	.5 μs
Pulse Period	.10 μs
BACK TERM	In

b. Disconnect CH 0 probe lead from test oscilloscope calibrator and connect to pulse generator output.

c. Disconnect C probe lead from pulse generator output.

d. Change SAMPLE INTERVAL switch to 10 ns position.

e. Change DATA CHANNELS switch to 0-3 position.

√ f. CHECK—For stable display of CH 0 signal. (Adjust pulse amplitude if necessary.)

g. Change DATA CHANNELS switch to 0-7.

h. Change SAMPLE INTERVAL switch to 20 ns.

√ i. Repeat part f.

j. Change DATA CHANNELS switch to 0-15.

k. Change SAMPLE INTERVAL switch to 50 ns.

√ l. Repeat part f. (Disregard any noise on channels 8-15).

√Performance Requirement check; see introductory information.

√ **5. CHECK MINIMUM DATA PULSE WIDTH**

a. Set pulse generator for output waveform as follows:

LO Level . . . . . .0.0 V

HI Level . . . . . .at least +2.0 V

HI Level Pulse Duration . . . . . .15 ns

Pulse Period . . . . . .10 μs

BACK TERM . . . . . Out

b. Change SAMPLE INTERVAL switch to 10 ns.

c. Change DATA CHANNELS switch to 0-3.

√ d. CHECK—For at least one HI pulse stored on CH 0 display.

√ **6. CHECK MINIMUM TRIGGER PULSE WIDTH**

a. Change TRIGGER SOURCE switch to EXT position.

b. Disconnect 50-ohm cable from amplifier unit input and connect to 7D01 EXT TRIG/QUALIFIER INPUT.

√ c. CHECK—That TRIG'D light is on and remains on.

d. Disconnect 50-ohm cable from EXT TRIG/QUALIFIER INPUT and reconnect to amplifier unit input.

e. Change pulse generator pulse duration to 10 ns.

W.R. MODE TO ASYNC

f. Change TRIGGER SOURCE switch to W.R. and WORD RECOGNIZER CH 0 switch to HI.

√ g. CHECK—That TRIG'D light is on and remains on.

h. Connect all other data channel probe leads (Channels 1 through 7) to pulse generator output.

i. Change pulse generator pulse duration to 15 ns.

j. Change WORD RECOGNIZER CH 1, CH 2, and CH 3 switches to HI.

√ k. Repeat part g.

l. Change pulse generator pulse duration to 20 ns.

m. Change WORD RECOGNIZER CH 4 through CH 7 switches to HI.

√ n. Repeat part g.

o. Change WORD RECOGNIZER CH 0 through CH 7 switches to X.

p. Disconnect P6451 probe from top Data-Input Connector (Channels 0-7 and External Clock) and connect to bottom Data-Input Connector (Channels 8-15 and Probe Qualifier).

q. Change WORD RECOGNIZER CH 8 through CH 15 switches to HI.

√ r. Repeat part g.

√ **7. CHECK WORD RECOGNIZER FILTER**

a. Change pulse generator pulse duration to 300 ns.

b. Rotate WORD RECOGNIZER FILTER control to >300 ns (fully clockwise).

√ c. CHECK—That TRIG'D light is out and remains out.

E VIEW WR OUTPUT INTO 50Ω PULSE WIDTH VARIES WITH FILTER

√ **8. CHECK WORD RECOGNIZER OUTPUT SIGNAL**

a. Change WORD RECOGNIZER FILTER control to MIN (fully counterclockwise).

b. Disconnect 50-ohm cable from pulse generator output and connect to W.R. OUT connector.

√ c. CHECK—For output pulse of at least +0.95 V amplitude and a baseline-level from ground reference of +50 mV or less (into 50-ohm load).

√**Performance Requirement check; see introductory information.**

BEFORE YOU BEGIN, see TEST POINT AND ADJUSTMENT LOCATIONS in the Diagrams section.

9. DISPLAY ADJUSTMENTS

a. Turn off power to test oscilloscope and remove 7D01.

b. Install two plug-in extenders in center plug-in compartments of test oscilloscope.

c. Connect plug-in extenders to proper plug-in connectors on rear panel of 7D01.

d. Apply power to test oscilloscope.

e. Remove P6451 Data Acquisition Probe from the Data Input connector.

f. Rotate RECORD DISPLAY TIME control to fully clockwise detent position (∞).

g. Press the RECORD MANUAL RESET and MANUAL TRIGGER push buttons (in that order).

h. Adjust test oscilloscope intensity, focus, and readout controls for a well-defined crt display.

i. Identify the trigger intensified zone by switching the DATA POSITION to POST TRIG and back to CENTER position.

j. Adjust R625 for desired contrast of the trigger intensified zone (if necessary).

k. Identify the cursor intensified zone by rotating the CURSOR COARSE control.

l. Adjust R1375 for desired contrast of the cursor intensified zone (if necessary).

m. Rotate the CURSOR FINE POS control and check that the least significant digit of the Cursor Position readout (TRIG + XXXX) can be set to all digits between 0 and 9.

n. If the Cursor Position readout skips and/or repeats any number, remove the 7D01 and plug-in extenders from the test oscilloscope and connect to another Tektronix 7000-series oscilloscope (if available). Then repeat part m. (If the test oscilloscope is not the one normally used with the 7D01, the second check and following adjustment should be made in the oscilloscope mainframe in which the 7D01 is normally used.)

o. If the Cursor Position readout still skips and/or repeats numbers, carefully adjust R1335 and repeat part m.

This completes the Performance Check and Adjustment procedure for the 7D01.

REPLACEABLE ELECTRICAL PARTS

PARTS ORDERING INFORMATION

Replacement parts are available from or through your local Tektronix, Inc. Field Office or representative.

Changes to Tektronix instruments are sometimes made to accommodate improved components as they become available, and to give you the benefit of the latest circuit improvements developed in our engineering department. It is therefore important, when ordering parts, to include the following information in your order: Part number, instrument type or number, serial number, and modification number if applicable.

If a part you have ordered has been replaced with a new or improved part, your local Tektronix, Inc. Field Office or representative will contact you concerning any change in part number.

Change information, if any, is located at the rear of this manual.

SPECIAL NOTES AND SYMBOLS

X000	Part first added at this serial number
00X	Part removed after this serial number

ITEM NAME

In the Parts List, an Item Name is separated from the description by a colon (:). Because of space limitations, an Item Name may sometimes appear as incomplete. For further Item Name identification, the U.S. Federal Cataloging Handbook H6-1 can be utilized where possible.

ABBREVIATIONS

ACTR	ACTUATOR	PLSTC	PLASTIC
ASSY	ASSEMBLY	QTZ	QUARTZ
CAP	CAPACITOR	RECP	RECEPTACLE
CER	CERAMIC	RES	RESISTOR
CKT	CIRCUIT	RF	RADIO FREQUENCY
COMP	COMPOSITION	SEL	SELECTED
CONN	CONNECTOR	SEMICOND	SEMICONDUCTOR
ELCTLT	ELECTROLYTIC	SENS	SENSITIVE
ELEC	ELECTRICAL	VAR	VARIABLE
INCAND	INCANDESCENT	WW	WIREWOUND
LED	LIGHT EMITTING DIODE	XFMR	TRANSFORMER
NONWIR	NON WIREWOUND	XTAL	CRYSTAL

CROSS INDEX—MFR. CODE NUMBER TO MANUFACTURER

Mfr. Code	Manufacturer	Address	City, State, Zip
00853	SANGAMO ELECTRIC CO., S. CAROLINA DIV.	P O BOX 128	PICKENS, SC 29671
01121	ALLEN-BRADLEY COMPANY	1201 2ND STREET SOUTH	MILWAUKEE, WI 53204
01295	TEXAS INSTRUMENTS, INC., SEMICONDUCTOR GROUP	P O BOX 5012, 13500 N CENTRAL EXPRESSWAY	DALLAS, TX 75222
01961	PULSE ENGINEERING, INC.	7250 CONVOY COURT	SAN DIEGO, CA 92111
02111	SPECTROL ELECTRONICS CORPORATION	17070 EAST GALE AVENUE	CITY OF INDUSTRY, CA 91745
02735	RCA CORPORATION, SOLID STATE DIVISION	ROUTE 202	SOMERVILLE, NY 08876
03508	GENERAL ELECTRIC COMPANY, SEMI-CONDUCTOR PRODUCTS DEPARTMENT	ELECTRONICS PARK	SYRACUSE, NY 13201
04222	AVX CERAMICS, DIVISION OF AVX CORP.	P O BOX 867, 19TH AVE. SOUTH	MYRTLE BEACH, SC 29577
04713	MOTOROLA, INC., SEMICONDUCTOR PROD. DIV.	5005 E MCDOWELL RD,PO BOX 20923	PHOENIX, AZ 85036
07263	FAIRCHILD SEMICONDUCTOR, A DIV. OF FAIRCHILD CAMERA AND INSTRUMENT CORP.	464 ELLIS STREET	MOUNTAIN VIEW, CA 94042
08806	GENERAL ELECTRIC CO., MINIATURE LAMP PRODUCTS DEPARTMENT	NELA PARK	CLEVELAND, OH 44112
09353	C AND K COMPONENTS, INC.	103 MORSE STREET	WATERTOWN, MA 02172
12697	CLAROSTAT MFG. CO., INC.	LOWER WASHINGTON STREET	DOVER, NH 03820
14433	ITT SEMICONDUCTORS	3301 ELECTRONICS WAY P O BOX 3049	WEST PALM BEACH, FL 33402
14752	ELECTRO CUBE INC.	1710 S. DEL MAR AVE.	SAN GABRIEL, CA 91776
15238	ITT SEMICONDUCTORS, A DIVISION OF INTER NATIONAL TELEPHONE AND TELEGRAPH CORP.	P.O. BOX 168, 500 BROADWAY	LAWRENCE, MA 01841
24546	CORNING GLASS WORKS, ELECTRONIC COMPONENTS DIVISION	550 HIGH STREET	BRADFORD, PA 16701
27014	NATIONAL SEMICONDUCTOR CORP.	2900 SEMICONDUCTOR DR.	SANTA CLARA, CA 95051
32997	BOURNS, INC., TRIMPOT PRODUCTS DIV.	1200 COLUMBIA AVE.	RIVERSIDE, CA 92507
34335	ADVANCED MICRO DEVICES	901 THOMPSON PL.	SUNNYVALE, CA 94086
50157	MIDWEST COMPONENTS INC.	P. O. BOX 787 1981 PORT CITY BLVD.	MUSKEGON, MI 49443
50434	HEWLETT-PACKARD COMPANY	640 PAGE MILL ROAD	PALO ALTO, CA 94304
51642	CENTRE ENGINEERING INC.	2820 E COLLEGE AVENUE	STATE COLLEGE, PA 16801
53184	XCITON CORPORATION	5 HEMLOCK STREET	LATHAM, NY 12110
55680	NICHICON/AMERICA/CORP.	6435 N PROESEL AVENUE	CHICAGO, IL 60645
56289	SPRAGUE ELECTRIC CO.	87 MARSHALL ST.	NORTH ADAMS, MA 01247
59660	TUSONIX INC.	2155 N FORBES BLVD	TUCSON, AZ 85705
72982	ERIE TECHNOLOGICAL PRODUCTS, INC.	644 W. 12TH ST.	ERIE, PA 16512
73138	BECKMAN INSTRUMENTS, INC., HELIPOT DIV.	2500 HARBOR BLVD.	FULLERTON, CA 92634
78488	STACKPOLE CARBON CO.		ST. MARYS, PA 15857
80009	TEKTRONIX, INC.	P O BOX 500	BEAVERTON, OR 97077
81073	GRAYHILL, INC.	561 HILLGROVE AVE., PO BOX 373	LA GRANGE, IL 60525
90201	MALLORY CAPACITOR CO., DIV. OF P. R. MALLORY AND CO., INC.	3029 E. WASHINGTON STREET P. O. BOX 372	INDIANAPOLIS, IN 46206
91418	RADIO MATERIALS COMPANY, DIV. OF P.R. MALLORY AND COMPANY, INC.	4242 W BRYN MAWR	CHICAGO, IL 60646
91637	DALE ELECTRONICS, INC.	P. O. BOX 609	COLUMBUS, NE 68601
97722	PCA ELECTRONICS	16799 SCHOENBORN ST.	SEPULVEDA, CA 91343

Ckt No.	Tektronix Part No.	Serial/Model No. Eff	Dscont	Name & Description	Mfr Code	Mfr Part Number
A1	670-4289-00	B020000	B020274	CKT BOARD ASSY:WORD RECOGNIZER	80009	670-4289-00
A1	670-4289-01	B020275	B100219	CKT BOARD ASSY:WORD RECOGNIZER	80009	670-4289-01
A1	670-4289-02	B100220		CKT BOARD ASSY:WORD RECOGNIZER	80009	670-4289-02
A2	670-4285-00	B020000	B020274	CKT BOARD ASSY:MEMORY	80009	670-4285-00
A2	670-4285-01	B020275	B100265	CKT BOARD ASSY:MEMORY	80009	670-4285-01
A2	670-4285-02	B100266		CKT BOARD ASSY:MEMORY	80009	670-4285-02
A3	670-4284-00	B020000	B020274	CKT BOARD ASSY:OUTPUT	80009	670-4284-00
A3	670-4284-01	B020275	B087199	CKT BOARD ASSY:OUTPUT	80009	670-4284-01
A3	670-4284-02	B087200	B099999	CKT BOARD ASSY:OUTPUT	80009	670-4284-02
A3	670-4284-03	B100000		CKT BOARD ASSY:OUTPUT	80009	670-4284-03
A4	670-4406-00	B020000	B020274	CKT BOARD ASSY:CURSOR	80009	670-4406-00
A4	670-4406-01	B020275	B049999	CKT BOARD ASSY:CURSOR	80009	670-4406-01
A4	670-4406-02	B050000	B063429	CKT BOARD ASSY:CURSOR	80009	670-4406-02
A4	670-4406-03	B063430	B089999	CKT BOARD ASSY:CURSOR	80009	670-4406-03
A4	670-4406-04	B090000	B100243	CKT BOARD ASSY:CURSOR	80009	670-4406-04
A4	670-4406-05	B100244		CKT BOARD ASSY:CURSOR	80009	670-4406-05
A5	670-4288-00	B020000	B020274	CKT BOARD ASSY:INTERCONNECT	80009	670-4288-00
A5	670-4288-01	B020275		CKT BOARD ASSY:INTERCONNECT	80009	670-4288-01
A6	670-4286-00	B020000	B020274	CKT BOARD ASSY:POWER SUPPLY	80009	670-4286-00
A6	670-4286-01	B020275	B039999	CKT BOARD ASSY:POWER SUPPLY	80009	670-4286-01
A6	670-4286-02	B040000	B069999	CKT BOARD ASSY:POWER SUPPLY	80009	670-4286-00
A6	670-4286-03	B070000	B079999	CKT BOARD ASSY:POWER SUPPLY	80009	670-4286-03
A6	670-4286-04	B080000	B099999	CKT BOARD ASSY:POWER SUPPLY	80009	670-4286-04
A6	670-4286-05	B100000		CKT BOARD ASSY:POWER SUPPLY	80009	670-4286-05
A7	670-6006-00	XB080000		CKT BOARD ASSY:CLOCK QUALIFIER	80009	670-6006-00
C107	281-0513-00			CAP.,FXD,CER DI:27PF,+/-5.4PF,500V	59660	301-055P2G0270M
C110	283-0023-00			CAP.,FXD,CER DI:0.1UF,+80-20%,12V	91418	MX0104Z1205R5
C130	283-0023-00			CAP.,FXD,CER DI:0.1UF,+80-20%,12V	91418	MX0104Z1205R5
C132	283-0663-00	XB086800	B097749	CAP.,FXD,MICA D:16.8PF,+/-0.5PF,500V	00853	D155C16R8D0
C132	283-0149-00	B097750		CAP.,FXD,CER DI:25PF,2%,200V	72982	865-528T2H250G
C150	283-0023-00			CAP.,FXD,CER DI:0.1UF,+80-20%,12V	91418	MX0104Z1205R5
C252	283-0023-00			CAP.,FXD,CER DI:0.1UF,+80-20%,12V	91418	MX0104Z1205R5
C356	283-0023-00			CAP.,FXD,CER DI:0.1UF,+80-20%,12V	91418	MX0104Z1205R5
C445	283-0023-00			CAP.,FXD,CER DI:0.1UF,+80-20%,12V	91418	MX0104Z1205R5
C456	283-0023-00			CAP.,FXD,CER DI:0.1UF,+80-20%,12V	91418	MX0104Z1205R5
C560	283-0023-00			CAP.,FXD,CER DI:0.1UF,+80-20%,12V	91418	MX0104Z1205R5
C601	281-0773-00	XB087200		CAP.,FXD,CER DI:0.01UF,10%,100V	04222	GC70-1C103K
C602	281-0773-00	XB087200		CAP.,FXD,CER DI:0.01UF,10%,100V	04222	GC70-1C103K
C603	281-0814-00	XB087200		CAP.,FXD,CER DI:100PF,10%,100V	04222	GC70-1-A101K
C604	281-0814-00	XB087200	B097346	CAP.,FXD,CER DI:100PF,10%,100V	04222	GC70-1-A101K
C604	281-0775-00	B097347		CAP.,FXD,CER DI:0.1UF,20%,50V	04222	SA205E104MAA
C606	290-0755-00			CAP.,FXD,ELCTLT:100UF,+50-10%,10V	56289	502D223
C631	283-0003-00			CAP.,FXD,CER DI:0.01UF,+80-20%,150V	91418	SP103Z151-4R9
C633	283-0077-00			CAP.,FXD,CER DI:330PF,5%,500V	59660	831-500B331J
C655	290-0782-00			CAP.,FXD,ELCTLT:4.7UF,+75-10%,35V	55680	35ULA4R7V-T
C656	290-0782-00			CAP.,FXD,ELCTLT:4.7UF,+75-10%,35V	55680	35ULA4R7V-T
C664	281-0613-00			CAP.,FXD,CER DI:10PF,+/-1PF,200V	59660	374001C0G100F
C667	290-0534-00			CAP.,FXD,ELCTLT:1UF,20%,35V	56289	196D105X0035HA1
C672	281-0523-00			CAP.,FXD,CER DI:100PF,+/-20PF,500V	72982	301-000U2M0101M
C681	290-0746-00			CAP.,FXD,ELCTLT:47UF,+50-10%,16V	55680	16U-47V-T
C687	281-0523-00			CAP.,FXD,CER DI:100PF,+/-20PF,500V	72982	301-000U2M0101M
C688	290-0746-00			CAP.,FXD,ELCTLT:47UF,+50-10%,16V	55680	16U-47V-T
C692	290-0746-00			CAP.,FXD,ELCTLT:47UF,+50-10%,16V	55680	16U-47V-T
C702	290-0524-00			CAP.,FXD,ELCTLT:4.7UF,20%,10V	90201	TDC475M010EL
C704	290-0522-00			CAP.,FXD,ELCTLT:1UF,20%,50V	56289	196D105X0050HA1
C731	290-0776-00			CAP.,FXD,ELCTLT:22UF,+50-10%,10V	55680	10ULA22V-T

Ckt No.	Tektronix Part No.	Serial/Model No. Eff	Dscont	Name & Description	Mfr Code	Mfr Part Number
C738	283-0164-00			CAP.,FXD,CER DI:2.2UF,20%,25V	72982	8141N037Z5U0225M
C750	285-1050-00			CAP.,FXD,PLSTC:0.1UF,1%,200V	14752	230B1C104F
C752	290-0746-00			CAP.,FXD,ELCTLT:47UF,+50-10%,16V	55680	16U-47V-T
C753	290-0746-00			CAP.,FXD,ELCTLT:47UF,+50-10%,16V	55680	16U-47V-T
C766	281-0523-00			CAP.,FXD,CER DI:100PF,+/-20PF,500V	72982	301-000U2M0101M
C768	290-0746-00			CAP.,FXD,ELCTLT:47UF,+50-10%,16V	55680	16U-47V-T
C780	290-0755-00			CAP.,FXD,ELCTLT:100UF,+50-10%,10V	56289	502D223
C786	290-0755-00			CAP.,FXD,ELCTLT:100UF,+50-10%,10V	56289	502D223
C800	281-0634-00			CAP.,FXD,CER DI:10PF,+/-0.25PF,500V	59660	374 011 C0G0100C
C801	281-0773-00			CAP.,FXD,CER DI:0.01UF,10%,100V	04222	GC70-1C103K
C802	283-0003-00			CAP.,FXD,CER DI:0.01UF,+80-20%,150V	91418	SP103Z151-4R9
C811	283-0023-00			CAP.,FXD,CER DI:0.1UF,+80-20%,12V	91418	MX0104Z1205R5
C813	283-0003-00			CAP.,FXD,CER DI:0.01UF,+80-20%,150V	91418	SP103Z151-4R9
C831	283-0003-00			CAP.,FXD,CER DI:0.01UF,+80-20%,150V	91418	SP103Z151-4R9
C904	290-0512-00	B020000	B079999X	CAP.,FXD,ELCTLT:22UF,20%,15V	56289	196D226X0015KA1
C907	290-0512-00			CAP.,FXD,ELCTLT:22UF,20%,15V	56289	196D226X0015KA1
C911	283-0003-00			CAP.,FXD,CER DI:0.01UF,+80-20%,150V	91418	SP103Z151-4R9
C912	290-0121-00	XB080000		CAP.,FXD,ELCTLT:2UF,+75-10%,25V	56289	30D205G025BA9
C913	283-0003-00	XB010000		CAP.,FXD,CER DI:0.01UF,+80-20%,150V	91418	SP103Z151-4R9
C914	283-0003-00	B020000	B079999X	CAP.,FXD,CER DI:0.01UF,+80-20%,150V	91418	SP103Z151-4R9
C916	290-0512-00	B020000	B079999X	CAP.,FXD,ELCTLT:22UF,20%,15V	56289	196D226X0015KA1
C917	283-0003-00			CAP.,FXD,CER DI:0.01UF,+80-20%,150V	91418	SP103Z151-4R9
C918	283-0083-00			CAP.,FXD,CER DI:0.0047UF,20%,500V	72982	811-565C471J
C920	283-0210-00	B020000	B020274	CAP.,FXD,CER DI:0.0056UF,20%,50V	72982	8131N145W5R562M
C920	283-0238-00	B020275	B069999X	CAP.,FXD,CER DI:0.01UF,10%,50V	72982	8121N075X7R0103K
C921	290-0512-00			CAP.,FXD,ELCTLT:22UF,20%,15V	56289	196D226X0015KA1
C923	283-0077-00	XB070000		CAP.,FXD,CER DI:330PF,5%,500V	59660	831-500B331J
C927	283-0065-00			CAP.,FXD,CER DI:0.001UF,5%,100V	72982	805-518-Z5D0102J
C929	290-0159-00	XB040000		CAP.,FXD,ELCTLT:2UF,+50-10%,150V	56289	30D205F150BB9
C935	290-0746-00			CAP.,FXD,ELCTLT:47UF,+50-10%,16V	55680	16U-47V-T
C944	290-0771-00	B020000	B020099	CAP.,FXD,ELCTLT:220UF,+50-10%,10VDC	56289	502D231
C944	290-0800-00	B020100		CAP.,FXD,ELCTLT:250UF,+100-10%,20V	56289	672D257H0200M5C
C945	290-0771-00			CAP.,FXD,ELCTLT:220UF,+50-10%,10VDC	56289	502D231
C954	290-0771-00			CAP.,FXD,ELCTLT:220UF,+50-10%,10VDC	56289	502D231
C955	290-0771-00			CAP.,FXD,ELCTLT:220UF,+50-10%,10VDC	56289	502D231
C961	283-0003-00			CAP.,FXD,CER DI:0.01UF,+80-20%,150V	91418	SP103Z151-4R9
C967	290-0512-00	B020000	B079999	CAP.,FXD,ELCTLT:22UF,20%,15V	56289	196D226X0015KA1
C967	290-0534-00	B080000		CAP.,FXD,ELCTLT:1UF,20%,35V	56289	196D105X0035HA1
C981	283-0003-00			CAP.,FXD,CER DI:0.01UF,+80-20%,150V	91418	SP103Z151-4R9
C983	290-0425-00	B020000	B020294	CAP.,FXD,ELCTLT:100UF,20%,20V	90201	THF107M020P1G
C983	290-0747-00	B020295	B079999	CAP.,FXD,ELCTLT:100UF,+50-10%,25V	56289	500D148
C983	290-0770-00	B080000		CAP.,FXD,ELCTLT:100UF,+50-10%,25V	56289	502D230
C984	290-0747-00	XB080000		CAP.,FXD,ELCTLT:100UF,+50-10%,25V	56289	500D148
C985	283-0003-00			CAP.,FXD,CER DI:0.01UF,+80-20%,150V	91418	SP103Z151-4R9
C987	290-0425-00	B020000	B020294	CAP.,FXD,ELCTLT:100UF,20%,20V	90201	THF107M020P1G
C987	290-0747-00	B020295	B079999	CAP.,FXD,ELCTLT:100UF,+50-10%,25V	56289	500D148
C987	290-0770-00	B080000		CAP.,FXD,ELCTLT:100UF,+50-10%,25V	56289	502D230
C1202	281-0523-00			CAP.,FXD,CER DI:100PF,+/-20PF,500V	72982	301-000U2M0101M
C1203	283-0024-00	XB100220		CAP.,FXD,CER DI:0.1UF,+80-20%,50V	72982	8121N083Z5U0104Z
C1250	290-0746-00			CAP.,FXD,ELCTLT:47UF,+50-10%,16V	55680	16U-47V-T
C1267	281-0600-00			CAP.,FXD,CER DI:35PF,10%,500V	59660	308-000C0G0350K
C1268	281-0551-00			CAP.,FXD,CER DI:390PF,10%,500V	04222	7001-1363
C1275	283-0203-00			CAP.,FXD,CER DI:0.47UF,20%,50V	72982	8131M058Z5U0474M
C1276	283-0080-00			CAP.,FXD,CER DI:0.022UF,+80-20%,25V	91418	MX223Z2504R0
C1278	283-0024-00			CAP.,FXD,CER DI:0.1UF,+80-20%,50V	72982	8121N083Z5U0104Z
C1279	283-0024-00			CAP.,FXD,CER DI:0.1UF,+80-20%,50V	72982	8121N083Z5U0104Z
C1300	290-0536-00			CAP.,FXD,ELCTLT:10UF,20%,25V	90201	TDC106M025FL

Ckt No.	Tektronix Part No.	Serial/Model No. Eff	Dscont	Name & Description	Mfr Code	Mfr Part Number
C1304	283-0003-00			CAP.,FXD,CER DI:0.01UF,+80-20%,150V	91418	SP103Z151-4R9
C1321	283-0256-00	XB090000		CAP.,FXD,CER DI:130PF,5%,100V	51642	200-100N1500131J
C1322	283-0060-00			CAP.,FXD,CER DI:100PF,5%,200V	72982	855-535U2J101J
C1328	283-0000-00	B020000	B049999	CAP.,FXD,CER DI:0.001UF,+100-0%,500V	59660	831-519-Y5P-102P
C1328	283-0077-00	B050000		CAP.,FXD,CER DI:330PF,5%,500V	59660	831-500B331J
C1329	283-0032-00	B020000	B049999	CAP.,FXD,CER DI:470PF,5%,500V	72982	0831085Z5E00471J
C1329	283-0103-00	B050000		CAP.,FXD,CER DI:180PF,5%,500V	59660	831-518-Z5D0181J
C1336	283-0000-00			CAP.,FXD,CER DI:0.001UF,+100-0%,500V	59660	831-519-Y5P-102P
C1341	283-0341-00	XB063430		CAP.,FXD,CER DI:0.047UF,10%,100V	72982	8121N153X7R0473K
C1342	283-0003-00			CAP.,FXD,CER DI:0.01UF,+80-20%,150V	91418	SP103Z151-4R9
C1343	283-0080-00			CAP.,FXD,CER DI:0.022UF,+80-20%,25V	91418	MX223Z2504R0
C1344	283-0080-00			CAP.,FXD,CER DI:0.022UF,+80-20%,25V	91418	MX223Z2504R0
C1345	283-0341-00	XB063430		CAP.,FXD,CER DI:0.047UF,10%,100V	72982	8121N153X7R0473K
C1348	283-0000-00			CAP.,FXD,CER DI:0.001UF,+100-0%,500V	59660	831-519-Y5P-102P
C1351	283-0341-00	XB063430		CAP.,FXD,CER DI:0.047UF,10%,100V	72982	8121N153X7R0473K
C1352	283-0003-00			CAP.,FXD,CER DI:0.01UF,+80-20%,150V	91418	SP103Z151-4R9
C1353	283-0080-00			CAP.,FXD,CER DI:0.022UF,+80-20%,25V	91418	MX223Z2504R0
C1354	283-0080-00			CAP.,FXD,CER DI:0.022UF,+80-20%,25V	91418	MX223Z2504R0
C1355	283-0341-00	XB063430		CAP.,FXD,CER DI:0.047UF,10%,100V	72982	8121N153X7R0473K
C1364	283-0023-00			CAP.,FXD,CER DI:0.1UF,+80-20%,12V	91418	MX0104Z1205R5
C1366	283-0003-00			CAP.,FXD,CER DI:0.01UF,+80-20%,150V	91418	SP103Z151-4R9
C1410	283-0003-00			CAP.,FXD,CER DI:0.01UF,+80-20%,150V	91418	SP103Z151-4R9
C1422	283-0003-00			CAP.,FXD,CER DI:0.01UF,+80-20%,150V	91418	SP103Z151-4R9
C1438	283-0003-00			CAP.,FXD,CER DI:0.01UF,+80-20%,150V	91418	SP103Z151-4R9
C1502	281-0775-00	XB080000		CAP.,FXD,CER DI:0.1UF,20%,50V	04222	SA205E104MAA
CR105	152-0141-02			SEMICOND DEVICE:SILICON,30V,150MA	01295	1N4152R
CR106	152-0141-02			SEMICOND DEVICE:SILICON,30V,150MA	01295	1N4152R
CR110	152-0141-02			SEMICOND DEVICE:SILICON,30V,150MA	01295	1N4152R
CR111	152-0141-02			SEMICOND DEVICE:SILICON,30V,150MA	01295	1N4152R
CR112	152-0141-02			SEMICOND DEVICE:SILICON,30V,150MA	01295	1N4152R
CR113	152-0141-02			SEMICOND DEVICE:SILICON,30V,150MA	01295	1N4152R
CR114	152-0141-02			SEMICOND DEVICE:SILICON,30V,150MA	01295	1N4152R
CR115	152-0141-02			SEMICOND DEVICE:SILICON,30V,150MA	01295	1N4152R
CR116	152-0141-02			SEMICOND DEVICE:SILICON,30V,150MA	01295	1N4152R
CR117	152-0141-02			SEMICOND DEVICE:SILICON,30V,150MA	01295	1N4152R
CR118	152-0141-02			SEMICOND DEVICE:SILICON,30V,150MA	01295	1N4152R
CR119	152-0141-02			SEMICOND DEVICE:SILICON,30V,150MA	01295	1N4152R
CR120	152-0141-02			SEMICOND DEVICE:SILICON,30V,150MA	01295	1N4152R
CR121	152-0141-02			SEMICOND DEVICE:SILICON,30V,150MA	01295	1N4152R
CR122	152-0141-02			SEMICOND DEVICE:SILICON,30V,150MA	01295	1N4152R
CR123	152-0141-02			SEMICOND DEVICE:SILICON,30V,150MA	01295	1N4152R
CR124	152-0141-02			SEMICOND DEVICE:SILICON,30V,150MA	01295	1N4152R
CR607	152-0141-02			SEMICOND DEVICE:SILICON,30V,150MA	01295	1N4152R
CR608	152-0141-02			SEMICOND DEVICE:SILICON,30V,150MA	01295	1N4152R
CR615	152-0141-02			SEMICOND DEVICE:SILICON,30V,150MA	01295	1N4152R
CR621	152-0075-00			SEMICOND DEVICE:GE,25V,40MA	14433	G866
CR622	152-0141-02			SEMICOND DEVICE:SILICON,30V,150MA	01295	1N4152R
CR628	152-0141-02			SEMICOND DEVICE:SILICON,30V,150MA	01295	1N4152R
CR673	152-0141-02			SEMICOND DEVICE:SILICON,30V,150MA	01295	1N4152R
CR684	152-0075-00			SEMICOND DEVICE:GE,25V,40MA	14433	G866
CR703	152-0141-02			SEMICOND DEVICE:SILICON,30V,150MA	01295	1N4152R
CR709	152-0141-02			SEMICOND DEVICE:SILICON,30V,150MA	01295	1N4152R
CR710	152-0141-02			SEMICOND DEVICE:SILICON,30V,150MA	01295	1N4152R
CR711	152-0141-02			SEMICOND DEVICE:SILICON,30V,150MA	01295	1N4152R
CR712	152-0141-02			SEMICOND DEVICE:SILICON,30V,150MA	01295	1N4152R
CR734	152-0141-02			SEMICOND DEVICE:SILICON,30V,150MA	01295	1N4152R

Ckt No.	Tektronix Part No.	Serial/Model No. Eff	Dscont	Name & Description	Mfr Code	Mfr Part Number
CR738	152-0141-02			SEMICOND DEVICE:SILICON,30V,150MA	01295	1N4152R
CR750	152-0322-00			SEMICOND DEVICE:SILICON,15V,HOT CARRIER	50434	5082-2672
CR753	152-0141-02			SEMICOND DEVICE:SILICON,30V,150MA	01295	1N4152R
CR754	152-0141-02			SEMICOND DEVICE:SILICON,30V,150MA	01295	1N4152R
CR764	152-0075-00			SEMICOND DEVICE:GE,25V,40MA	14433	G866
CR904	152-0141-02	B010100	B079999X	SEMICOND DEVICE:SILICON,30V,150MA	01295	1N4152R
CR905	152-0141-02	B010100	B079999X	SEMICOND DEVICE:SILICON,30V,150MA	01295	1N4152R
CR914	152-0141-02	B010100	B079999X	SEMICOND DEVICE:SILICON,30V,150MA	01295	1N4152R
CR915	152-0141-02	XB080000		SEMICOND DEVICE:SILICON,30V,150MA	01295	1N4152R
CR922	152-0075-00	XB070000		SEMICOND DEVICE:GE,25V,40MA	14433	G866
CR924	152-0075-00	XB070000		SEMICOND DEVICE:GE,25V,40MA	14433	G866
CR927	152-0040-00	XB040000		SEMICOND DEVICE:SILICON,600V,1A	15238	LG109
CR928	152-0040-00	XB040000		SEMICOND DEVICE:SILICON,600V,1A	15238	LG109
CR942	152-0502-00			SEMICOND DEVICE:SILICON,20V,5A	04713	1N5823
CR943	152-0502-00			SEMICOND DEVICE:SILICON,20V,5A	04713	1N5823
CR952	152-0502-00			SEMICOND DEVICE:SILICON,20V,5A	04713	1N5823
CR953	152-0502-00			SEMICOND DEVICE:SILICON,20V,5A	04713	1N5823
CR968	152-0141-02			SEMICOND DEVICE:SILICON,30V,150MA	01295	1N4152R
CR984	152-0141-02	XB080000		SEMICOND DEVICE:SILICON,30V,150MA	01295	1N4152R
CR1251	152-0141-02			SEMICOND DEVICE:SILICON,30V,150MA	01295	1N4152R
CR1252	152-0141-02			SEMICOND DEVICE:SILICON,30V,150MA	01295	1N4152R
CR1261	152-0075-00			SEMICOND DEVICE:GE,25V,40MA	14433	G866
CR1263	152-0141-02			SEMICOND DEVICE:SILICON,30V,150MA	01295	1N4152R
CR1264	152-0141-02			SEMICOND DEVICE:SILICON,30V,150MA	01295	1N4152R
CR1266	152-0141-02			SEMICOND DEVICE:SILICON,30V,150MA	01295	1N4152R
CR1268	152-0141-02			SEMICOND DEVICE:SILICON,30V,150MA	01295	1N4152R
CR1316	152-0075-00			SEMICOND DEVICE:GE,25V,40MA	14433	G866
CR1322	152-0141-02			SEMICOND DEVICE:SILICON,30V,150MA	01295	1N4152R
CR1328	152-0141-02			SEMICOND DEVICE:SILICON,30V,150MA	01295	1N4152R
CR1336	152-0322-00			SEMICOND DEVICE:SILICON,15V,HOT CARRIER	50434	5082-2672
CR1370	152-0141-02			SEMICOND DEVICE:SILICON,30V,150MA	01295	1N4152R
CR1414	152-0141-02			SEMICOND DEVICE:SILICON,30V,150MA	01295	1N4152R
CR1416	152-0141-02			SEMICOND DEVICE:SILICON,30V,150MA	01295	1N4152R
CR1418	152-0141-02			SEMICOND DEVICE:SILICON,30V,150MA	01295	1N4152R
CR1422	152-0141-02			SEMICOND DEVICE:SILICON,30V,150MA	01295	1N4152R
CR1424	152-0075-00			SEMICOND DEVICE:GE,25V,40MA	14433	G866
CR1426	152-0141-02			SEMICOND DEVICE:SILICON,30V,150MA	01295	1N4152R
CR1430	152-0141-02			SEMICOND DEVICE:SILICON,30V,150MA	01295	1N4152R
CR1434	152-0141-02			SEMICOND DEVICE:SILICON,30V,150MA	01295	1N4152R
CR1436	152-0141-02			SEMICOND DEVICE:SILICON,30V,150MA	01295	1N4152R
CR1437	152-0141-02			SEMICOND DEVICE:SILICON,30V,150MA	01295	1N4152R
CR1438	152-0141-02			SEMICOND DEVICE:SILICON,30V,150MA	01295	1N4152R
CR1440	152-0075-00			SEMICOND DEVICE:GE,25V,40MA	14433	G866
CR1442	152-0141-02			SEMICOND DEVICE:SILICON,30V,150MA	01295	1N4152R
CR1446	152-0141-02			SEMICOND DEVICE:SILICON,30V,150MA	01295	1N4152R
CR1452	152-0141-02			SEMICOND DEVICE:SILICON,30V,150MA	01295	1N4152R
CR1453	152-0141-02			SEMICOND DEVICE:SILICON,30V,150MA	01295	1N4152R
CR1454	152-0141-02			SEMICOND DEVICE:SILICON,30V,150MA	01295	1N4152R
CR1456	152-0075-00			SEMICOND DEVICE:GE,25V,40MA	14433	G866
CR1462	152-0141-02			SEMICOND DEVICE:SILICON,30V,150MA	01295	1N4152R
CR1466	152-0141-02			SEMICOND DEVICE:SILICON,30V,150MA	01295	1N4152R
CR1470	152-0141-02			SEMICOND DEVICE:SILICON,30V,150MA	01295	1N4152R
CR1474	152-0141-02			SEMICOND DEVICE:SILICON,30V,150MA	01295	1N4152R
CR1478	152-0141-02			SEMICOND DEVICE:SILICON,30V,150MA	01295	1N4152R
CR1480	152-0141-02			SEMICOND DEVICE:SILICON,30V,150MA	01295	1N4152R
CR1482	152-0141-02			SEMICOND DEVICE:SILICON,30V,150MA	01295	1N4152R
CR1484	152-0141-02			SEMICOND DEVICE:SILICON,30V,150MA	01295	1N4152R

Ckt No.	Tektronix Part No.	Serial/Model No. Eff	Dscont	Name & Description	Mfr Code	Mfr Part Number
CR1485	152-0141-02			SEMICOND DEVICE:SILICON,30V,150MA	01295	1N4152R
CR1486	152-0141-02			SEMICOND DEVICE:SILICON,30V,150MA	01295	1N4152R
CR1487	152-0141-02			SEMICOND DEVICE:SILICON,30V,150MA	01295	1N4152R
CR1488	152-0141-02			SEMICOND DEVICE:SILICON,30V,150MA	01295	1N4152R
CR1489	152-0141-02			SEMICOND DEVICE:SILICON,30V,150MA	01295	1N4152R
CR1504	152-0141-02	XB080000		SEMICOND DEVICE:SILICON,30V,150MA	01295	1N4152R
DL108	119-0823-00	B020000	B059999	DELAY LINE,ELEC:12 NANOSEC,50 OHM	80009	119-0823-00
DL108	119-0823-01	B060000		DELAY LINE,ELEC:15 NANOSEC,50OHM	80009	119-0823-01
DL224	119-0775-00	B020000	B059999	DELAY LINE,ELEC:10NS,100 OHM,24 PIN	97722	EP6879
DL224	119-0775-01	B060000		DELAY LINE,ELEC:12.5NS,100 OHM,24 PIN DBL	01961	PE 22297
DL424	119-0775-00	B020000	B059999	DELAY LINE,ELEC:10NS,100 OHM,24 PIN	97722	EP6879
DL424	119-0775-01	B060000		DELAY LINE,ELEC:12.5NS,100 OHM,24 PIN DBL	01961	PE 22297
DL1262	119-0824-00			DELAY LINE,ELEC:4 NANOSEC,93 OHM	80009	119-0824-00
DL1501	119-0857-00	XB080000		DELAY LINE:DUAL,7.5NS & 5.0NS,100 OHM	97722	EP 7041
DS620	150-1029-00			LT EMITTING DIO:GREEN,565NM,35MA	53184	XC209G
DS708	150-0048-01			LAMP,INCAND:5V,0.06A,SEL	08806	683AS15
L692	276-0569-00	XB020275		CORE,EM:TOROID,FERRITE,0.12 OD X 0.07 ID	78488	57-9660
L768	276-0569-00	XB020000		CORE,EM:TOROID,FERRITE,0.12 OD X 0.07 ID	78488	57-9660
L800	108-0182-00			COIL,RF:0.3UH	80009	108-0182-00
L945	108-0554-00			COIL,RF:5UH	80009	108-0554-00
L955	108-0574-00			COIL,RF:30UH	80009	108-0574-00
L982	108-0728-00			COIL,RF:116UF	80009	108-0728-00
L986	108-0728-00			COIL,RF:116UF	80009	108-0728-00
Q112	151-0188-00			TRANSISTOR:SILICON,PNP	04713	SPS6868K
Q114	151-0188-00			TRANSISTOR:SILICON,PNP	04713	SPS6868K
Q602	151-0188-00			TRANSISTOR:SILICON,PNP	04713	SPS6868K
Q604	151-0190-00			TRANSISTOR:SILICON,NPN	07263	S032677
Q606	151-0504-00			TRANSISTOR:SILICON,N-CHAN,UNIJUNCTION	04713	SU392
Q620	151-0190-00			TRANSISTOR:SILICON,NPN	07263	S032677
Q628	151-0190-00			TRANSISTOR:SILICON,NPN	07263	S032677
Q652	151-0190-00			TRANSISTOR:SILICON,NPN	07263	S032677
Q654	151-0190-00			TRANSISTOR:SILICON,NPN	07263	S032677
Q656	151-0190-00			TRANSISTOR:SILICON,NPN	07263	S032677
Q658	151-0190-00			TRANSISTOR:SILICON,NPN	07263	S032677
Q662	151-0190-00			TRANSISTOR:SILICON,NPN	07263	S032677
Q664	151-0190-00			TRANSISTOR:SILICON,NPN	07263	S032677
Q665	151-0188-00			TRANSISTOR:SILICON,PNP	04713	SPS6868K
Q666	151-0190-00			TRANSISTOR:SILICON,NPN	07263	S032677
Q668	151-0190-00			TRANSISTOR:SILICON,NPN	07263	S032677
Q676	151-0190-00			TRANSISTOR:SILICON,NPN	07263	S032677
Q678	151-0190-00			TRANSISTOR:SILICON,NPN	07263	S032677
Q682	151-0188-00			TRANSISTOR:SILICON,PNP	04713	SPS6868K
Q684	151-0188-00			TRANSISTOR:SILICON,PNP	04713	SPS6868K
Q694	151-0188-00			TRANSISTOR:SILICON,PNP	04713	SPS6868K
Q702	151-0190-00			TRANSISTOR:SILICON,NPN	07263	S032677
Q704	151-0190-00			TRANSISTOR:SILICON,NPN	07263	S032677
Q708	151-0190-00			TRANSISTOR:SILICON,NPN	07263	S032677
Q714	151-0190-00			TRANSISTOR:SILICON,NPN	07263	S032677
Q718	151-0190-00			TRANSISTOR:SILICON,NPN	07263	S032677
Q722	151-0190-00			TRANSISTOR:SILICON,NPN	07263	S032677
Q732	151-0190-00	B020000	B086819	TRANSISTOR:SILICON,NPN	07263	S032677
Q732	151-0341-00	B086820		TRANSISTOR:SILICON,NPN	07263	S040065
Q734	151-0190-00			TRANSISTOR:SILICON,NPN	07263	S032677
Q736	151-0190-00			TRANSISTOR:SILICON,NPN	07263	S032677
Q738	151-0190-00			TRANSISTOR:SILICON,NPN	07263	S032677

Ckt No.	Tektronix Part No.	Serial/Model No. Eff	Dscont	Name & Description	Mfr Code	Mfr Part Number
Q740	151-0190-00			TRANSISTOR:SILICON,NPN	07263	S032677
Q744	151-0223-00			TRANSISTOR:SILICON,NPN	04713	SPS8026
Q748	151-0221-00			TRANSISTOR:SILICON,PNP	04713	SPS246
Q750	151-0301-00			TRANSISTOR:SILICON,PNP	27014	2N2907A
Q754	151-0188-00			TRANSISTOR:SILICON,PNP	04713	SPS6868K
Q762	151-0188-00			TRANSISTOR:SILICON,PNP	04713	SPS6868K
Q764	151-0188-00			TRANSISTOR:SILICON,PNP	04713	SPS6868K
Q768	151-0190-00			TRANSISTOR:SILICON,NPN	07263	S032677
Q772	151-0188-00			TRANSISTOR:SILICON,PNP	04713	SPS6868K
Q784	151-0188-00			TRANSISTOR:SILICON,PNP	04713	SPS6868K
Q903	151-0216-00			TRANSISTOR:SILICON,PNP	04713	SPS8803
Q904	151-0192-00	B020000	B079999X	TRANSISTOR:SILICON,NPN,SEL FROM MPS6521	04713	SPS8801
Q908	151-0192-00			TRANSISTOR:SILICON,NPN,SEL FROM MPS6521	04713	SPS8801
Q910	151-0192-00			TRANSISTOR:SILICON,NPN,SEL FROM MPS6521	04713	SPS8801
Q914	151-0192-00	B020000	B079999X	TRANSISTOR:SILICON,NPN,SEL FROM MPS6521	04713	SPS8801
Q922	151-0192-00	XB070000		TRANSISTOR:SILICON,NPN,SEL FROM MPS6521	04713	SPS8801
Q924	151-0216-00	XB070000		TRANSISTOR:SILICON,PNP	04713	SPS8803
Q926	151-0426-00	B020000	B075290	TRANSISTOR:SILICON,NPN	03508	X44H242
Q928	151-0426-00	B020000	B075290	TRANSISTOR:SILICON,NPN	03508	X44H242
Q926, Q928	153-0649-00	B075291		TRANSISTOR:SILICON,NPN,MATCHED	80009	153-0649-00
Q962	151-0426-00			TRANSISTOR:SILICON,NPN	03508	X44H242
Q964	151-0190-00			TRANSISTOR:SILICON,NPN	07263	S032677
Q968	151-0192-00			TRANSISTOR:SILICON,NPN,SEL FROM MPS6521	04713	SPS8801
Q1202	151-0188-00			TRANSISTOR:SILICON,PNP	04713	SPS6868K
Q1204	151-0223-00			TRANSISTOR:SILICON,NPN	04713	SPS8026
Q1206	151-0223-00			TRANSISTOR:SILICON,NPN	04713	SPS8026
Q1208	151-0190-00			TRANSISTOR:SILICON,NPN	07263	S032677
Q1212	151-0190-00			TRANSISTOR:SILICON,NPN	07263	S032677
Q1254	151-0188-00	B020000	B100219	TRANSISTOR:SILICON,PNP	04713	SPS6868K
Q1254	151-0438-01	B100220		TRANSISTOR:SILICON,PNP,SELECTED	80009	151-0438-01
Q1258	151-0188-00	B020000	B100219	TRANSISTOR:SILICON,PNP	04713	SPS6868K
Q1258	151-0438-01	B100220		TRANSISTOR:SILICON,PNP,SELECTED	80009	151-0438-01
Q1262	151-0188-00			TRANSISTOR:SILICON,PNP	04713	SPS6868K
Q1268	151-0190-00			TRANSISTOR:SILICON,NPN	07263	S032677
Q1302	151-0341-00			TRANSISTOR:SILICON,NPN	07263	S040065
Q1304	151-0341-00			TRANSISTOR:SILICON,NPN	07263	S040065
Q1308	151-0341-00			TRANSISTOR:SILICON,NPN	07263	S040065
Q1312	151-0341-00			TRANSISTOR:SILICON,NPN	07263	S040065
Q1316	151-0341-00			TRANSISTOR:SILICON,NPN	07263	S040065
Q1372	151-0341-00			TRANSISTOR:SILICON,NPN	07263	S040065
Q1376	151-0223-00			TRANSISTOR:SILICON,NPN	04713	SPS8026
Q1404	151-0190-00			TRANSISTOR:SILICON,NPN	07263	S032677
Q1406	151-0188-00			TRANSISTOR:SILICON,PNP	04713	SPS6868K
Q1412	151-0341-00			TRANSISTOR:SILICON,NPN	07263	S040065
Q1414	151-0190-00			TRANSISTOR:SILICON,NPN	07263	S032677
Q1416	151-0221-00			TRANSISTOR:SILICON,PNP	04713	SPS246
Q1417	151-0190-00			TRANSISTOR:SILICON,NPN	07263	S032677
Q1418	151-0221-00			TRANSISTOR:SILICON,PNP	04713	SPS246
Q1422	151-0342-00			TRANSISTOR:SILICON,PNP	07263	S035928
Q1426	151-0342-00			TRANSISTOR:SILICON,PNP	07263	S035928
Q1430	151-0342-00			TRANSISTOR:SILICON,PNP	07263	S035928
Q1434	151-0342-00			TRANSISTOR:SILICON,PNP	07263	S035928
Q1436	151-1097-00			TRANSISTOR:SILICON,FE	04713	SPF713
Q1442	151-0342-00			TRANSISTOR:SILICON,PNP	07263	S035928
Q1446	151-0342-00			TRANSISTOR:SILICON,PNP	07263	S035928
Q1450	151-0342-00			TRANSISTOR:SILICON,PNP	07263	S035928

Ckt No.	Tektronix Part No.	Serial/Model No. Eff	Dscont	Name & Description	Mfr Code	Mfr Part Number
Q1452	151-1097-00			TRANSISTOR:SILICON,FE	04713	SPF713
Q1454	151-0342-00			TRANSISTOR:SILICON,PNP	07263	S035928
Q1458	151-0342-00			TRANSISTOR:SILICON,PNP	07263	S035928
Q1462	151-0342-00			TRANSISTOR:SILICON,PNP	07263	S035928
Q1466	151-0342-00			TRANSISTOR:SILICON,PNP	07263	S035928
Q1470	151-0342-00			TRANSISTOR:SILICON,PNP	07263	S035928
Q1474	151-0342-00			TRANSISTOR:SILICON,PNP	07263	S035928
Q1478	151-0342-00			TRANSISTOR:SILICON,PNP	07263	S035928
Q1482	151-0342-00			TRANSISTOR:SILICON,PNP	07263	S035928
Q1484	151-1097-00			TRANSISTOR:SILICON,FE	04713	SPF713
Q1486	151-0341-00			TRANSISTOR:SILICON,NPN	07263	S040065
Q1487	151-0342-00			TRANSISTOR:SILICON,PNP	07263	S035928
Q1488	151-1097-00			TRANSISTOR:SILICON,FE	04713	SPF713
Q1497	151-0190-00			TRANSISTOR:SILICON,NPN	07263	S032677
Q1498	151-0188-00			TRANSISTOR:SILICON,PNP	04713	SPS6868K
R104	315-0510-00			RES.,FXD,CMPSN:51 OHM,5%,0.25W	01121	CB5105
R105	315-0510-00			RES.,FXD,CMPSN:51 OHM,5%,0.25W	01121	CB5105
R106	315-0240-00			RES.,FXD,CMPSN:24 OHM,5%,0.25W	01121	CB2405
R107	315-0430-00			RES.,FXD,CMPSN:43 OHM,5%,0.25W	01121	CB4305
R108	315-0271-00			RES.,FXD,CMPSN:270 OHM,5%,0.25W	01121	CB2715
R111	307-0488-00			RES,NTWK,FXD,FI:100 OHM,20%,0.75W	01121	206A101
R112	315-0272-00			RES.,FXD,CMPSN:2.7K OHM,5%,0.25W	01121	CB2725
R113	307-0488-00			RES,NTWK,FXD,FI:100 OHM,20%,0.75W	01121	206A101
R114	315-0272-00			RES.,FXD,CMPSN:2.7K OHM,5%,0.25W	01121	CB2725
R115	315-0104-00			RES.,FXD,CMPSN:100K OHM,5%,0.25W	01121	CB1045
R119	315-0272-00			RES.,FXD,CMPSN:2.7K OHM,5%,0.25W	01121	CB2725
R120	315-0272-00			RES.,FXD,CMPSN:2.7K OHM,5%,0.25W	01121	CB2725
R121	307-0489-00			RES,NTWK,FXD,FI:100 OHM,20%,1W	32997	4308R-101-101
R122	315-0272-00			RES.,FXD,CMPSN:2.7K OHM,5%,0.25W	01121	CB2725
R124	315-0272-00			RES.,FXD,CMPSN:2.7K OHM,5%,0.25W	01121	CB2725
R125	315-0272-00			RES.,FXD,CMPSN:2.7K OHM,5%,0.25W	01121	CB2725
R141	307-0492-00			RES.NTWK,FXD FI:(3)50 OHM,5%,0.125W	91637	CSP04C01-500J
R150	315-0511-00			RES.,FXD,CMPSN:510 OHM,5%,0.25W	01121	CB5115
R151	307-0493-00			RES,NTWK,FXD,FI:(7)50 OHM,5%,0.125W	32997	4308R-101-500
R221	307-0488-00			RES,NTWK,FXD,FI:100 OHM,20%,0.75W	01121	206A101
R223	315-0272-00			RES.,FXD,CMPSN:2.7K OHM,5%,0.25W	01121	CB2725
R241	307-0489-00			RES,NTWK,FXD,FI:100 OHM,20%,1W	32997	4308R-101-101
R251	307-0488-00			RES,NTWK,FXD,FI:100 OHM,20%,0.75W	01121	206A101
R261	307-0489-00			RES,NTWK,FXD,FI:100 OHM,20%,1W	32997	4308R-101-101
R321	307-0487-00			RES,NTWK,FXD,FI:100 OHM,20%,0.50W	91637	CSC04C01-101J
R341	307-0489-00			RES,NTWK,FXD,FI:100 OHM,20%,1W	32997	4308R-101-101
R351	307-0488-00			RES,NTWK,FXD,FI:100 OHM,20%,0.75W	01121	206A101
R361	307-0489-00			RES,NTWK,FXD,FI:100 OHM,20%,1W	32997	4308R-101-101
R421	307-0487-00			RES,NTWK,FXD,FI:100 OHM,20%,0.50W	91637	CSC04C01-101J
R441	307-0489-00			RES,NTWK,FXD,FI:100 OHM,20%,1W	32997	4308R-101-101
R451	307-0487-00			RES,NTWK,FXD,FI:100 OHM,20%,0.50W	91637	CSC04C01-101J
R461	307-0489-00			RES,NTWK,FXD,FI:100 OHM,20%,1W	32997	4308R-101-101
R521	307-0487-00			RES,NTWK,FXD,FI:100 OHM,20%,0.50W	91637	CSC04C01-101J
R531	307-0489-00			RES,NTWK,FXD,FI:100 OHM,20%,1W	32997	4308R-101-101
R541	307-0489-00			RES,NTWK,FXD,FI:100 OHM,20%,1W	32997	4308R-101-101
R551	307-0489-00			RES,NTWK,FXD,FI:100 OHM,20%,1W	32997	4308R-101-101
R561	307-0487-00			RES,NTWK,FXD,FI:100 OHM,20%,0.50W	91637	CSC04C01-101J
R600	307-0487-00			RES,NTWK,FXD,FI:100 OHM,20%,0.50W	91637	CSC04C01-101J
R601	307-0489-00			RES,NTWK,FXD,FI:100 OHM,20%,1W	32997	4308R-101-101
R602	315-0182-00			RES.,FXD,CMPSN:1.8K OHM,5%,0.25W	01121	CB1825
R603	315-0103-00			RES.,FXD,CMPSN:10K OHM,5%,0.25W	01121	CB1035
R604	315-0302-00	B020000	B020274	RES.,FXD,CMPSN:3K OHM,5%,0.25W	01121	CB3025

Ckt No.	Tektronix Part No.	Serial/Model No. Eff	Dscont	Name & Description	Mfr Code	Mfr Part Number
R604	315-0752-00	B020275		RES.,FXD,CMPSN:7.5K OHM,5%,0.25W	01121	CB7525
R605	311-1883-00			RES.,VAR,NONWIR:10K OHM,1W	01121	14M870
R606	315-0331-00			RES.,FXD,CMPSN:330 OHM,5%,0.25W	01121	CB3315
R607	315-0102-00			RES.,FXD,CMPSN:1K OHM,5%,0.25W	01121	CB1025
R608	315-0821-00			RES.,FXD,CMPSN:820 OHM,5%,0.25W	01121	CB8215
R609	315-0510-00			RES.,FXD,CMPSN:51 OHM,5%,0.25W	01121	CB5105
R611	307-0489-00			RES,NTWK,FXD,FI:100 OHM,20%,1W	32997	4308R-101-101
R613	315-0362-00			RES.,FXD,CMPSN:3.6K OHM,5%,0.25W	01121	CB3625
R614	315-0102-00			RES.,FXD,CMPSN:1K OHM,5%,0.25W	01121	CB1025
R615	315-0272-00			RES.,FXD,CMPSN:2.7K OHM,5%,0.25W	01121	CB2725
R616	315-0242-00			RES.,FXD,CMPSN:2.4K OHM,5%,0.25W	01121	CB2425
R617	315-0242-00			RES.,FXD,CMPSN:2.4K OHM,5%,0.25W	01121	CB2425
R618	315-0242-00			RES.,FXD,CMPSN:2.4K OHM,5%,0.25W	01121	CB2425
R619	315-0510-00			RES.,FXD,CMPSN:51 OHM,5%,0.25W	01121	CB5105
R620	315-0271-00			RES.,FXD,CMPSN:270 OHM,5%,0.25W	01121	CB2715
R621	307-0489-00			RES,NTWK,FXD,FI:100 OHM,20%,1W	32997	4308R-101-101
R622	315-0102-00			RES.,FXD,CMPSN:1K OHM,5%,0.25W	01121	CB1025
R623	315-0182-00			RES.,FXD,CMPSN:1.8K OHM,5%,0.25W	01121	CB1825
R625	311-1227-00			RES.,VAR,NONWIR:5K OHM,20%,0.50W	32997	3386F-T04-502
R627	321-0231-00			RES.,FXD,FILM:2.49K OHM,1%,0.125W	91637	MFF1816G24900F
R628	321-0277-00			RES.,FXD,FILM:7.5K OHM,1%,0.125W	91637	MFF1816G75000F
R629	315-0271-00			RES.,FXD,CMPSN:270 OHM,5%,0.25W	01121	CB2715
R631	307-0486-00			RES,NTWK,THK FI:100 OHM,20%,1.125W	91637	MSP10A01-101J
R633	315-0272-00			RES.,FXD,CMPSN:2.7K OHM,5%,0.25W	01121	CB2725
R652	315-0102-00			RES.,FXD,CMPSN:1K OHM,5%,0.25W	01121	CB1025
R653	321-0268-00			RES.,FXD,FILM:6.04K OHM,1%,0.125W	91637	MFF1816G60400F
R655	321-0202-00			RES.,FXD,FILM:1.24K OHM,1%,0.125W	91637	MFF1816G12400F
R656	315-0102-00			RES.,FXD,CMPSN:1K OHM,5%,0.25W	01121	CB1025
R657	321-0297-00			RES.,FXD,FILM:12.1K OHM,1%,0.125W	91637	MFF1816G12101F
R662	315-0102-00			RES.,FXD,CMPSN:1K OHM,5%,0.25W	01121	CB1025
R663	321-0335-00			RES.,FXD,FILM:30.1K OHM,1%,0.125W	91637	MFF1816G30101F
R664	321-0213-00			RES.,FXD,FILM:1.62K OHM,1%,0.125W	91637	MFF1816G16200F
R665	321-0193-00			RES.,FXD,FILM:1K OHM,1%,0.125W	91637	MFF1816G10000F
R666	315-0102-00			RES.,FXD,CMPSN:1K OHM,5%,0.25W	01121	CB1025
R667	321-0364-00			RES.,FXD,FILM:60.4K OHM,1%,0.125W	91637	MFF1816G60401F
R668	321-0248-00			RES.,FXD,FILM:3.74K OHM,1%,0.125W	91637	MFF1816G37400F
R671	315-0101-00			RES.,FXD,CMPSN:100 OHM,5%,0.25W	01121	CB1015
R672	315-0621-00			RES.,FXD,CMPSN:620 OHM,5%,0.25W	01121	CB6215
R673	315-0822-00			RES.,FXD,CMPSN:8.2K OHM,5%,0.25W	01121	CB8225
R674	321-0202-00			RES.,FXD,FILM:1.24K OHM,1%,0.125W	91637	MFF1816G12400F
R675	321-0248-00			RES.,FXD,FILM:3.74K OHM,1%,0.125W	91637	MFF1816G37400F
R676	315-0621-00			RES.,FXD,CMPSN:620 OHM,5%,0.25W	01121	CB6215
R678	321-0239-00			RES.,FXD,FILM:3.01K OHM,1%,0.125W	91637	MFF1816G30100F
R680	311-1831-00	B020000	B086359	RES.,VAR,NONWIR:2.5 X 1K OHM,10%,0.50W	12697	388CM40965
	----- -----			(FURNISHED AS A UNIT WITH R695)		
R680	311-1831-01	B086360		RES.,VAR,NONWIR:2.5 X 1K OHM,10%,0.50W	12697	CM41747
	----- -----			(FURNISHED AS A UNIT WITH R695)		
R681	321-0198-00			RES.,FXD,FILM:1.13K OHM,1%,0.125W	91637	MFF1816G11300F
R682	321-0206-00			RES.,FXD,FILM:1.37K OHM,1%,0.125W	91637	MFF1816G13700F
R683	322-1115-00			RES.,FXD,FILM:156 OHM,10%,0.25W	91637	MFF1421G156R0F
R684	321-0143-00			RES.,FXD,FILM:301 OHM,1%,0.125W	91637	MFF1816G301R0F
R685	321-0193-00			RES.,FXD,FILM:1K OHM,1%,0.125W	91637	MFF1816G10000F
R686	321-0143-00			RES.,FXD,FILM:301 OHM,1%,0.125W	91637	MFF1816G301R0F
R687	321-0193-00			RES.,FXD,FILM:1K OHM,1%,0.125W	91637	MFF1816G10000F
R688	315-0150-00			RES.,FXD,CMPSN:15 OHM,5%,0.25W	01121	CB1505
R691	315-0242-00			RES.,FXD,CMPSN:2.4K OHM,5%,0.25W	01121	CB2425
R692	321-0204-00			RES.,FXD,FILM:1.3K OHM,1%,0.125W	91637	MFF1816G13000F

Ckt No.	Tektronix Part No.	Serial/Model No. Eff	Dscont	Name & Description	Mfr Code	Mfr Part Number
R693	321-0193-00			RES.,FXD,FILM:1K OHM,1%,0.125W	91637	MFF1816G10000F
R694	321-0173-00			RES.,FXD,FILM:619 OHM,1%,0.125W	91637	MFF1816G619R0F
R695	311-1831-00	B020000	B086359	RES.,VAR,NONWIR:2.5 X 1K OHM,10%,0.50W	12697	388CM40965
	----- -----			(FURNISHED AS A UNIT WTIH R680)		
R695	311-1831-01	B086360		RES.,VAR,NONWIR:2.5 X 1K OHM,10%,0.50W	12697	CM41747
	----- -----			(FURNISHED AS A UNIT WITH R680)		
R696	321-0157-00			RES.,FXD,FILM:422 OHM,1%,0.125W	91637	MFF1816G422R0F
R697	321-0177-00			RES.,FXD,FILM:681 OHM,1%,0.125W	91637	MFF1816G681R0F
R698	321-0164-00			RES.,FXD,FILM:499 OHM,1%,0.125W	91637	MFF1816G499R0F
R699	321-0118-00			RES.,FXD,FILM:165 OHM,1%,0.125W	91637	MFF1816G165R0F
R701	315-0563-00			RES.,FXD,CMPSN:56K OHM,5%,0.25W	01121	CB5635
R702	315-0102-00			RES.,FXD,CMPSN:1K OHM,5%,0.25W	01121	CB1025
R703	315-0563-00			RES.,FXD,CMPSN:56K OHM,5%,0.25W	01121	CB5635
R704	315-0102-00			RES.,FXD,CMPSN:1K OHM,5%,0.25W	01121	CB1025
R707	315-0302-00			RES.,FXD,CMPSN:3K OHM,5%,0.25W	01121	CB3025
R708	315-0200-00			RES.,FXD,CMPSN:20 OHM,5%,0.25W	01121	CB2005
R709	315-0272-00			RES.,FXD,CMPSN:2.7K OHM,5%,0.25W	01121	CB2725
R712	315-0104-00			RES.,FXD,CMPSN:100K OHM,5%,0.25W	01121	CB1045
R713	315-0513-00			RES.,FXD,CMPSN:51K OHM,5%,0.25W	01121	CB5135
R714	315-0104-00			RES.,FXD,CMPSN:100K OHM,5%,0.25W	01121	CB1045
R715	321-0356-00			RES.,FXD,FILM:49.9K OHM,1%,0.125W	91637	MFF1816G49901F
R716	315-0104-00			RES.,FXD,CMPSN:100K OHM,5%,0.25W	01121	CB1045
R717	315-0513-00			RES.,FXD,CMPSN:51K OHM,5%,0.25W	01121	CB5135
R718	321-0356-00			RES.,FXD,FILM:49.9K OHM,1%,0.125W	91637	MFF1816G49901F
R720	315-0202-00			RES.,FXD,CMPSN:2K OHM,5%,0.25W	01121	CB2025
R721	315-0302-00			RES.,FXD,CMPSN:3K OHM,5%,0.25W	01121	CB3025
R731	307-0106-00			RES.,FXD,CMPSN:4.7 OHM,5%,0.25W	01121	CB47G5
R732	315-0271-00			RES.,FXD,CMPSN:270 OHM,5%,0.25W	01121	CB2715
R733	315-0271-00			RES.,FXD,CMPSN:270 OHM,5%,0.25W	01121	CB2715
R734	315-0391-00			RES.,FXD,CMPSN:390 OHM,5%,0.25W	01121	CB3915
R735	321-0202-00			RES.,FXD,FILM:1.24K OHM,1%,0.125W	91637	MFF1816G12400F
R736	321-0248-00			RES.,FXD,FILM:3.74K OHM,1%,0.125W	91637	MFF1816G37400F
R737	315-0683-00			RES.,FXD,CMPSN:68K OHM,5%,0.25W	01121	CB6835
R738	315-0113-00			RES.,FXD,CMPSN:11K OHM,5%,0.25W	01121	CB1135
R739	315-0331-00			RES.,FXD,CMPSN:330 OHM,5%,0.25W	01121	CB3315
R740	315-0271-00			RES.,FXD,CMPSN:270 OHM,5%,0.25W	01121	CB2715
R741	315-0510-00			RES.,FXD,CMPSN:51 OHM,5%,0.25W	01121	CB5105
R743	315-0161-00			RES.,FXD,CMPSN:160 OHM,5%,0.25W	01121	CB1615
R744	315-0102-00			RES.,FXD,CMPSN:1K OHM,5%,0.25W	01121	CB1025
R752	315-0220-00			RES.,FXD,CMPSN:22 OHM,5%,0.25W	01121	CB2205
R753	315-0272-00			RES.,FXD,CMPSN:2.7K OHM,5%,0.25W	01121	CB2725
R754	315-0272-00	B020000	B020614	RES.,FXD,CMPSN:2.7K OHM,5%,0.25W	01121	CB2725
R754	315-0392-00	B020615		RES.,FXD,CMPSN:3.9K OHM,5%,0.25W	01121	CB3925
R760	321-0198-00			RES.,FXD,FILM:1.13K OHM,1%,0.125W	91637	MFF1816G11300F
R761	321-0206-00			RES.,FXD,FILM:1.37K OHM,1%,0.125W	91637	MFF1816G13700F
R762	322-1115-00			RES.,FXD,FILM:156 OHM,10%,0.25W	91637	MFF1421G156R0F
R764	321-0143-00			RES.,FXD,FILM:301 OHM,1%,0.125W	91637	MFF1816G301R0F
R765	321-0143-00			RES.,FXD,FILM:301 OHM,1%,0.125W	91637	MFF1816G301R0F
R766	321-0193-00			RES.,FXD,FILM:1K OHM,1%,0.125W	91637	MFF1816G10000F
R767	321-0193-00			RES.,FXD,FILM:1K OHM,1%,0.125W	91637	MFF1816G10000F
R768	321-0256-00			RES.,FXD,FILM:4.53K OHM,1%,0.125W	91637	MFF1816G45300F
R769	321-0170-00	B020000	B020684	RES.,FXD,FILM:576 OHM,1%,0.125W	91637	MFF1816G576R0F
R769	321-0178-00	B020685		RES.,FXD,FILM:698 OHM,1%,0.125W	91637	MFF1816G698R0F
R770	321-0307-00			RES.,FXD,FILM:15.4K OHM,1%,0.125W	91637	MFF1816G15401F
R771	321-0213-00			RES.,FXD,FILM:1.62K OHM,1%,0.125W	91637	MFF1816G16200F
R772	321-0193-00			RES.,FXD,FILM:1K OHM,1%,0.125W	91637	MFF1816G10000F
R774	321-0191-00			RES.,FXD,FILM:953 OHM,1%,0.125W	91637	MFF1816G953R0F

Ckt No.	Tektronix Part No.	Serial/Model No. Eff	Dscont	Name & Description	Mfr Code	Mfr Part Number
R775	321-0145-00			RES.,FXD,FILM:316 OHM,1%,0.125W	91637	MFF1816G316R0F
R780	321-0204-00			RES.,FXD,FILM:1.3K OHM,1%,0.125W	91637	MFF1816G13000F
R781	321-0193-00			RES.,FXD,FILM:1K OHM,1%,0.125W	91637	MFF1816G10000F
R782	315-0102-00			RES.,FXD,CMPSN:1K OHM,5%,0.25W	01121	CB1025
R783	321-0138-00			RES.,FXD,FILM:267 OHM,1%,0.125W	91637	MFF1816G267R0F
R784	321-0167-00			RES.,FXD,FILM:536 OHM,1%,0.125W	91637	MFF1816G536R0F
R785	321-0167-00			RES.,FXD,FILM:536 OHM,1%,0.125W	91637	MFF1816G536R0F
R786	315-0360-00			RES.,FXD,CMPSN:36 OHM,5%,0.25W	01121	CB3605
R788	311-1831-00	B020000	B086359	RES.,VAR,NONWIR:2.5 X 1K OHM,10%,0.50W	12697	388CM40965
	----- -----			(FURNISHED AS A UNIT WITH R790)		
R788	311-1831-01	B086360		RES.,VAR,NONWIR:2.5 X 1K OHM,10%,0.50W	12697	CM41747
	----- -----			(FURNISHED AS A UNIT WITH R790)		
R790	311-1831-00	B020000	B086359	RES.,VAR,NONWIR:2.5 X 1K OHM,10%,0.50W	12697	388CM40965
	----- -----			(FURNISHED AS A UNIT WITH R788)		
R790	311-1831-01	B086360		RES.,VAR,NONWIR:2.5 X 1K OHM,10%,0.50W	12697	CM41747
	----- -----			(FURNISHED AS A UNIT WITH R788)		
R800	315-0512-00			RES.,FXD,CMPSN:5.1K OHM,5%,0.25W	01121	CB5125
R801	307-0493-00			RES,NTWK,FXD,FI:(7)50 OHM,5%,0.125W	32997	4308R-101-500
R811	307-0489-00			RES,NTWK,FXD,FI:100 OHM,20%,1W	32997	4308R-101-101
R821	307-0488-00			RES,NTWK,FXD,FI:100 OHM,20%,0.75W	01121	206A101
R831	307-0492-00			RES.NTWK,FXD FI:(3)50 OHM,5%,0.125W	91637	CSP04C01-500J
R835	315-0101-00			RES.,FXD,CMPSN:100 OHM,5%,0.25W	01121	CB1015
R902	315-0822-00			RES.,FXD,CMPSN:8.2K OHM,5%,0.25W	01121	CB8225
R903	315-0103-00			RES.,FXD,CMPSN:10K OHM,5%,0.25W	01121	CB1035
R904	315-0104-00	B020000	B079999X	RES.,FXD,CMPSN:100K OHM,5%,0.25W	01121	CB1045
R905	315-0152-00	B020000	B079999X	RES.,FXD,CMPSN:1.5K OHM,5%,0.25W	01121	CB1525
R907	321-0320-00			RES.,FXD,FILM:21K OHM,1%,0.125W	91637	MFF1816G21001F
R908	321-0354-00			RES.,FXD,FILM:47.5K OHM,1%,0.125W	91637	MFF1816G47501F
R910	315-0473-00	B020000	B079999	RES.,FXD,CMPSN:47K OHM,5%,0.25W	01121	CB4735
R910	315-0223-00	B080000		RES.,FXD,CMPSN:22K OHM,5%,0.25W	01121	CB2235
R912	315-0684-00	XB080000		RES.,FXD,CMPSN:680K OHM,5%,0.25W	01121	CB6845
R913	315-0102-00	XB080000		RES.,FXD,CMPSN:1K OHM,5%,0.25W	01121	CB1025
R914	315-0104-00	B020000	B079999X	RES.,FXD,CMPSN:100K OHM,5%,0.25W	01121	CB1045
R915	315-0152-00	B020000	B079999X	RES.,FXD,CMPSN:1.5K OHM,5%,0.25W	01121	CB1525
R916	315-0101-00	B020000	B079999X	RES.,FXD,CMPSN:100 OHM,5%,0.25W	01121	CB1015
R918	321-0269-00			RES.,FXD,FILM:6.19K OHM,1%,0.125W	91637	MFF1816G61900F
R919	321-0234-00			RES.,FXD,FILM:2.67K OHM,1%,0.125W	91637	MFF1816G26700F
R920	315-0101-00	B020000	B020274	RES.,FXD,CMPSN:100 OHM,5%,0.25W	01121	CB1015
R920	315-0510-00	B020275	B069999X	RES.,FXD,CMPSN:51 OHM,5%,0.25W	01121	CB5105
R921	315-0201-00			RES.,FXD,CMPSN:200 OHM,5%,0.25W	01121	CB2015
R923	315-0152-00	XB070000		RES.,FXD,CMPSN:1.5K OHM,5%,0.25W	01121	CB1525
R925	315-0152-00	XB070000		RES.,FXD,CMPSN:1.5K OHM,5%,0.25W	01121	CB1525
R927	315-0101-00			RES.,FXD,CMPSN:100 OHM,5%,0.25W	01121	CB1015
R961	308-0459-00			RES.,FXD,WW:1.1 OHM,5%,3W	91637	CW2B-1R100J
R966	321-0193-00			RES.,FXD,FILM:1K OHM,1%,0.125W	91637	MFF1816G10000F
R967	321-0288-00			RES.,FXD,FILM:9.76K OHM,1%,0.125W	91637	MFF1816G97600F
R968	315-0391-00			RES.,FXD,CMPSN:390 OHM,5%,0.25W	01121	CB3915
R1201	315-0102-00			RES.,FXD,CMPSN:1K OHM,5%,0.25W	01121	CB1025
R1202	315-0301-00			RES.,FXD,CMPSN:300 OHM,5%,0.25W	01121	CB3015
R1203	315-0101-00			RES.,FXD,CMPSN:100 OHM,5%,0.25W	01121	CB1015
R1204	315-0201-00			RES.,FXD,CMPSN:200 OHM,5%,0.25W	01121	CB2015
R1206	315-0101-00			RES.,FXD,CMPSN:100 OHM,5%,0.25W	01121	CB1015
R1207	315-0101-00			RES.,FXD,CMPSN:100 OHM,5%,0.25W	01121	CB1015
R1208	315-0202-00			RES.,FXD,CMPSN:2K OHM,5%,0.25W	01121	CB2025
R1209	321-0202-00			RES.,FXD,FILM:1.24K OHM,1%,0.125W	91637	MFF1816G12400F
R1210	321-0248-00			RES.,FXD,FILM:3.74K OHM,1%,0.125W	91637	MFF1816G37400F
R1211	315-0101-00			RES.,FXD,CMPSN:100 OHM,5%,0.25W	01121	CB1015

Ckt No.	Tektronix Part No.	Serial/Model No. Eff	Dscont	Name & Description	Mfr Code	Mfr Part Number
R1212	315-0202-00			RES.,FXD,CMPSN:2K OHM,5%,0.25W	01121	CB2025
R1213	315-0621-00			RES.,FXD,CMPSN:620 OHM,5%,0.25W	01121	CB6215
R1220	307-0103-00			RES.,FXD,CMPSN:2.7 OHM,5%,0.25W	01121	CB27G5
R1223	307-0488-00			RES,NTWK,FXD,FI:100 OHM,20%,0.75W	01121	206A101
R1225	307-0501-00			RES,NTWK,FXD,FI:THICK FILM,(5) 50 OHM,5%	91637	MSP06A01-500J
R1227	307-0493-00			RES,NTWK,FXD,FI:(7)50 OHM,5%,0.125W	32997	4308R-101-500
R1229	307-0486-00			RES,NTWK,THK FI·100 OHM,20%,1.125W	91637	MSP10A01-101J
R1230	307-0493-00			RES,NTWK,FXD,FI:(7)50 OHM,5%,0.125W	32997	4308R-101-500
R1231	307-0493-00			RES,NTWK,FXD,FI:(7)50 OHM,5%,0.125W	32997	4308R-101-500
R1232	307-0110-00			RES.,FXD,CMPSN:3 OHM,5%,0.25W	01121	CB30G5
R1233	307-0493-00			RES,NTWK,FXD,FI:(7)50 OHM,5%,0.125W	32997	4308R-101-500
R1235	307-0493-00			RES,NTWK,FXD,FI:(7)50 OHM,5%,0.125W	32997	4308R-101-500
R1251	315-0101-00			RES.,FXD,CMPSN:100 OHM,5%,0.25W	01121	CB1015
R1253	315-0241-00			RES.,FXD,CMPSN:240 OHM,5%,0.25W	01121	CB2415
R1255	307-0489-00			RES,NTWK,FXD,FI:100 OHM,20%,1W	32997	4308R-101-101
R1256	321-0247-00			RES.,FXD,FILM:3.65K OHM,1%,0.125W	91637	MFF1816G36500F
R1257	321-0207-00			RES.,FXD,FILM:1.4K OHM,1%,0.125W	91637	MFF1816G14000F
R1258	315-0101-00			RES.,FXD,CMPSN:100 OHM,5%,0.25W	01121	CB1015
R1260	315-0101-00			RES.,FXD,CMPSN:100 OHM,5%,0.25W	01121	CB1015
R1262	315-0103-00			RES.,FXD,CMPSN:10K OHM,5%,0.25W	01121	CB1035
R1263	315-0272-00			RES.,FXD,CMPSN:2.7K OHM,5%,0.25W	01121	CB2725
R1264	315-0272-00			RES.,FXD,CMPSN:2.7K OHM,5%,0.25W	01121	CB2725
R1265	311-1590-00			RES.,VAR,NONWIR:10K OHM,10%,1W	12697	CM40256
R1266	315-0272-00			RES.,FXD,CMPSN:2.7K OHM,5%,0.25W	01121	CB2725
R1267	315-0161-00			RES.,FXD,CMPSN:160 OHM,5%,0.25W	01121	CB1615
R1268	315-0681-00			RES.,FXD,CMPSN:680 OHM,5%,0.25W	01121	CB6815
R1269	315-0104-00	B020000	B020614	RES.,FXD,CMPSN:100K OHM,5%,0.25W	01121	CB1045
R1269	315-0753-00	B020615		RES.,FXD,CMPSN:75K OHM,5%,0.25W	01121	CB7535
R1270	311-1894-00			RES.,VAR,NONWIR:5K OHM,10%,0.75W	02111	43P502T655
R1271	315-0102-00			RES.,FXD,CMPSN:1K OHM,5%,0.25W	01121	CB1025
R1272	315-0392-00			RES.,FXD,CMPSN:3.9K OHM,5%,0.25W	01121	CB3925
R1273	315-0511-00	B020000	B020614	RES.,FXD,CMPSN:510 OHM,5%,0.25W	01121	CB5115
R1273	315-0471-00	B020615		RES.,FXD,CMPSN:470 OHM,5%,0.25W	01121	CB4715
R1274	321-0318-00			RES.,FXD,FILM:20K OHM,1%,0.125W	91637	MFF1816G20001F
R1275	315-0511-00	B020000	B020614	RES.,FXD,CMPSN:510 OHM,5%,0.25W	01121	CB5115
R1275	315-0471-00	B020615		RES.,FXD,CMPSN:470 OHM,5%,0.25W	01121	CB4715
R1276	321-0816-00			RES.,FXD,FILM:5K OHM,1%,0.125W	24546	NA55D5001F
R1277	321-0113-00			RES.,FXD,FILM:147 OHM,1%,0.125W	91637	MFF1816G147R0F
R1278	315-0101-00			RES.,FXD,CMPSN:100 OHM,5%,0.25W	01121	CB1015
R1279	321-0187-00			RES.,FXD,FILM:866 OHM,1%,0.125W	91637	MFF1816G866R0F
R1301	315-0221-00			RES.,FXD,CMPSN:220 OHM,5%,0.25W	01121	CB2215
R1302	315-0272-00			RES.,FXD,CMPSN:2.7K OHM,5%,0.25W	01121	CB2725
R1303	315-0221-00			RES.,FXD,CMPSN:220 OHM,5%,0.25W	01121	CB2215
R1304	315-0472-00			RES.,FXD,CMPSN:4.7K OHM,5%,0.25W	01121	CB4725
R1306	315-0101-00			RES.,FXD,CMPSN:100 OHM,5%,0.25W	01121	CB1015
R1307	315-0221-00			RES.,FXD,CMPSN:220 OHM,5%,0.25W	01121	CB2215
R1308	315-0472-00			RES.,FXD,CMPSN:4.7K OHM,5%,0.25W	01121	CB4725
R1311	315-0221-00			RES.,FXD,CMPSN:220 OHM,5%,0.25W	01121	CB2215
R1312	315-0472-00			RES.,FXD,CMPSN:4.7K OHM,5%,0.25W	01121	CB4725
R1315	315-0221-00			RES.,FXD,CMPSN:220 OHM,5%,0.25W	01121	CB2215
R1316	315-0472-00			RES.,FXD,CMPSN:4.7K OHM,5%,0.25W	01121	CB4725
R1321	315-0511-00	XB090000		RES.,FXD,CMPSN:510 OHM,5%,0.25W	01121	CB5115
R1322	315-0102-00			RES.,FXD,CMPSN:1K OHM,5%,0.25W	01121	CB1025
R1323	315-0203-00	B020000	B049999	RES.,FXD,CMPSN:20K OHM,5%,0.25W	01121	CB2035
R1323	315-0103-00	B050000		RES.,FXD,CMPSN:10K OHM,5%,0.25W	01121	CB1035
R1328	315-0102-00			RES.,FXD,CMPSN:1K OHM,5%,0.25W	01121	CB1025
R1329	315-0223-00	XB050000	B089999	RES.,FXD,CMPSN:22K OHM,5%,0.25W	01121	CB2235

Ckt No.	Tektronix Part No.	Serial/Model No. Eff	Dscont	Name & Description	Mfr Code	Mfr Part Number
R1329	315-0393-00	B090000		RES.,FXD,CMPSN:39K OHM,5%,0.25W	01121	CB3935
R1331	315-0102-00	XB050000	B089999	RES.,FXD,CMPSN:1K OHM,5%,0.25W	01121	CB1025
R1331	315-0113-00	B090000		RES.,FXD,CMPSN:11K OHM,5%,0.25W	01121	CB1135
R1332	315-0102-00	B020000	B049999	RES.,FXD,CMPSN:1K OHM,5%,0.25W	01121	CB1025
R1332	315-0622-00	B050000		RES.,FXD,CMPSN:6.2K OHM,5%,0.25W	01121	CB6225
R1333	315-0302-00	B020000	B049999	RES.,FXD,CMPSN:3K OHM,5%,0.25W	01121	CB3025
R1333	315-0133-00	B050000		RES.,FXD,CMPSN:13K OHM,5%,0.25W	01121	CB1335
R1335	311-1238-00			RES.,VAR,NONWIR:5K OHM,10%,0.50W	73138	72-27-0
R1336	315-0133-00			RES.,FXD,CMPSN:13K OHM,5%,0.25W	01121	CB1335
R1339	315-0103-00	XB063430		RES.,FXD,CMPSN:10K OHM,5%,0.25W	01121	CB1035
R1340	315-0103-00	XB063430		RES.,FXD,CMPSN:10K OHM,5%,0.25W	01121	CB1035
R1341	315-0473-00			RES.,FXD,CMPSN:47K OHM,5%,0.25W	01121	CB4735
R1342	315-0473-00			RES.,FXD,CMPSN:47K OHM,5%,0.25W	01121	CB4735
R1343	315-0103-00			RES.,FXD,CMPSN:10K OHM,5%,0.25W	01121	CB1035
R1344	315-0103-00			RES.,FXD,CMPSN:10K OHM,5%,0.25W	01121	CB1035
R1345	315-0473-00			RES.,FXD,CMPSN:47K OHM,5%,0.25W	01121	CB4735
R1349	315-0103-00	XB063430		RES.,FXD,CMPSN:10K OHM,5%,0.25W	01121	CB1035
R1350	315-0103-00	XB063430		RES.,FXD,CMPSN:10K OHM,5%,0.25W	01121	CB1035
R1351	315-0473-00			RES.,FXD,CMPSN:47K OHM,5%,0.25W	01121	CB4735
R1352	315-0473-00			RES.,FXD,CMPSN:47K OHM,5%,0.25W	01121	CB4735
R1353	315-0103-00			RES.,FXD,CMPSN:10K OHM,5%,0.25W	01121	CB1035
R1354	315-0103-00			RES.,FXD,CMPSN:10K OHM,5%,0.25W	01121	CB1035
R1361	315-0102-00			RES.,FXD,CMPSN:1K OHM,5%,0.25W	01121	CB1025
R1363	315-0202-00			RES.,FXD,CMPSN:2K OHM,5%,0.25W	01121	CB2025
R1364	315-0104-00			RES.,FXD,CMPSN:100K OHM,5%,0.25W	01121	CB1045
R1370	315-0472-00			RES.,FXD,CMPSN:4.7K OHM,5%,0.25W	01121	CB4725
R1371	315-0272-00			RES.,FXD,CMPSN:2.7K OHM,5%,0.25W	01121	CB2725
R1372	315-0151-00			RES.,FXD,CMPSN:150 OHM,5%,0.25W	01121	CB1515
R1373	315-0562-00			RES.,FXD,CMPSN:5.6K OHM,5%,0.25W	01121	CB5625
R1374	315-0103-00			RES.,FXD,CMPSN:10K OHM,5%,0.25W	01121	CB1035
R1375	311-1245-00			RES.,VAR,NONWIR:10K OHM,10%,0.50W	73138	72-28-0
R1376	315-0302-00			RES.,FXD,CMPSN:3K OHM,5%,0.25W	01121	CB3025
R1381	321-0310-00			RES.,FXD,FILM:16.5K OHM,1%,0.125W	91637	MFF1816G16501F
R1382	321-0306-00			RES.,FXD,FILM:15K OHM,1%,0.125W	91637	MFF1816G15001F
R1383	315-0513-00			RES.,FXD,CMPSN:51K OHM,5%,0.25W	01121	CB5135
R1384	321-0315-00			RES.,FXD,FILM:18.7K OHM,1%,0.125W	91637	CMF55-116G18701F
R1385	321-0335-00			RES.,FXD,FILM:30.1K OHM,1%,0.125W	91637	MFF1816G30101F
R1386	321-0400-00			RES.,FXD,FILM:143K OHM,1%,0.125W	91637	MFF1816G14302F
R1391	315-0513-00			RES.,FXD,CMPSN:51K OHM,5%,0.25W	01121	CB5135
R1392	315-0154-00			RES.,FXD,CMPSN:150K OHM,5%,0.25W	01121	CB1545
R1393	321-0310-00			RES.,FXD,FILM:16.5K OHM,1%,0.125W	91637	MFF1816G16501F
R1394	315-0513-00			RES.,FXD,CMPSN:51K OHM,5%,0.25W	01121	CB5135
R1395	315-0154-00			RES.,FXD,CMPSN:150K OHM,5%,0.25W	01121	CB1545
R1396	315-0513-00			RES.,FXD,CMPSN:51K OHM,5%,0.25W	01121	CB5135
R1397	321-0310-00			RES.,FXD,FILM:16.5K OHM,1%,0.125W	91637	MFF1816G16501F
R1403	315-0103-00			RES.,FXD,CMPSN:10K OHM,5%,0.25W	01121	CB1035
R1404	315-0222-00			RES.,FXD,CMPSN:2.2K OHM,5%,0.25W	01121	CB2225
R1405	315-0362-00			RES.,FXD,CMPSN:3.6K OHM,5%,0.25W	01121	CB3625
R1406	315-0103-00			RES.,FXD,CMPSN:10K OHM,5%,0.25W	01121	CB1035
R1411	315-0101-00			RES.,FXD,CMPSN:100 OHM,5%,0.25W	01121	CB1015
R1412	315-0472-00			RES.,FXD,CMPSN:4.7K OHM,5%,0.25W	01121	CB4725
R1413	315-0221-00			RES.,FXD,CMPSN:220 OHM,5%,0.25W	01121	CB2215
R1414	315-0622-00			RES.,FXD,CMPSN:6.2K OHM,5%,0.25W	01121	CB6225
R1415	315-0153-00			RES.,FXD,CMPSN:15K OHM,5%,0.25W	01121	CB1535
R1416	315-0103-00			RES.,FXD,CMPSN:10K OHM,5%,0.25W	01121	CB1035
R1417	315-0682-00			RES.,FXD,CMPSN:6.8K OHM,5%,0.25W	01121	CB6825
R1418	315-0103-00	B020000	B020294	RES.,FXD,CMPSN:10K OHM,5%,0.25W	01121	CB1035

Ckt No.	Tektronix Part No.	Serial/Model No. Eff	Dscont	Name & Description	Mfr Code	Mfr Part Number
R1418	315-0511-00	B020295		RES.,FXD,CMPSN:510 OHM,5%,0.25W	01121	CB5115
R1419	315-0101-00			RES.,FXD,CMPSN:100 OHM,5%,0.25W	01121	CB1015
R1421	315-0103-00			RES.,FXD,CMPSN:10K OHM,5%,0.25W	01121	CB1035
R1422	315-0134-00			RES.,FXD,CMPSN:130K OHM,5%,0.25W	01121	CB1345
R1423	321-0400-00			RES.,FXD,FILM:143K OHM,1%,0.125W	91637	MFF1816G14302F
R1424	315-0101-00			RES.,FXD,CMPSN:100 OHM,5%,0.25W	01121	CB1015
R1425	315-0103-00			RES.,FXD,CMPSN:10K OHM,5%,0.25W	01121	CB1035
R1426	315-0134-00			RES.,FXD,CMPSN:130K OHM,5%,0.25W	01121	CB1345
R1427	321-0400-00			RES.,FXD,FILM:143K OHM,1%,0.125W	91637	MFF1816G14302F
R1429	315-0103-00			RES.,FXD,CMPSN:10K OHM,5%,0.25W	01121	CB1035
R1430	315-0134-00			RES.,FXD,CMPSN:130K OHM,5%,0.25W	01121	CB1345
R1431	321-0400-00			RES.,FXD,FILM:143K OHM,1%,0.125W	91637	MFF1816G14302F
R1433	315-0103-00			RES.,FXD,CMPSN:10K OHM,5%,0.25W	01121	CB1035
R1434	315-0134-00			RES.,FXD,CMPSN:130K OHM,5%,0.25W	01121	CB1345
R1435	321-0400-00			RES.,FXD,FILM:143K OHM,1%,0.125W	91637	MFF1816G14302F
R1436	315-0204-00			RES.,FXD,CMPSN:200K OHM,5%,0.25W	01121	CB2045
R1437	315-0103-00			RES.,FXD,CMPSN:10K OHM,5%,0.25W	01121	CB1035
R1438	315-0134-00			RES.,FXD,CMPSN:130K OHM,5%,0.25W	01121	CB1345
R1439	321-0400-00			RES.,FXD,FILM:143K OHM,1%,0.125W	91637	MFF1816G14302F
R1440	315-0101-00			RES.,FXD,CMPSN:100 OHM,5%,0.25W	01121	CB1015
R1441	315-0103-00			RES.,FXD,CMPSN:10K OHM,5%,0.25W	01121	CB1035
R1442	315-0134-00			RES.,FXD,CMPSN:130K OHM,5%,0.25W	01121	CB1345
R1443	321-0400-00			RES.,FXD,FILM:143K OHM,1%,0.125W	91637	MFF1816G14302F
R1445	315-0103-00			RES.,FXD,CMPSN:10K OHM,5%,0.25W	01121	CB1035
R1446	315-0134-00			RES.,FXD,CMPSN:130K OHM,5%,0.25W	01121	CB1345
R1447	321-0400-00			RES.,FXD,FILM:143K OHM,1%,0.125W	91637	MFF1816G14302F
R1449	315-0103-00			RES.,FXD,CMPSN:10K OHM,5%,0.25W	01121	CB1035
R1450	315-0134-00			RES.,FXD,CMPSN:130K OHM,5%,0.25W	01121	CB1345
R1451	321-0400-00			RES.,FXD,FILM:143K OHM,1%,0.125W	91637	MFF1816G14302F
R1452	315-0204-00			RES.,FXD,CMPSN:200K OHM,5%,0.25W	01121	CB2045
R1453	315-0103-00			RES.,FXD,CMPSN:10K OHM,5%,0.25W	01121	CB1035
R1454	315-0134-00			RES.,FXD,CMPSN:130K OHM,5%,0.25W	01121	CB1345
R1455	321-0400-00			RES.,FXD,FILM:143K OHM,1%,0.125W	91637	MFF1816G14302F
R1456	315-0101-00			RES.,FXD,CMPSN:100 OHM,5%,0.25W	01121	CB1015
R1457	315-0103-00			RES.,FXD,CMPSN:10K OHM,5%,0.25W	01121	CB1035
R1458	315-0134-00			RES.,FXD,CMPSN:130K OHM,5%,0.25W	01121	CB1345
R1459	321-0400-00			RES.,FXD,FILM:143K OHM,1%,0.125W	91637	MFF1816G14302F
R1461	315-0103-00			RES.,FXD,CMPSN:10K OHM,5%,0.25W	01121	CB1035
R1462	315-0134-00			RES.,FXD,CMPSN:130K OHM,5%,0.25W	01121	CB1345
R1463	321-0400-00			RES.,FXD,FILM:143K OHM,1%,0.125W	91637	MFF1816G14302F
R1465	315-0103-00			RES.,FXD,CMPSN:10K OHM,5%,0.25W	01121	CB1035
R1466	315-0134-00			RES.,FXD,CMPSN:130K OHM,5%,0.25W	01121	CB1345
R1467	321-0400-00			RES.,FXD,FILM:143K OHM,1%,0.125W	91637	MFF1816G14302F
R1469	315-0103-00			RES.,FXD,CMPSN:10K OHM,5%,0.25W	01121	CB1035
R1470	315-0134-00			RES.,FXD,CMPSN:130K OHM,5%,0.25W	01121	CB1345
R1471	321-0400-00			RES.,FXD,FILM:143K OHM,1%,0.125W	91637	MFF1816G14302F
R1473	315-0103-00			RES.,FXD,CMPSN:10K OHM,5%,0.25W	01121	CB1035
R1474	315-0134-00			RES.,FXD,CMPSN:130K OHM,5%,0.25W	01121	CB1345
R1475	321-0400-00			RES.,FXD,FILM:143K OHM,1%,0.125W	91637	MFF1816G14302F
R1477	315-0103-00			RES.,FXD,CMPSN:10K OHM,5%,0.25W	01121	CB1035
R1478	315-0134-00			RES.,FXD,CMPSN:130K OHM,5%,0.25W	01121	CB1345
R1479	321-0400-00			RES.,FXD,FILM:143K OHM,1%,0.125W	91637	MFF1816G14302F
R1481	315-0103-00			RES.,FXD,CMPSN:10K OHM,5%,0.25W	01121	CB1035
R1482	315-0134-00			RES.,FXD,CMPSN:130K OHM,5%,0.25W	01121	CB1345
R1483	321-0400-00			RES.,FXD,FILM:143K OHM,1%,0.125W	91637	MFF1816G14302F
R1484	315-0204-00			RES.,FXD,CMPSN:200K OHM,5%,0.25W	01121	CB2045
R1485	315-0163-00			RES.,FXD,CMPSN:16K OHM,5%,0.25W	01121	CB1635

Ckt No.	Tektronix Part No.	Serial/Model No. Eff	Dscont	Name & Description	Mfr Code	Mfr Part Number
R1486	315-0102-00			RES.,FXD,CMPSN:1K OHM,5%,0.25W	01121	CB1025
R1487	315-0103-00			RES.,FXD,CMPSN:10K OHM,5%,0.25W	01121	CB1035
R1488	315-0101-00			RES.,FXD,CMPSN:100 OHM,5%,0.25W	01121	CB1015
R1490	321-0310-00			RES.,FXD,FILM:16.5K OHM,1%,0.125W	91637	MFF1816G16501F
R1491	315-0104-00			RES.,FXD,CMPSN:100K OHM,5%,0.25W	01121	CB1045
R1493	315-0104-00			RES.,FXD,CMPSN:100K OHM,5%,0.25W	01121	CB1045
R1494	321-0310-00			RES.,FXD,FILM:16.5K OHM,1%,0.125W	91637	MFF1816G16501F
R1495	321-0310-00			RES.,FXD,FILM:16.5K OHM,1%,0.125W	91637	MFF1816G16501F
R1496	315-0102-00			RES.,FXD,CMPSN:1K OHM,5%,0.25W	01121	CB1025
R1497	315-0123-00			RES.,FXD,CMPSN:12K OHM,5%,0.25W	01121	CB1235
R1498	315-0103-00			RES.,FXD,CMPSN:10K OHM,5%,0.25W	01121	CB1035
R1499	315-0103-00			RES.,FXD,CMPSN:10K OHM,5%,0.25W	01121	CB1035
R1505	315-0101-00	XB080000		RES.,FXD,CMPSN:100 OHM,5%,0.25W	01121	CB1015
R1506	315-0101-00	XB080000		RES.,FXD,CMPSN:100 OHM,5%,0.25W	01121	CB1015
R1509	315-0471-00	XB080000		RES.,FXD,CMPSN:470 OHM,5%,0.25W	01121	CB4715
R1511	315-0471-00	XB080000		RES.,FXD,CMPSN:470 OHM,5%,0.25W	01121	CB4715
RT691	307-0124-00			RES.,THERMAL:5K OHM,10%	50157	1D1618
RT782	307-0127-00			RES.,THERMAL:1K OHM,10%	50157	2D1596
S605	311-1883-00			RES.,VAR,NONWIR:10K OHM,1W	01121	14M870
S606	311-1883-00			RES.,VAR,NONWIR:10K OHM,1W	01121	14M870
S614	260-0735-00			SWITCH,PUSH:T,NO CONTACT,RED BUTTON	81073	39-1
S1200	260-1809-00			SWITCH,TOGGLE:SPTT,0.4A,20V	09353	7103SYCB8E
S1201	260-1809-00			SWITCH,TOGGLE:SPTT,0.4A,20V	09353	7103SYCB8E
S1202	260-1809-00			SWITCH,TOGGLE:SPTT,0.4A,20V	09353	7103SYCB8E
S1203	260-1809-00			SWITCH,TOGGLE:SPTT,0.4A,20V	09353	7103SYCB8E
S1204	260-1809-00			SWITCH,TOGGLE:SPTT,0.4A,20V	09353	7103SYCB8E
S1205	260-1809-00			SWITCH,TOGGLE:SPTT,0.4A,20V	09353	7103SYCB8E
S1206	260-1809-00			SWITCH,TOGGLE:SPTT,0.4A,20V	09353	7103SYCB8E
S1207	260-1809-00			SWITCH,TOGGLE:SPTT,0.4A,20V	09353	7103SYCB8E
S1208	260-1809-00			SWITCH,TOGGLE:SPTT,0.4A,20V	09353	7103SYCB8E
S1209	260-1809-00			SWITCH,TOGGLE:SPTT,0.4A,20V	09353	7103SYCB8E
S1210	260-1809-00			SWITCH,TOGGLE:SPTT,0.4A,20V	09353	7103SYCB8E
S1211	260-1809-00			SWITCH,TOGGLE:SPTT,0.4A,20V	09353	7103SYCB8E
S1212	260-1809-00			SWITCH,TOGGLE:SPTT,0.4A,20V	09353	7103SYCB8E
S1213	260-1809-00			SWITCH,TOGGLE:SPTT,0.4A,20V	09353	7103SYCB8E
S1214	260-1809-00			SWITCH,TOGGLE:SPTT,0.4A,20V	09353	7103SYCB8E
S1215	260-1809-00			SWITCH,TOGGLE:SPTT,0.4A,20V	09353	7103SYCB8E
S1218	260-1809-00			SWITCH,TOGGLE:SPTT,0.4A,20V	09353	7103SYCB8E
S1219	260-1809-00			SWITCH,TOGGLE:SPTT,0.4A,20V	09353	7103SYCB8E
S1220	260-1809-00			SWITCH,TOGGLE:SPTT,0.4A,20V	09353	7103SYCB8E
S1251	260-1335-00			SWITCH,TOGGLE:SPDT,0.4A,20VDC	09353	7101 SHCB8E
S1256	260-1809-00			SWITCH,TOGGLE:SPTT,0.4A,20V	09353	7103SYCB8E
S1258	260-1335-00			SWITCH,TOGGLE:SPDT,0.4A,20VDC	09353	7101 SHCB8E
S1260	260-1335-00			SWITCH,TOGGLE:SPDT,0.4A,20VDC	09353	7101 SHCB8E
S1265	260-1809-00			SWITCH,TOGGLE:SPTT,0.4A,20V	09353	7103SYCB8E
S1275	260-1871-00			SWITCH,TOGGLE:DPDT,5A,120VAC	09353	7211SYCB
S1342	263-0028-00			SWITCH,ROTARY:MINI PANCAKE,CURSOR	80009	263-0028-00
S1352	263-0028-00			SWITCH,ROTARY:MINI PANCAKE,CURSOR	80009	263-0028-00
S1493	260-1335-00	B020000	B079999X	SWITCH,TOGGLE:SPDT,0.4A,20VDC	09353	7101 SHCB8E
S1501	260-1809-00	XB080000		SWITCH,TOGGLE:SPTT,0.4A,20V	09353	7103SYCB8E
T922	120-1062-00			TRANSFORMER,RF:BASE DRIVE POT CORE	80009	120-1062-00
T942	120-1083-00			XFMR,PWR,SDN,RF:POT CORE	80009	120-1083-00
U106	156-0307-00	B020000	B100265	MICROCIRCUIT,LI:QUAD DIFF LINE RECEIVER	80009	156-0307-00
U106	156-0307-01	B100266		MICROCIRCUIT,DI:QUAD DIFF LINE RECEIVER	80009	156-0307-01
U108	156-0757-00	B020000	B100265	MICROCIRCUIT,DI:DUAL 3-IN,3-OUT GATE	04713	MC10211(P OR L)

Ckt No.	Tektronix Part No.	Serial/Model No. Eff	Dscont	Name & Description	Mfr Code	Mfr Part Number
U108	156-0757-01	B100266		MICROCIRCUIT,DI:DUAL 3-IN,3-OUT OR NOR	80009	156-0757-01
U110	156-0757-00	B020000	B100265	MICROCIRCUIT,DI:DUAL 3-IN,3-OUT GATE	04713	MC10211(P OR L)
U110	156-0757-01	B100266		MICROCIRCUIT,DI:DUAL 3-IN,3-OUT OR NOR	80009	156-0757-01
U120	156-0638-00	B020000	B100265	MICROCIRCUIT,DI:FOUR-BIT UNIV SHIFT RGTR	04713	MC10141L
U120	156-0638-01	B100266		MICROCIRCUIT,DI:FOUR-BIT UNIVSHIFT RGTR	04713	MC10141
U130	156-0638-00	B020000	B100265	MICROCIRCUIT,DI:FOUR-BIT UNIV SHIFT RGTR	04713	MC10141L
U130	156-0638-01	B100266		MICROCIRCUIT,DI:FOUR-BIT UNIVSHIFT RGTR	04713	MC10141
U132	156-0205-00	B020000	B100265	MICROCIRCUIT,DI:QUAD 2-INPUT NOR GATE	04713	MC10102 (P OR L)
U132	156-0205-02	B100266		MICROCIRCUIT,DI:QUAD 2-INP NOR GATE,SCRN	04713	SC22689L102
U136	156-0687-00	B020000	B100265	MICROCIRCUIT,DI:QUAD EXCLUSIVE-OR COMP	80009	156-0687-00
U136	156-0687-01	B100266		MICROCIRCUIT,DI:QUAD EXCL OR CMPTR	04713	MC10113PI
U140	156-0641-00	B020000	B100265	MICROCIRCUIT,DI:UNIVERSAL,HEXIDECIMAL CNTR	80009	156-0641-00
U140	156-0641-01	B100266		MICROCIRCUIT,DI:UNIV HEX CNTR,SCRN	80009	156-0641-01
U150	156-0641-00	B020000	B100265	MICROCIRCUIT,DI:UNIVERSAL,HEXIDECIMAL CNTR	80009	156-0641-00
U150	156-0641-01	B100266		MICROCIRCUIT,DI:UNIV HEX CNTR,SCRN	80009	156-0641-01
U225	156-0632-00	B020000	B100265	MICROCIRCUIT,DI:QUAD 2 INPUT MUX/LATCH	04713	MC10173L
U225	156-0632-02	B100266		MICROCIRCUIT,DI:QUAD 2 INPUT MUX/LATCH	80009	156-0632-02
U235	156-0638-00	B020000	B100265	MICROCIRCUIT,DI:FOUR-BIT UNIV SHIFT RGTR	04713	MC10141L
U235	156-0638-01	B100266		MICROCIRCUIT,DI:FOUR-BIT UNIVSHIFT RGTR	04713	MC10141
U245	156-0638-00	B020000	B100265	MICROCIRCUIT,DI:FOUR-BIT UNIV SHIFT RGTR	04713	MC10141L
U245	156-0638-01	B100266		MICROCIRCUIT,DI:FOUR-BIT UNIVSHIFT RGTR	04713	MC10141
U252	156-0657-00	B020000	B100265	MICROCIRCUIT,DI:256 BIT RAM	04713	MCM10144L
U252	156-0657-02	B100266		MICROCIRCUIT,DI:256 X 1 STATIC RAM	04713	MCM10144L
U254	156-0657-00	B020000	B100265	MICROCIRCUIT,DI:256 BIT RAM	04713	MCM10144L
U254	156-0657-02	B100266		MICROCIRCUIT,DI:256 X 1 STATIC RAM	04713	MCM10144L
U256	156-0657-00	B020000	B100265	MICROCIRCUIT,DI:256 BIT RAM	04713	MCM10144L
U256	156-0657-02	B100266		MICROCIRCUIT,DI:256 X 1 STATIC RAM	04713	MCM10144L
U258	156-0657-00	B020000	B100265	MICROCIRCUIT,DI:256 BIT RAM	04713	MCM10144L
U258	156-0657-02	B100266		MICROCIRCUIT,DI:256 X 1 STATIC RAM	04713	MCM10144L
U260	156-0458-00	B020000	B100265	MICROCIRCUIT,DI:QUAD AND GATE,2-INP	04713	MC10104L
U260	156-0458-01	B100266		MICROCIRCUIT,DI:QUAD AND GATE2 INP,SCRN	04713	SC22689P104
U268	156-0230-00	B020000	B100265	MICROCIRCUIT,DI:DUAL D MA-SLAVE FLIP-FLOP	04713	MC10131 (L OR P)
U268	156-0230-02	B100266		MICROCIRCUIT,DI:DUAL D-TYPE M/S,FF,SCRN	80009	156-0230-02
U269	156-0182-00	B020000	B100265	MICROCIRCUIT,DI:TRIPLE 2-3-2 INPUT GATE	80009	156-0182-00
U269	156-0182-02	B100266		MICROCIRCUIT,DI:TRIPLE 2-3-2 INPUT GATE	80009	156-0182-02
U335	156-0638-00	B020000	B100265	MICROCIRCUIT,DI:FOUR-BIT UNIV SHIFT RGTR	04713	MC10141L
U335	156-0638-01	B100266		MICROCIRCUIT,DI:FOUR-BIT UNIVSHIFT RGTR	04713	MC10141
U345	156-0638-00	B020000	B100265	MICROCIRCUIT,DI:FOUR-BIT UNIV SHIFT RGTR	04713	MC10141L
U345	156-0638-01	B100266		MICROCIRCUIT,DI:FOUR-BIT UNIVSHIFT RGTR	04713	MC10141
U352	156-0657-00	B020000	B100265	MICROCIRCUIT,DI:256 BIT RAM	04713	MCM10144L
U352	156-0657-02	B100266		MICROCIRCUIT,DI:256 X 1 STATIC RAM	04713	MCM10144L
U354	156-0657-00	B020000	B100265	MICROCIRCUIT,DI:256 BIT RAM	04713	MCM10144L
U354	156-0657-02	B100266		MICROCIRCUIT,DI:256 X 1 STATIC RAM	04713	MCM10144L
U356	156-0657-00	B020000	B100265	MICROCIRCUIT,DI:256 BIT RAM	04713	MCM10144L
U356	156-0657-02	B100266		MICROCIRCUIT,DI:256 X 1 STATIC RAM	04713	MCM10144L
U358	156-0657-00	B020000	B100265	MICROCIRCUIT,DI:256 BIT RAM	04713	MCM10144L
U358	156-0657-02	B100266		MICROCIRCUIT,DI:256 X 1 STATIC RAM	04713	MCM10144L
U425	156-0632-00	B020000	B100265	MICROCIRCUIT,DI:QUAD 2 INPUT MUX/LATCH	04713	MC10173L
U425	156-0632-02	B100266		MICROCIRCUIT,DI:QUAD 2 INPUT MUX/LATCH	80009	156-0632-02
U435	156-0638-00	B020000	B100265	MICROCIRCUIT,DI:FOUR-BIT UNIV SHIFT RGTR	04713	MC10141L
U435	156-0638-01	B100266		MICROCIRCUIT,DI:FOUR-BIT UNIVSHIFT RGTR	04713	MC10141
U445	156-0638-00	B020000	B100265	MICROCIRCUIT,DI:FOUR-BIT UNIV SHIFT RGTR	04713	MC10141L
U445	156-0638-01	B100266		MICROCIRCUIT,DI:FOUR-BIT UNIVSHIFT RGTR	04713	MC10141
U452	156-0657-00	B020000	B100265	MICROCIRCUIT,DI:256 BIT RAM	04713	MCM10144L
U452	156-0657-02	B100266		MICROCIRCUIT,DI:256 X 1 STATIC RAM	04713	MCM10144L
U454	156-0657-00	B020000	B100265	MICROCIRCUIT,DI:256 BIT RAM	04713	MCM10144L

Ckt No.	Tektronix Part No.	Serial/Model No. Eff	Dscont	Name & Description	Mfr Code	Mfr Part Number
U454	156-0657-02	B100266		MICROCIRCUIT,DI:256 X 1 STATIC RAM	04713	MCM10144L
U456	156-0657-00	B020000	B100265	MICROCIRCUIT,DI:256 BIT RAM	04713	MCM10144L
U456	156-0657-02	B100266		MICROCIRCUIT,DI:256 X 1 STATIC RAM	04713	MCM10144L
U458	156-0657-00	B020000	B100265	MICROCIRCUIT,DI:256 BIT RAM	04713	MCM10144L
U458	156-0657-02	B100266		MICROCIRCUIT,DI:256 X 1 STATIC RAM	04713	MCM10144L
U460	156-0458-00	B020000	B100265	MICROCIRCUIT,DI:QUAD AND GATE,2-INP	04713	MC10104L
U460	156-0458-01	B100266		MICROCIRCUIT,DI:QUAD AND GATE2 INP,SCRN	04713	SC22689P104
U535	156-0638-00	B020000	B100265	MICROCIRCUIT,DI:FOUR-BIT UNIV SHIFT RGTR	04713	MC10141L
U535	156-0638-01	B100266		MICROCIRCUIT,DI:FOUR-BIT UNIVSHIFT RGTR	04713	MC10141
U545	156-0638-00	B020000	B100265	MICROCIRCUIT,DI:FOUR-BIT UNIV SHIFT RGTR	04713	MC10141L
U545	156-0638-01	B100266		MICROCIRCUIT,DI:FOUR-BIT UNIVSHIFT RGTR	04713	MC10141
U552	156-0657-00	B020000	B100265	MICROCIRCUIT,DI:256 BIT RAM	04713	MCM10144L
U552	156-0657-02	B100266		MICROCIRCUIT,DI:256 X 1 STATIC RAM	04713	MCM10144L
U554	156-0657-00	B020000	B100265	MICROCIRCUIT,DI:256 BIT RAM	04713	MCM10144L
U554	156-0657-02	B100266		MICROCIRCUIT,DI:256 X 1 STATIC RAM	04713	MCM10144L
U556	156-0657-00	B020000	B100265	MICROCIRCUIT,DI:256 BIT RAM	04713	MCM10144L
U556	156-0657-02	B100266		MICROCIRCUIT,DI:256 X 1 STATIC RAM	04713	MCM10144L
U558	156-0657-00	B020000	B100265	MICROCIRCUIT,DI:256 BIT RAM	04713	MCM10144L
U558	156-0657-02	B100266		MICROCIRCUIT,DI:256 X 1 STATIC RAM	04713	MCM10144L
U560	156-0458-00	B020000	B100265	MICROCIRCUIT,DI:QUAD AND GATE,2-INP	04713	MC10104L
U560	156-0458-01	B100266		MICROCIRCUIT,DI:QUAD AND GATE2 INP,SCRN	04713	SC22689P104
U570	156-0640-00	B020000	B100265	MICROCIRCUIT,DI:8 LINE MULTIPLEXER	80009	156-0640-00
U570	156-0640-02	B100266		MICROCIRCUIT,DI:8 LINE MULTIPLEXER	80009	156-0640-02
U572	156-0640-00	B020000	B100265	MICROCIRCUIT,DI:8 LINE MULTIPLEXER	80009	156-0640-00
U572	156-0640-02	B100266		MICROCIRCUIT,DI:8 LINE MULTIPLEXER	80009	156-0640-02
U608	156-0205-00	B020000	B099999	MICROCIRCUIT,DI:QUAD 2-INPUT NOR GATE	04713	MC10102 (P OR L)
U608	156-0205-02	B100000		MICROCIRCUIT,DI:QUAD 2-INP NOR GATE,SCRN	04713	SC22689L102
U610	156-0295-00	B020000	B099999	MICROCIRCUIT,DI:TRIPLE EXCL OR EXCL NOR	80009	156-0295-00
U610	156-0295-02	B100000		MICROCIRCUIT,DI:TRIPLE 2-INP EXCL OR NOR	80009	156-0295-02
U615	156-0230-00	B020000	B099999	MICROCIRCUIT,DI:DUAL D MA-SLAVE FLIP-FLOP	04713	MC10131 (L OR P)
U615	156-0230-02	B100000		MICROCIRCUIT,DI:DUAL D-TYPE M/S,FF,SCRN	80009	156-0230-02
U617	156-0182-00	B020000	B099999	MICROCIRCUIT,DI:TRIPLE 2-3-2 INPUT GATE	80009	156-0182-00
U617	156-0182-02	B100000		MICROCIRCUIT,DI:TRIPLE 2-3-2 INPUT GATE	80009	156-0182-02
U619	156-0230-00	B020000	B099999	MICROCIRCUIT,DI:DUAL D MA-SLAVE FLIP-FLOP	04713	MC10131 (L OR P)
U619	156-0230-02	B100000		MICROCIRCUIT,DI:DUAL D-TYPE M/S,FF,SCRN	80009	156-0230-02
U621	156-0230-00	B020000	B099999	MICROCIRCUIT,DI:DUAL D MA-SLAVE FLIP-FLOP	04713	MC10131 (L OR P)
U621	156-0230-02	B100000		MICROCIRCUIT,DI:DUAL D-TYPE M/S,FF,SCRN	80009	156-0230-02
U622	156-0638-00	B020000	B099999	MICROCIRCUIT,DI:FOUR-BIT UNIV SHIFT RGTR	04713	MC10141L
U622	156-0638-01	B100000		MICROCIRCUIT,DI:FOUR-BIT UNIVSHIFT RGTR	04713	MC10141
U623	156-0641-00	B020000	B099999	MICROCIRCUIT,DI:UNIVERSAL,HEXIDECIMAL CNTR	80009	156-0641-00
U623	156-0641-01	B100000		MICROCIRCUIT,DI:UNIV HEX CNTR,SCRN	80009	156-0641-01
U624	156-0641-00	B020000	B099999	MICROCIRCUIT,DI:UNIVERSAL,HEXIDECIMAL CNTR	80009	156-0641-00
U624	156-0641-01	B100000		MICROCIRCUIT,DI:UNIV HEX CNTR,SCRN	80009	156-0641-01
U625	156-0687-00	B020000	B099999	MICROCIRCUIT,DI:QUAD EXCLUSIVE-OR COMP	80009	156-0687-00
U625	156-0687-01	B100000		MICROCIRCUIT,DI:QUAD EXCL OR CMPTR	04713	MC10113PI
U628	156-0641-00	B020000	B099999	MICROCIRCUIT,DI:UNIVERSAL,HEXIDECIMAL CNTR	80009	156-0641-00
U628	156-0641-01	B100000		MICROCIRCUIT,DI:UNIV HEX CNTR,SCRN	80009	156-0641-01
U632	156-0205-00	B020000	B099999	MICROCIRCUIT,DI:QUAD 2-INPUT NOR GATE	04713	MC10102 (P OR L)
U632	156-0205-02	B100000		MICROCIRCUIT,DI:QUAD 2-INP NOR GATE,SCRN	04713	SC22689L102
U740	156-0688-00	B020000	B099999	MICROCIRCUIT,DI:DUAL J-K MASTER SLAVE FF	04713	MC10135L
U740	156-0688-01	B100000		MICROCIRCUIT,DI:DUAL J-K MASTER SLAVE FF	04713	SC22689L135
U752	156-0200-00	B020000	B099999	MICROCIRCUIT,LI:OPERATIONAL AMPLIFIER	04713	MC1456P1
U752	156-0200-02	B100000		MICROCIRCUIT,LI:OPERATIONAL AMPLIFIER	04713	MC1456U
U800	156-0205-00	B020000	B099999	MICROCIRCUIT,DI:QUAD 2-INPUT NOR GATE	04713	MC10102 (P OR L)
U800	156-0205-02	B100000		MICROCIRCUIT,DI:QUAD 2-INP NOR GATE,SCRN	04713	SC22689L102
U810	156-0642-00	B020000	B099999	MICROCIRCUIT,DI:BI-QUINARY CNTR	04713	MC10138L
U810	156-0642-01	B100000		MICROCIRCUIT,DI:BI QUINARY CNTR,SCRN	80009	156-0642-01

Ckt No.	Tektronix Part No.	Serial/Model No. Eff	Dscont	Name & Description	Mfr Code	Mfr Part Number
U812	156-0642-00	B020000	B099999	MICROCIRCUIT,DI:BI-QUINARY CNTR	04713	MC10138L
U812	156-0642-01	B100000		MICROCIRCUIT,DI:BI QUINARY CNTR,SCRN	80009	156-0642-01
U814	156-0642-00	B020000	B099999	MICROCIRCUIT,DI:BI-QUINARY CNTR	04713	MC10138L
U814	156-0642-01	B100000		MICROCIRCUIT,DI:BI QUINARY CNTR,SCRN	80009	156-0642-01
U816	156-0642-00	B020000	B099999	MICROCIRCUIT,DI:BI-QUINARY CNTR	04713	MC10138L
U816	156-0642-01	B100000		MICROCIRCUIT,DI:BI QUINARY CNTR,SCRN	80009	156-0642-01
U818	156-0642-00	B020000	B099999	MICROCIRCUIT,DI:BI-QUINARY CNTR	04713	MC10138L
U818	156-0642-01	B100000		MICROCIRCUIT,DI:BI QUINARY CNTR,SCRN	80009	156-0642-01
U820	156-0640-00	B020000	B099999	MICROCIRCUIT,DI:8 LINE MULTIPLEXER	80009	156-0640-00
U820	156-0640-01	B100000		MICROCIRCUIT,DI:8 LINE MULTIPLEXER	80009	156-0640-01
U824	156-0637-00	B020000	B099999	MICROCIRCUIT,DI:DUAL 4 TO 1 MULTIPLEXER	04713	MC10174P
U824	156-0637-01	B100000		MICROCIRCUIT,DI:DUAL 4 TO 1 MUX	80009	156-0637-01
U828	156-0642-00	B020000	B099999	MICROCIRCUIT,DI:BI-QUINARY CNTR	04713	MC10138L
U828	156-0642-01	B100000		MICROCIRCUIT,DI:BI QUINARY CNTR,SCRN	80009	156-0642-01
U838	156-0637-00	B020000	B099999	MICROCIRCUIT,DI:DUAL 4 TO 1 MULTIPLEXER	04713	MC10174P
U838	156-0637-01	B100000		MICROCIRCUIT,DI:DUAL 4 TO 1 MUX	80009	156-0637-01
U912	156-0402-00	XB080000	B099999	MICROCIRCUIT,LI:TIMER	27014	LM555CN
U912	156-0402-03	B100000		MICROCIRCUIT,LI:TIMER,TESTED	80009	156-0402-03
U918	156-0402-00	B020000	B099999	MICROCIRCUIT,LI:TIMER	27014	LM555CN
U918	156-0402-03	B100000		MICROCIRCUIT,LI:TIMER,TESTED	80009	156-0402-03
U1215	156-0369-00	B020000	B100219	MICROCIRCUIT,DI:TRIPLE LINE RECEIVER	80009	156-0369-00
U1215	156-0369-03	B100220		MICROCIRCUIT,DI:TRIPLE LINE RECEIVER,SCRN	04713	SC22689P216
U1218	156-0369-00	B020000	B100219	MICROCIRCUIT,DI:TRIPLE LINE RECEIVER	80009	156-0369-00
U1218	156-0369-03	B100220		MICROCIRCUIT,DI:TRIPLE LINE RECEIVER,SCRN	04713	SC22689P216
U1224	156-0369-00	B020000	B100219	MICROCIRCUIT,DI:TRIPLE LINE RECEIVER	80009	156-0369-00
U1224	156-0369-03	B100220		MICROCIRCUIT,DI:TRIPLE LINE RECEIVER,SCRN	04713	SC22689P216
U1234	156-0369-00	B020000	B100219	MICROCIRCUIT,DI:TRIPLE LINE RECEIVER	80009	156-0369-00
U1234	156-0369-03	B100220		MICROCIRCUIT,DI:TRIPLE LINE RECEIVER,SCRN	04713	SC22689P216
U1236	156-0369-00	B020000	B100219	MICROCIRCUIT,DI:TRIPLE LINE RECEIVER	80009	156-0369-00
U2136	156-0369-03	B100220		MICROCIRCUIT,DI:TRIPLE LINE RECEIVER,SCRN	04713	SC22689P216
U1248	156-0369-00	B020000	B100219	MICROCIRCUIT,DI:TRIPLE LINE RECEIVER	80009	156-0369-00
U1248	156-0369-03	B100220		MICROCIRCUIT,DI:TRIPLE LINE RECEIVER,SCRN	04713	SC22689P216
U1252	156-0229-00	B020000	B100219	MICROCIRCUIT,DI:DUAL 4-5 IN OR/NOR	80009	156-0229-00
U1252	156-0229-01	B100220		MICROCIRCUIT,DI:DUAL 4/5 INP OR NOR GATE	80009	156-0229-01
U1254	156-0229-00	B020000	B100219	MICROCIRCUIT,DI:DUAL 4-5 IN OR/NOR	80009	156-0229-00
U1254	156-0229-01	B100220		MICROCIRCUIT,DI:DUAL 4/5 INP OR NOR GATE	80009	156-0229-01
U1262	156-0458-00	B020000	B100219	MICROCIRCUIT,DI:QUAD AND GATE,2-INP	04713	MC10104L
U1262	156-0458-01	B100220		MICROCIRCUIT,DI:QUAD AND GATE2 INP,SCRN	04713	SC22689P104
U1276	156-0067-00	B020000	B100219	MICROCIRCUIT,LI:OPERATIONAL AMPLIFIER	01295	MICROA741CP
U1276	156-0067-12	B100220		MICROCIRCUIT,LI:OPERATIONAL AMPLIFIER	01295	UA741CJG
U1322	156-0381-00	B020000	B100243	MICROCIRCUIT,DI:QUAD 2-INPUT EXCL OR GATES	80009	156-0381-00
U1322	156-0381-02	B100244		MICROCIRCUIT,DI:QUAD 2-INP EXCL OR GATE	01295	SN74LS86
U1328	156-0331-00	B020000	B059999	MICROCIRCUIT,DI:DUAL D-TYPE,FLIP-FLOP	80009	156-0331-00
U1328	156-0388-00	B060000	B100243	MICROCIRCUIT,DI:DUAL D-TYPE FLIP-FLOP	80009	156-0388-00
U1328	156-0388-03	B100244		MICROCIRCUIT,DI:DUAL D FLIP-FLOP	07263	74LS74A
U1332	156-0382-00	B020000	B100243	MICROCIRCUIT,DI:QUAD 2-INPUT NAND GATE	01295	SN74LS00(N OR J)
U1332	156-0382-02	B100244		MICROCIRCUIT,DI:QUAD 2-INP NAND GATE	01295	SN74LS00
U1334	156-0383-00	B020000	B100243	MICROCIRCUIT,DI:QUAD 2-INPUT NOR GATE	80009	156-0383-00
U1334	156-0383-02	B100244		MICROCIRCUIT,DI:QUAD 2-INP NOR GATE	01295	SN74LS02
U1338	155-0090-00	B020000	B052814	MICROCIRCUIT,DI:MONOLITHIC,4 DECADE COUNTER	80009	155-0090-00
U1338	155-0171-00	B052815		MICROCIRCUIT,DI:4 DECADE COUNTER	80009	155-0171-00
U1342	156-0350-00	B020000	B100243	MICROCIRCUIT,DI:QUAD 2-INPUT NAND GATE	80009	156-0350-00
U1342	156-0350-05	B100244		MICROCIRCUIT,DI:QUAD 2 INPUT NAND GATE,CHK	80009	156-0350-05
U1344	156-0577-00	B020000	B100243	MICROCIRCUIT,DI:QUAD 2 INPUT AND GATE	80009	156-0577-00
U1344	156-0577-02	B100244		MICROCIRCUIT,DI:QUAD 2-INP AND GATE,SEL	27014	DM74C08
U1346	156-0627-00	B020000	B100243	MICROCIRCUIT,DI:SYN 4-B,UP-DOWN BINARY CTR	27014	MM74C193J
U1346	156-0627-02	B100244		MICROCIRCUIT,DI:SYN 4-B UP/DNBIN,CNTR,SEL	80009	156-0627-02

Ckt No.	Tektronix Part No.	Serial/Model No. Eff	Dscont	Name & Description	Mfr Code	Mfr Part Number
U1348	156-0629-00	B020000	B100243	MICROCIRCUIT,DI:30MHZ PRESETTABLE BIN CTR	01295	SN74LS197N
U1348	156-0629-01	B100244		MICROCIRCUIT,DI:30 MHZ PRESETTABLE BIN	01295	SN74LS197
U1352	156-0350-00	B020000	B100243	MICROCIRCUIT,DI:QUAD 2-INPUT NAND GATE	80009	156-0350-00
U1352	156-0350-05	B100244		MICROCIRCUIT,DI:QUAD 2 INPUT NAND GATE,CHK	80009	156-0350-05
U1356	156-0627-00	B020000	B100243	MICROCIRCUIT,DI:SYN 4-B,UP-DOWN BINARY CTR	27014	MM74C193J
U1356	156-0627-02	B100244		MICROCIRCUIT,DI:SYN 4-B UP/DNBIN,CNTR,SEL	80009	156-0627-02
U1358	156-0629-00	B020000	B100243	MICROCIRCUIT,DI:30MHZ PRESETTABLE BIN CTR	01295	SN74LS197N
U1358	156-0629-01	B100244		MICROCIRCUIT,DI:30 MHZ PRESETTABLE BIN	01295	SN74LS197
U1366	156-0627-00	B020000	B100243	MICROCIRCUIT,DI:SYN 4-B,UP-DOWN BINARY CTR	27014	MM74C193J
U1366	156-0627-02	B100244		MICROCIRCUIT,DI:SYN 4-B UP/DNBIN,CNTR,SEL	80009	156-0627-02
U1368	156-0629-00	B020000	B100243	MICROCIRCUIT,DI:30MHZ PRESETTABLE BIN CTR	01295	SN74LS197N
U1368	156-0629-01	B100244		MICROCIRCUIT,DI:30 MHZ PRESETTABLE BIN	01295	SN74LS197
U1370	156-0382-00	B020000	B100243	MICROCIRCUIT,DI:QUAD 2-INPUT NAND GATE	01295	SN74LS00(N OR J)
U1370	156-0382-02	B100244		MICROCIRCUIT,DI:QUAD 2-INP NAND GATE	01295	SN74LS00
U1372	156-0472-00	B020000	B100243	MICROCIRCUIT,DI:13-INPUT NAND GATE	01295	SN74S133N
U1372	156-0472-03	B100244		MICROCIRCUIT,DI:13 INPUT NAND GATE,SCRN	01295	SN74S133
U1402	156-0572-00	B020000	B100243	MICROCIRCUIT,DI:8 BIT SERIAL IN-PRL OUT	80009	156-0572-00
U1402	156-0572-02	B100244		MICROCIRCUIT,DI:8 BIT SERIAL IN/PRL OUT,SE	27014	MM74C164JA+
U1408	156-0572-00	B020000	B100243	MICROCIRCUIT,DI:8 BIT SERIAL IN-PRL OUT	80009	156-0572-00
U1408	156-0572-02	B100244		MICROCIRCUIT,DI:8 BIT SERIAL IN/PRL OUT,SE	27014	MM74C164JA+
U1410	156-0388-00	B020000	B100243	MICROCIRCUIT,DI:DUAL D-TYPE FLIP-FLOP	80009	156-0388-00
U1410	156-0388-03	B100244		MICROCIRCUIT,DI:DUAL D FLIP-FLOP	07263	74LS74A
U1422	156-0392-00	B020000	B100243	MICROCIRCUIT,DI:QUAD LATCH W/CLEAR	34335	SN74LS175N OR J
U1422	156-0392-03	B100244		MICROCIRCUIT,DI:QUAD LATCH W/CLEAR	01295	SN74S175NP3
U1438	156-0392-00	B020000	B100243	MICROCIRCUIT,DI:QUAD LATCH W/CLEAR	34335	SN74LS175N OR J
U1438	156-0392-03	B100244		MICROCIRCUIT,DI:QUAD LATCH W/CLEAR	01295	SN74S175NP3
U1454	156-0392-00	B020000	B100243	MICROCIRCUIT,DI:QUAD LATCH W/CLEAR	34335	SN74LS175N OR J
U1454	156-0392-03	B100244		MICROCIRCUIT,DI:QUAD LATCH W/CLEAR	01295	SN74S175NP3
U1470	156-0392-00	B020000	B100243	MICROCIRCUIT,DI:QUAD LATCH W/CLEAR	34335	SN74LS175N OR J
U1470	156-0392-03	B100244		MICROCIRCUIT,DI:QUAD LATCH W/CLEAR	01295	SN74S175NP3
U1492	156-0644-00	B020000	B100243	MICROCIRCUIT,DI:QUAD BILATERAL SWITCH	80009	156-0644-00
U1492	156-0644-03	B100244		MICROCIRCUIT,DI:QUAD BILATERAL SW,BURN-IN	80009	156-0644-03
U1494	156-0644-00	B020000	B100243	MICROCIRCUIT,DI:QUAD BILATERAL SWITCH	80009	156-0644-00
U1494	156-0644-03	B100244		MICROCIRCUIT,DI:QUAD BILATERAL SW,BURN-IN	80009	156-0644-03
U1513	156-1247-00	XB080000		MICROCIRCUIT,DI:DUAL LATCH	80009	156-1247-00
VR929	152-0241-00	X040000		SEMICOND DEVICE:ZENER,0.4W,33V,5%	04713	SZG35009K5
Y800	156-0106-00			MICROCIRCUIT,LI:MONOLITHIC,6-DIODE ARRAY	02735	CA3039

INSTRUMENT OPTIONS

Your instrument may be equipped with one or more instrument options. A brief description of each available option is given in the following discussion. Option information is also incorporated into the appropriate sections of the manual. Refer to Table 7-1 and the Table of Contents for location of option information.

Conversion kits, for most options, are available and can be installed at a later time. For further information on instrument options, see your Tektronix Catalog or contact your Tektronix Field Office.

OPTION 49

Deletes one P6451 Data Acquisition Probe from the standard accessories furnished with the 7D01.

TABLE 7-1
Option Information Locator

Instrument Options	Manual Section	Location of Information
Option 49 (Delete One P6451 Probe)	7 Instrument Options	Instrument Options All information is contained in this section.

DIAGRAMS AND CIRCUIT BOARD ILLUSTRATIONS

Symbols and Reference Designators

Electrical components shown on the diagrams are in the following units unless noted otherwise:

Capacitors =	Values one or greater are in picofarads (pF).
	Values less than one are in microfarads (μF).
Resistors =	Ohms (Ω).

Symbols used on the diagrams are based on ANSI Standard Y32.2-1975.

Logic symbology is based on ANSI Y32.14-1973 in terms of positive logic. Logic symbols depict the logic function performed and may differ from the manufacturer's data.

The following prefix letters are used as reference designators to identify components or assemblies on the diagrams.

A	Assembly, separable or repairable (circuit board, etc.)
AT	Attenuator, fixed or variable
B	Motor
BT	Battery
C	Capacitor, fixed or variable
CB	Circuit breaker
CR	Diode, signal or rectifier
DL	Delay line
DS	Indicating device (lamp)
E	Spark Gap
F	Fuse
FL	Filter
H	Heat dissipating device (heat sink, heat radiator, etc.)
HR	Heater
HY	Hybrid circuit
J	Connector, stationary portion
K	Relay
L	Inductor, fixed or variable
LR	Inductor/resistor combination
M	Meter
P	Connector, movable portion
Q	Transistor or silicon-controlled rectifier
R	Resistor, fixed or variable
RT	Thermistor
S	Switch
T	Transformer
TC	Thermocouple
TP	Test point
U	Assembly, inseparable or non-repairable (integrated circuit, etc.)
V	Electron tube
VR	Voltage regulator (zener diode, etc.)
Y	Crystal
Z	Phase shifter

The following special symbols are used on the diagrams:

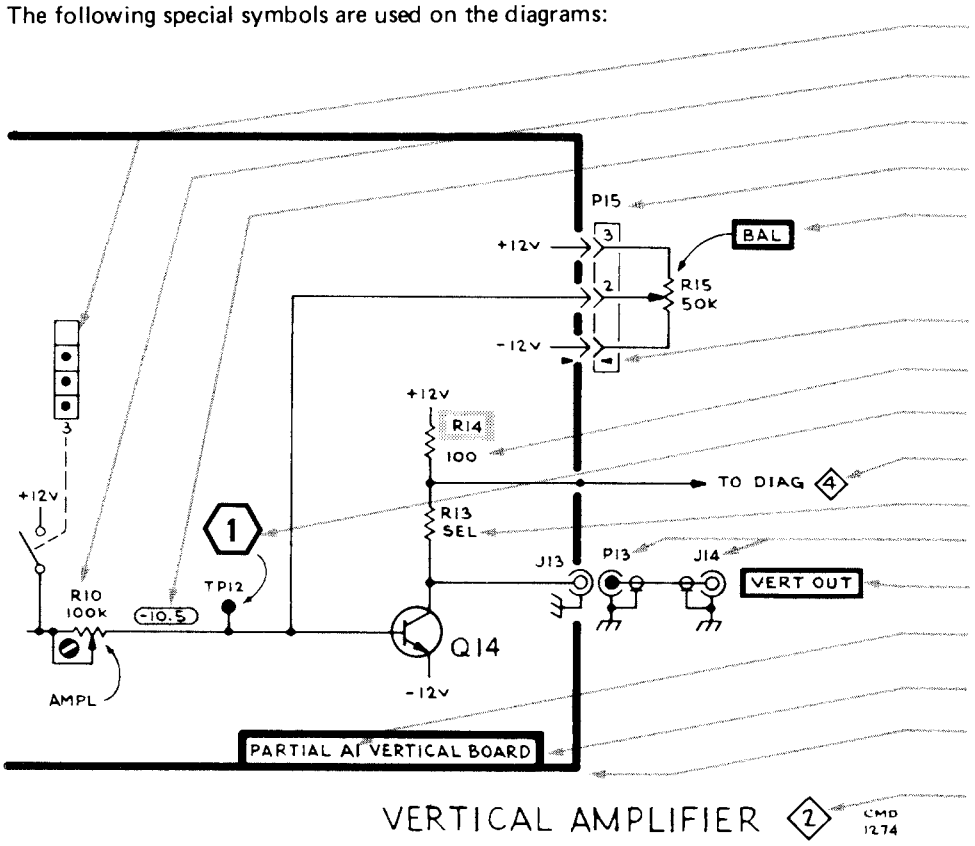

VERTICAL AMPLIFIER 2 CMD 1274

Cam Switch Closure Chart

Internal Screwdriver Adjustment

Test Voltage

Plug to E.C. Board

Panel Adjustment

Plug Index

Modified Component—See Parts List

Refer to Waveform

Refer to Diagram Number

SEL Value Selected at Factory

Coaxial Connector

Panel Connector

Assembly Number

Board Name

Etched Circuit Board Outlined in Black

Schematic Name and Number

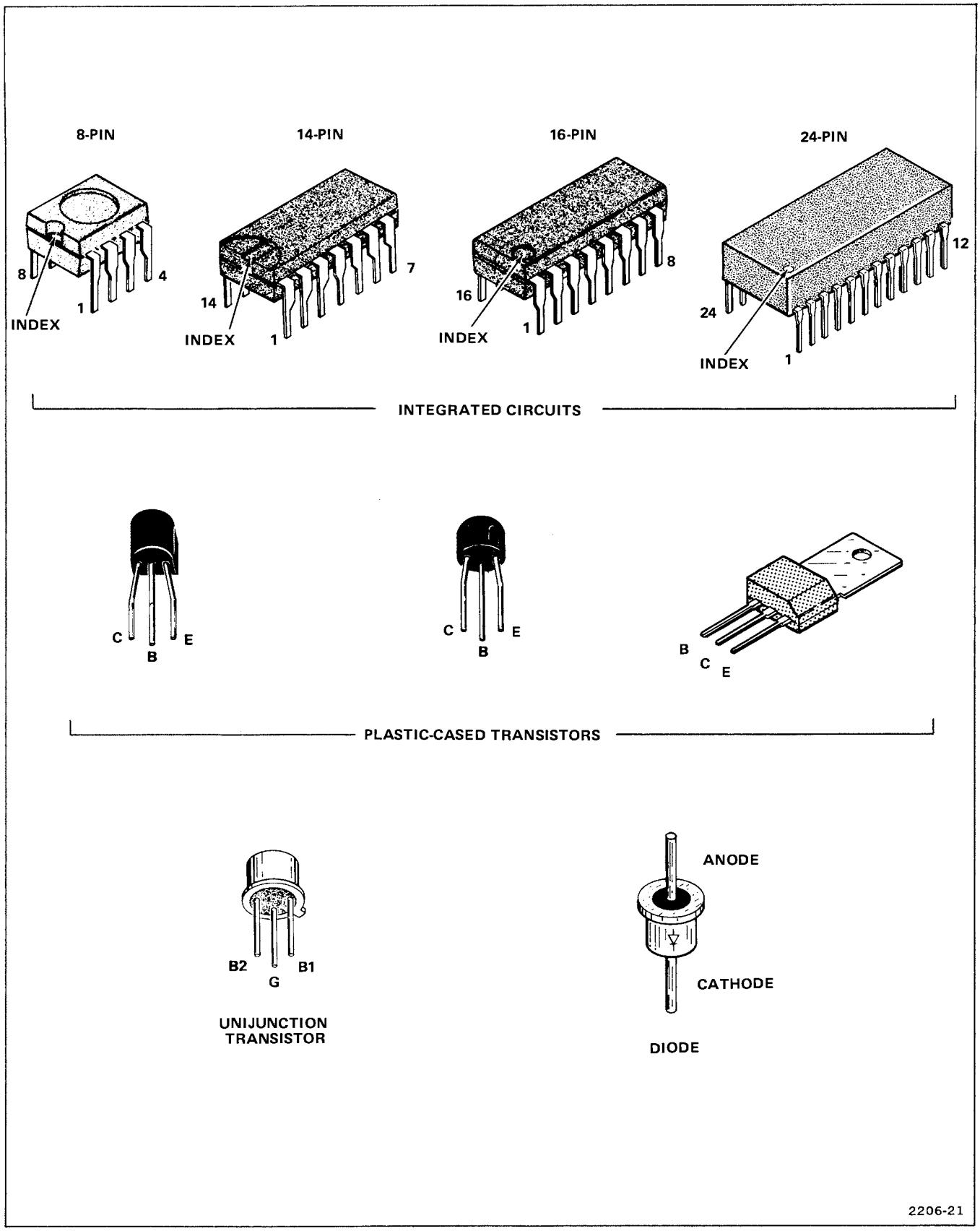

Figure 8-1. Semiconductor lead configuration.

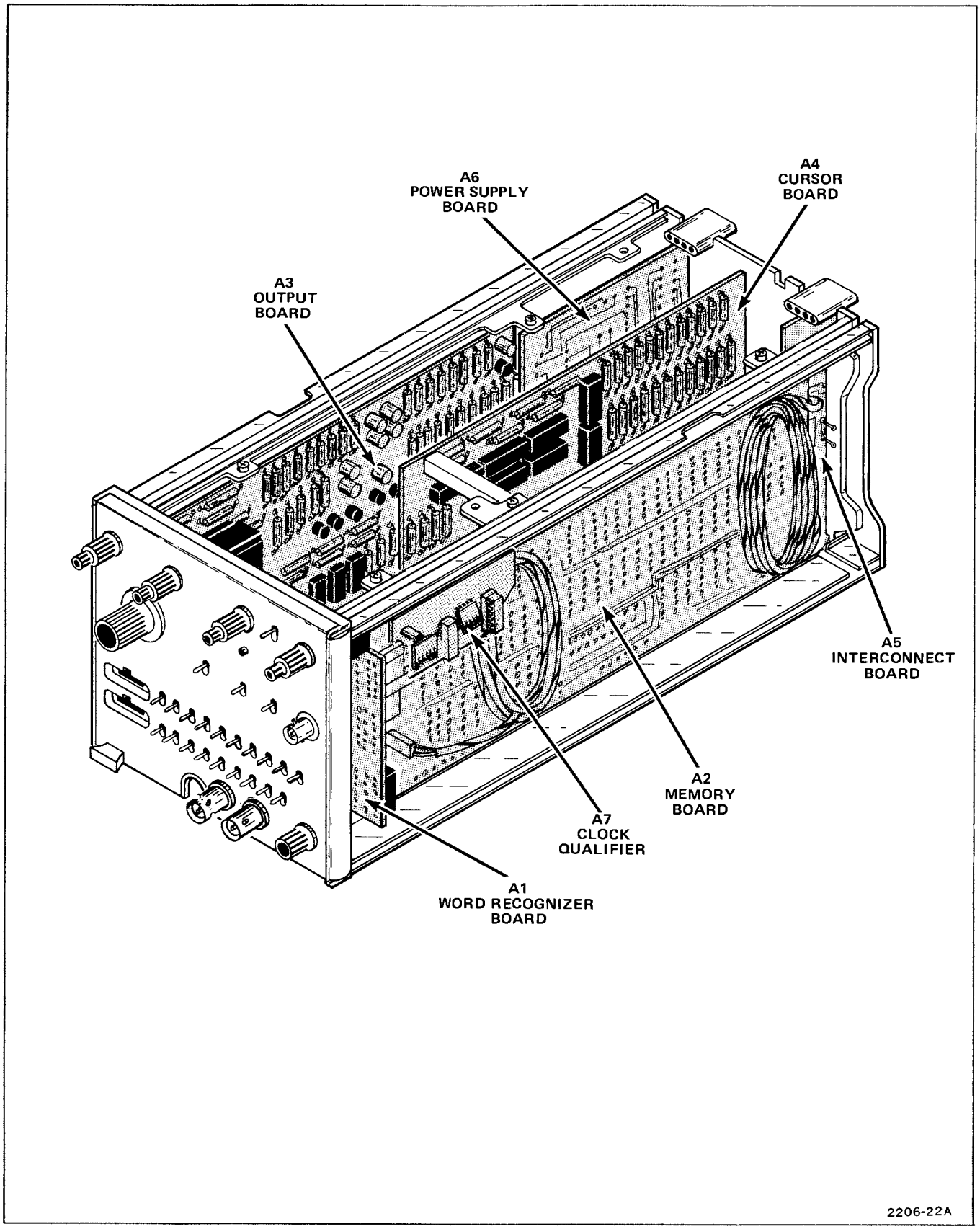

Figure 8-2. Circuit board locations.

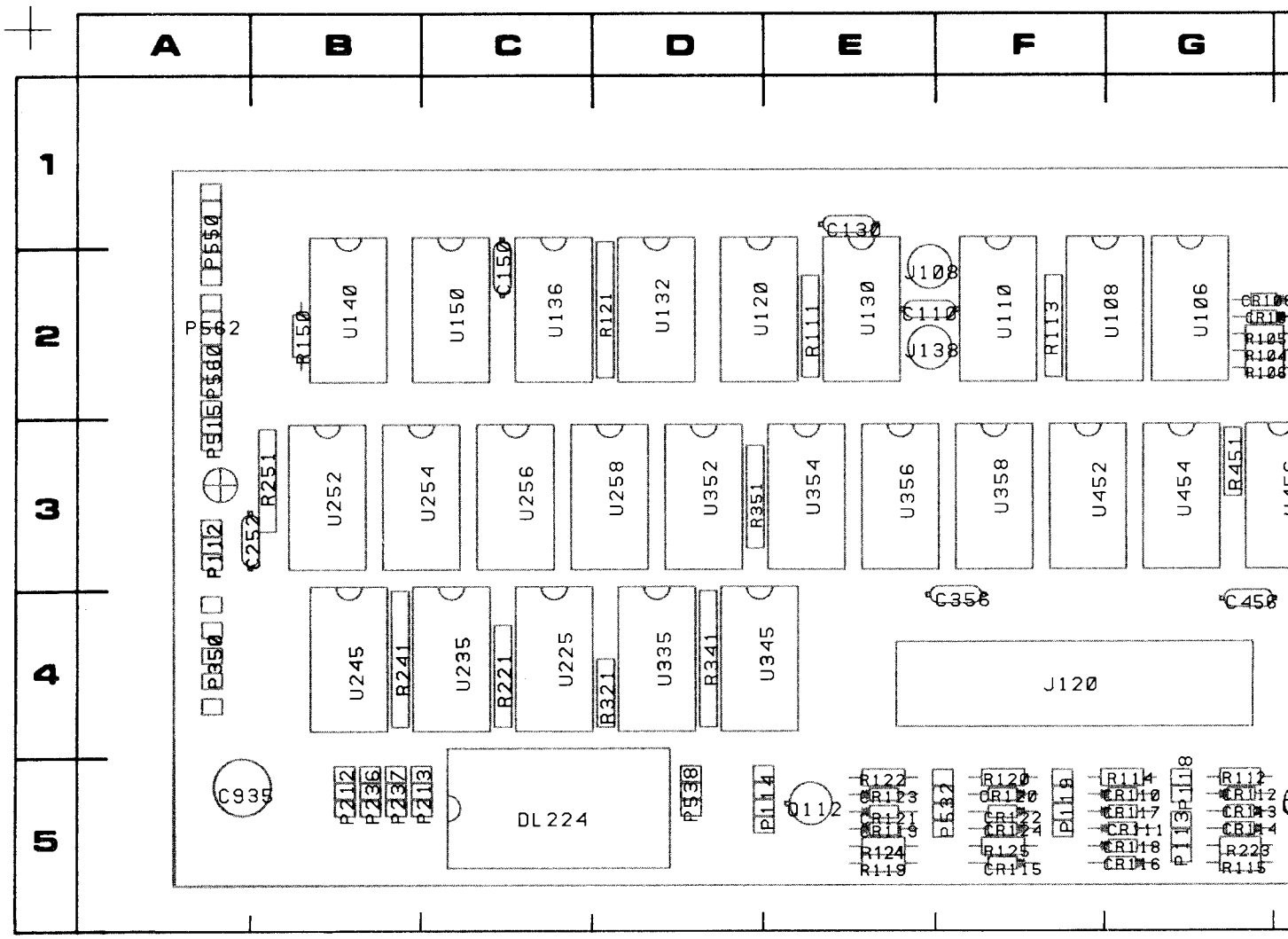

Figure 8-3. A2—Memory circuit board, component side.

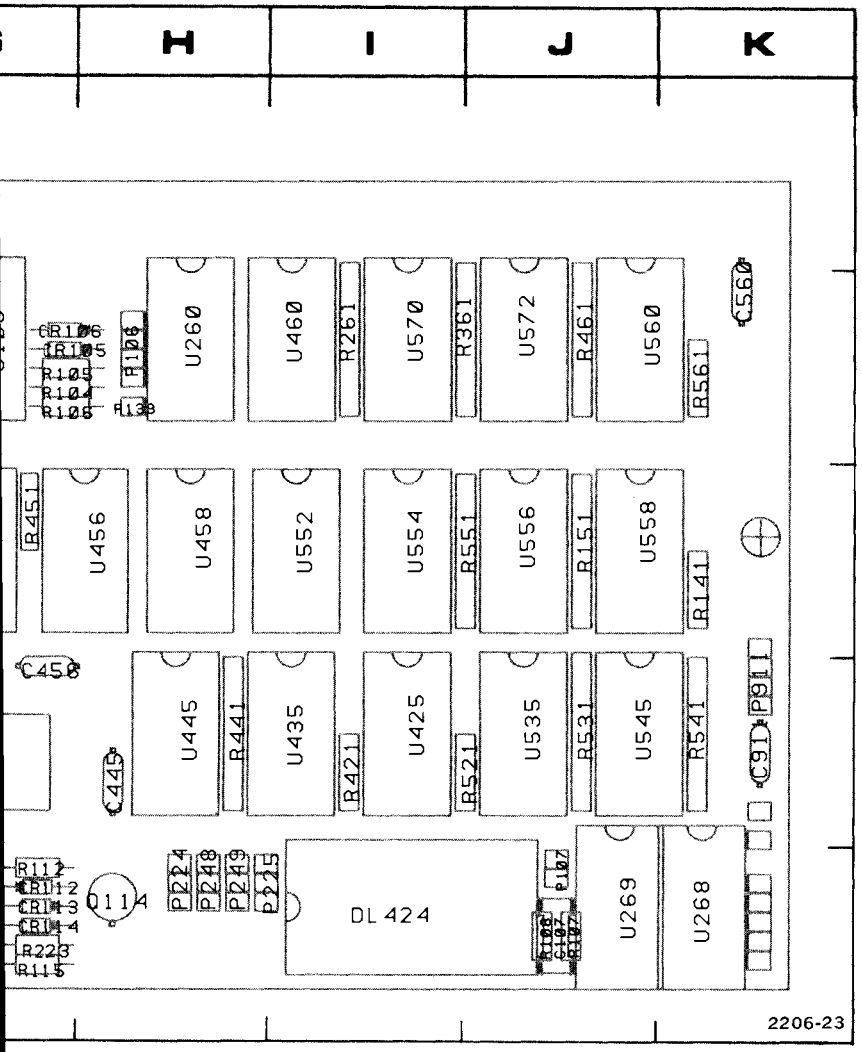

side.

CKT NO	GRID COORD	CKT NO	GRID COORD	CKT NO	GRID COORD	CKT NO	G C
C107	5J	J108	2E	R104	2G	R521	4
C110	2E	J120	4F	R105	2G	R531	4
C130	1E	J138	2E	R106	2G	R541	4
C150	2C			R107	5J	R551	3
C252	3A	P106	2H	R108	5J	R561	2
C356	4F	P107	5J	R111	2E		
C445	4H	P112	3A	R112	5G	U106	2
C456	4G	P113	5G	R113	2F	U108	2
C560	2K	P114	5E	R114	5G	U110	2
C911	4K	P118	5G	R115	5G	U120	2
C935	5A	P119	5F	R119	5E	U130	2
		P139	2H	R120	5F	U132	2
CR105	2G	P212	5B	R121	2D	U136	2
CR106	2G	P213	5B	R124	5E	U140	2
CR110	5G	P224	5H	R122	5E	U150	2
CR111	5G	P225	5I	R126	5F	U225	4
CR112	5G	P236	5B	R141	3K	U235	4
CR113	5G	P237	5B	R150	2B	U245	4
CR114	5G	P248	5H	R151	3J	U252	3
CR115	5F	P249	5H	R221	4C	U254	3
CR116	5G	P350	4A	R223	5G	U256	3
CR117	5G	P515	2A	R241	4B	U258	3
CR118	5G	P532	5E	R251	3B	U260	2
CR119	5E	P538	5D	R261	2I	U268	5
CR120	5F	P550	1A	R321	4D	U269	5
CR121	5E	P560	2A	R341	4D	U335	4
CR122	5F	P562	2A	R351	3D	U345	4
CR123	5E	P911	4K	R361	2I	U352	3
CR124	5F			R421	4I	U354	3
				R441	4H	U356	3
DL224	5C	Q112	5E	R451	3F	U358	3
DL424	5I	Q114	5H	R461	2J	U425	4

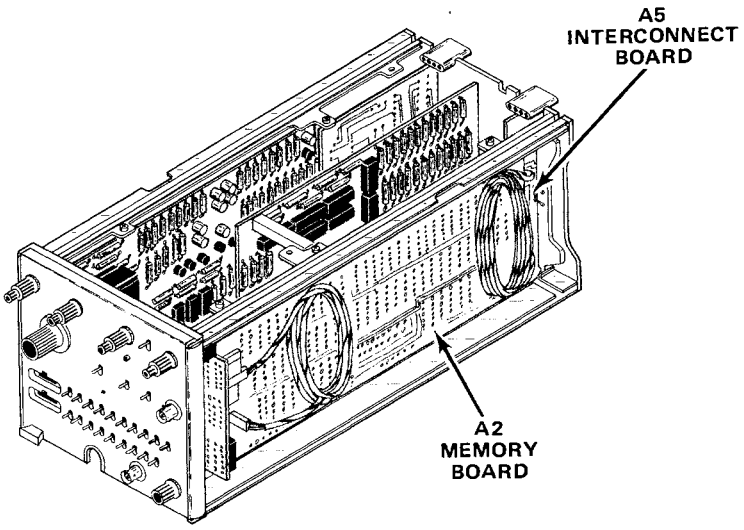

RID OORD	CKT NO	GRID COORD	CKT NO	GRID COORD
	R521	4J	U435	4I
	R531	4J	U445	4H
	R541	4K	U452	3F
	R551	3J	U454	3F
	R561	2K	U456	3H
			U458	3H
	U106	2G	U460	2I
	U108	2G	U535	4J
	U110	2F	U545	4J
	U120	2D	U552	3I
	U130	2E	U554	3I
	U132	2D	U556	3J
	U136	2C	U558	3J
	U140	2B	U560	2J
	U150	2C	U570	2I
	U225	4C	U572	2I
	U235	4C		
	U245	4B		
	U252	3B		
	U254	3C		
	U256	3C		
	U258	3D		
	U260	2H		
	U268	5J		
	U269	5J		
	U335	4D		
	U345	4E		
	U352	3D		
	U354	3E		
	U356	3E		
	U358	3F		
	U425	4I		

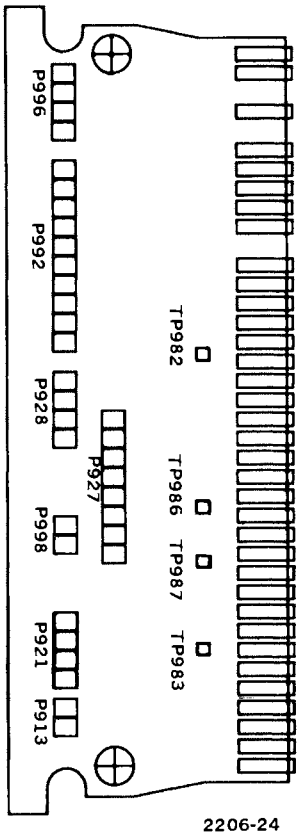

Figure 8-4. A5—Interconnect circuit board, as viewed with board installed.

Figure 8-5. A3—Output circuit board, component side.

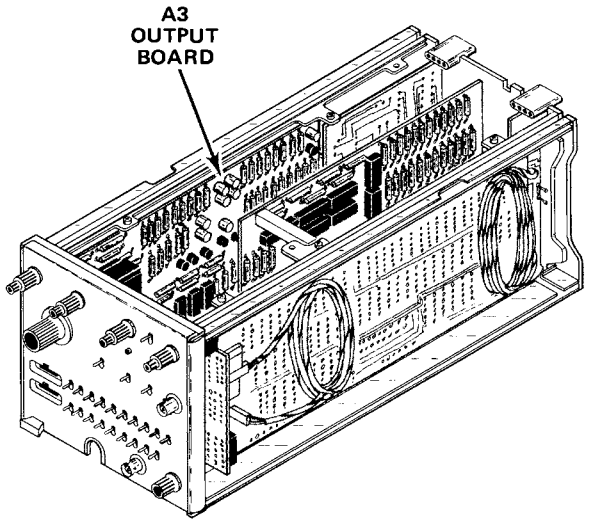

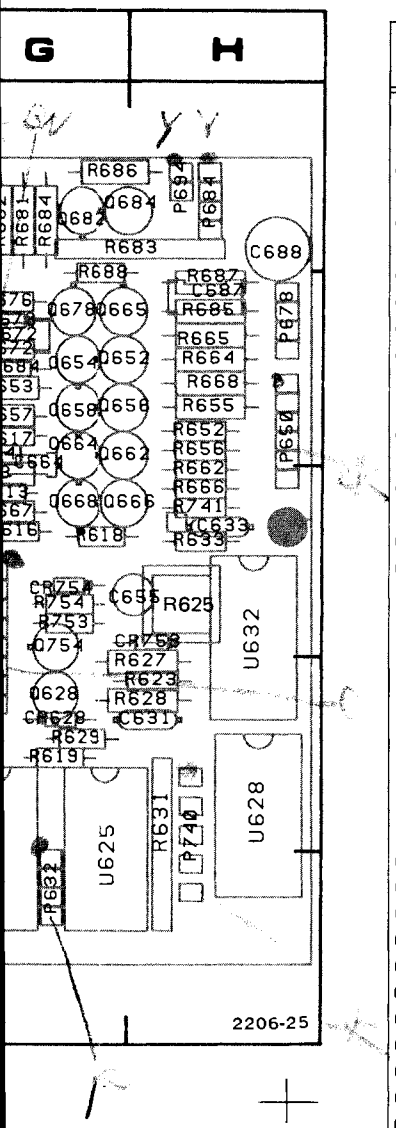

CKT NO	GRID COORD	CKT NO	GRID COORD	CKT NO	GRID COORD	CKT NO	GRID COORD	CKT NO	GRID COORD	CKT NO	GRID COORD
C606	2E	P510	2E	Q722	3C	R668	2H	R752	2C	U810	4B
C631	4H	P605	3E	Q732	3D	R671	2F	R753	3G	U812	4C
C633	3H	P612	3E	Q734	3D	R672	2G	R754	3G	U814	4D
C655	3H	P613	5F	Q736	3E	R673	2F	R760	1D	U816	3D
C664	3G	P614	4D	Q738	3F	R674	1E	R761	1D	U818	3C
C667	2G	P615	3F	Q740	3F	R675	1F	R762	1C	U820	3B
C672	2G	P620	5C	Q744	2E	R676	2G	R764	1C	U824	3C
C681	1E	P621	2F	Q748	2F	R678	1G	R765	1C	U828	4C
C687	2H	P632	5G	Q750	2C	R681	1G	R766	1B	U838	3B
C688	1H	P650	2H	Q762	1C	R682	1G	R767	1B		
C692	1E	P660	2F	Q764	1C	R683	1H	R768	2C	Y800	4B
C702	1A	P663	3G	Q768	2C	R684	1G	R769	2C		
C704	1A	P667	2F	Q772	1C	R685	2H	R770	2C		
C731	2E	P678	2H	Q784	2D	R686	1H	R771	1C		
C738	2F	P680	1F	R600	3E	R688	2G	R772	1C		
C750	2D	P684	1H	R601	3E	R691	2F	R774	1E		
C752	2D	P694	1H	R602	2F	R692	1F	R775	1E		
C753	2D	P708	1B	R603	2F	R693	1F	R780	1D		
C766	1B	P718	2E	R604	2E	R694	1F	R781	1D		
C768	2C	P738	3F	R606	3E	R696	1F	R782	1C		
C780	1E	P740	4H	R607	3E	R697	1F	R783	2D		
C786	1E	P780	2D	R608	2F	R698	1F	R784	1D		
C800	5B	P782	1C	R609	5E	R699	1G	R785	1D		
C801	5B	P782	2E	R611	3F	R701	1A	R786	1D		
C802	5B	P783	2E	R613	3G	R702	1A	R800	5B		
C811	5C	P798	1B	R614	2G	R703	1A	R801	3B		
C813	4E	P839	4B	R615	4G	R704	1A	R811	3C		
C831	3B			R616	3G	R707	1A	R813	4C		
CR607	3D	Q565	2H	R617	2G	R708	1B	R821	4C		
CR608	3E	Q602	2E	R618	3G	R709	2C	R831	3B		
CR615	4F	Q604	2E	R619	4G	R712	2C	R835	2F		
CR621	5D	Q606	2E	R620	5C	R713	2C				
CR622	5D	Q620	5D	R621	4E	R714	3C	RT691	2F		
CR628	4G	Q628	4G	R622	5C	R715	3C	RT782	1C		
CR673	2G	Q654	2G	R623	4H	R716	2C				
CR684	2G	Q656	2H	R625	3H	R717	2C	S825	2B		
CR703	1A	Q658	2G	R627	4H	R718	3C				
CR709	2C	Q662	2H	R628	4H	R720	3D	U608	3E		
CR710	2C	Q664	2G	R629	4G	R721	3D	U610	3E		
CR711	2C	Q665	2H	R631	4H	R731	2E	U615	5E		
CR712	2C	Q666	3H	R633	3H	R732	2D	U617	5E		
CR734	3D	Q668	3G	R652	2H	R733	2E	U619	3F		
CR738	3F	Q676	2F	R653	2G	R734	3D	U621	3F		
CR750	2D	Q678	2G	R655	2H	R735	2D	U622	5F		
CR753	3H	Q682	1G	R656	2H	R736	3D	U623	5F		
CR754	3G	Q684	1H	R657	2G	R737	2F	U624	5G		
CR764	1D	Q694	2F	R662	3H	R738	2F	U625	5G		
		Q702	1A	R663	3G	R739	3D	U628	4H		
J608	5D	Q704	1A	R664	2H	R740	3F	U632	3H		
J838	3C	Q708	1B	R665	2H	R741	3H	U740	3D		
		Q714	2C	R666	3H	R743	2F	U752	2D		
L800	5B	Q718	2C	R667	3G	R744	2F	U800	4B		

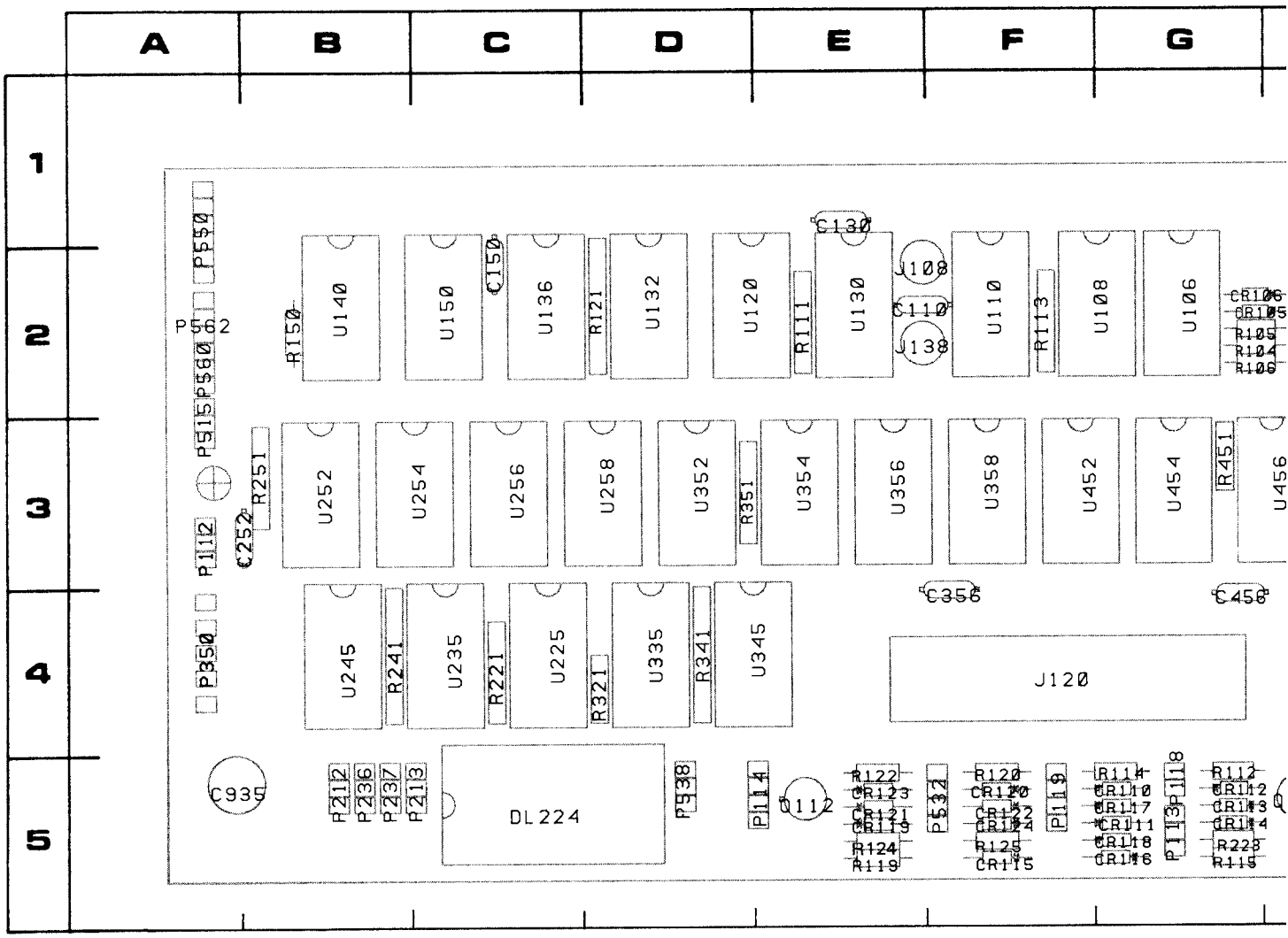

Figure 8-3. A2—Memory circuit board, component side.

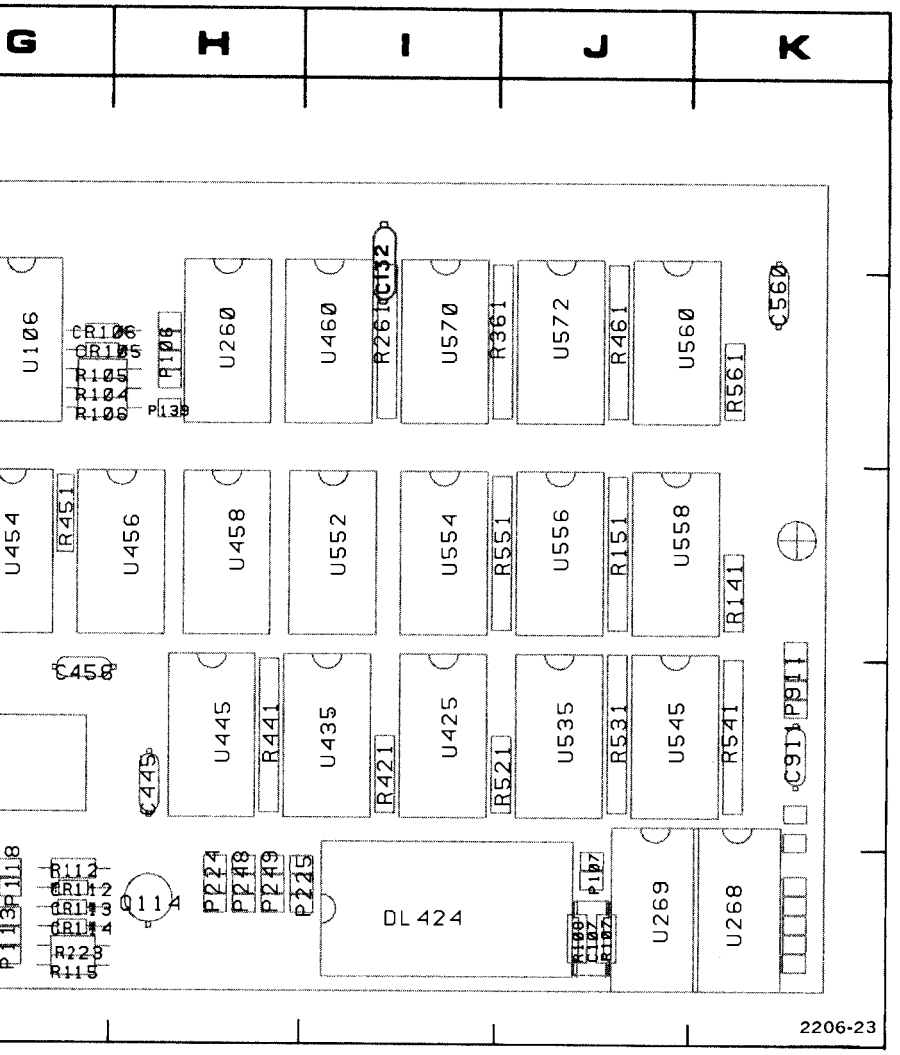

nent side.

CKT NO	GRID COORD	CKT NO	GRID COORD	CKT NO	GRID COORD	CKT NO
C107	5J	J108	2E	R104	2G	R521
C110	2E	J120	4F	R105	2G	R531
C130	1E	J138	2E	R106	2G	R541
C132	1I			R107	5J	R551
C150	2C	P106	2H	R108	5J	R561
C252	3A	P107	5J	R111	2E	
C356	4F	P112	3A	R112	5G	U106
C445	4H	P113	5G	R113	2F	U108
C456	4G	P114	5E	R114	5G	U110
C560	2K	P118	5G	R115	5G	U120
C911	4K	P119	5F	R119	5E	U130
C935	5A	P139	2H	R120	5F	U132
CR105	2G	P212	5B	R121	2D	U136
CR106	2G	P213	5B	R124	5E	U140
CR110	5G	P224	5H	R122	5E	U150
CR111	5G	P225	5I	R126	5F	U225
CR112	5G	P236	5B	R141	3K	U235
CR113	5G	P237	5B	R150	2B	U245
CR114	5G	P248	5H	R151	3J	U252
CR115	5F	P249	5H	R221	4C	U254
CR116	5G	P350	4A	R223	5G	U256
CR117	5G	P515	2A	R241	4B	U258
CR118	5G	P532	5E	R251	3B	U260
CR119	5E	P538	5D	R261	2I	U268
CR120	5F	P550	1A	R321	4D	U269
CR121	5E	P560	2A	R341	4D	U335
CR122	5F	P562	2A	R351	3D	U345
CR123	5E	P911	4K	R361	2I	U352
CR124	5F			R421	4I	U354
				R441	4H	U356
DL224	5C	Q112	5E	R451	3F	U358
DL424	5I	Q114	5H	R461	2J	U425

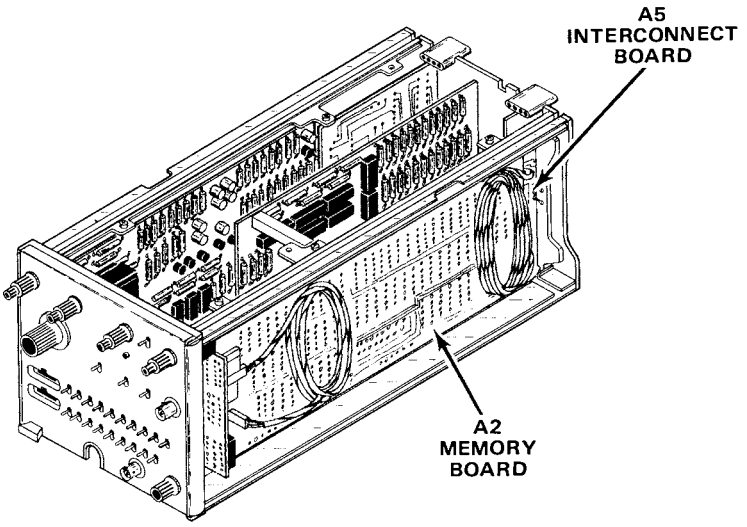

RID OORD	CKT NO	GRID COORD	CKT NO	GRID COORD
	R521	4J	U435	4I
	R531	4J	U445	4H
	R541	4K	U452	3F
	R551	3J	U454	3F
	R561	2K	U456	3H
			U458	3H
	U106	2G	U460	2I
	U108	2G	U535	4J
	U110	2F	U545	4J
	U120	2D	U552	3I
	U130	2E	U554	3I
	U132	2D	U556	3J
	U136	2C	U558	3J
	U140	2B	U560	2J
	U150	2C	U570	2I
	U225	4C	U572	2I
	U235	4C		
	U245	4B		
	U252	3B		
	U254	3C		
	U256	3C		
	U258	3D		
	U260	2H		
	U268	5J		
	U269	5J		
	U335	4D		
	U345	4E		
	U352	3D		
	U354	3E		
	U356	3E		
	U358	3F		
	U425	4I		

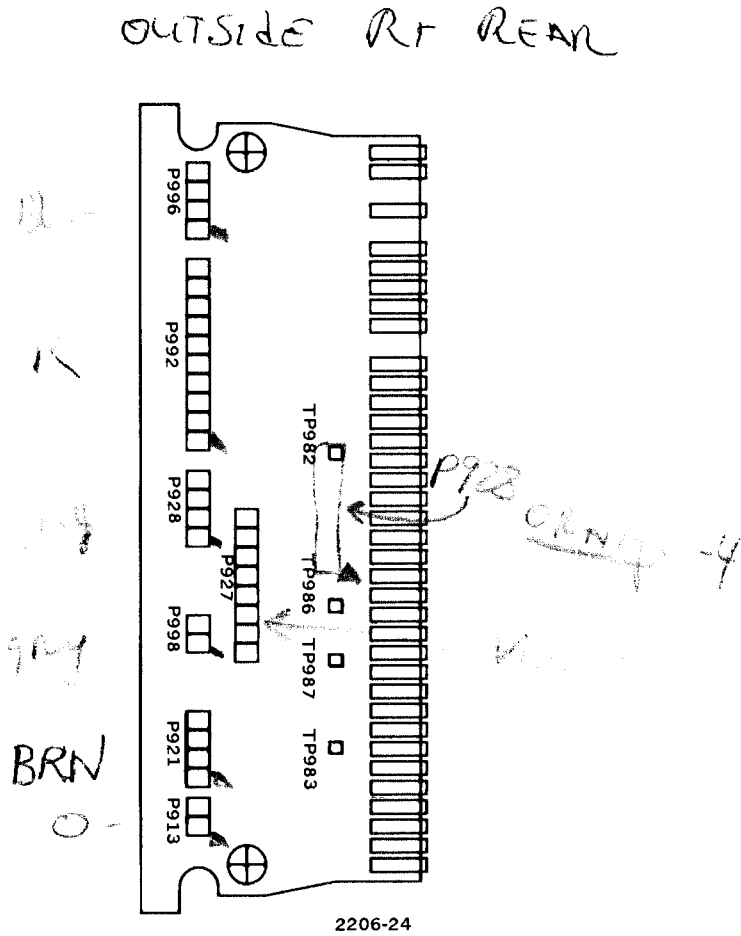

Figure 8-4. A5—Interconnect circuit board, as viewed with board installed.

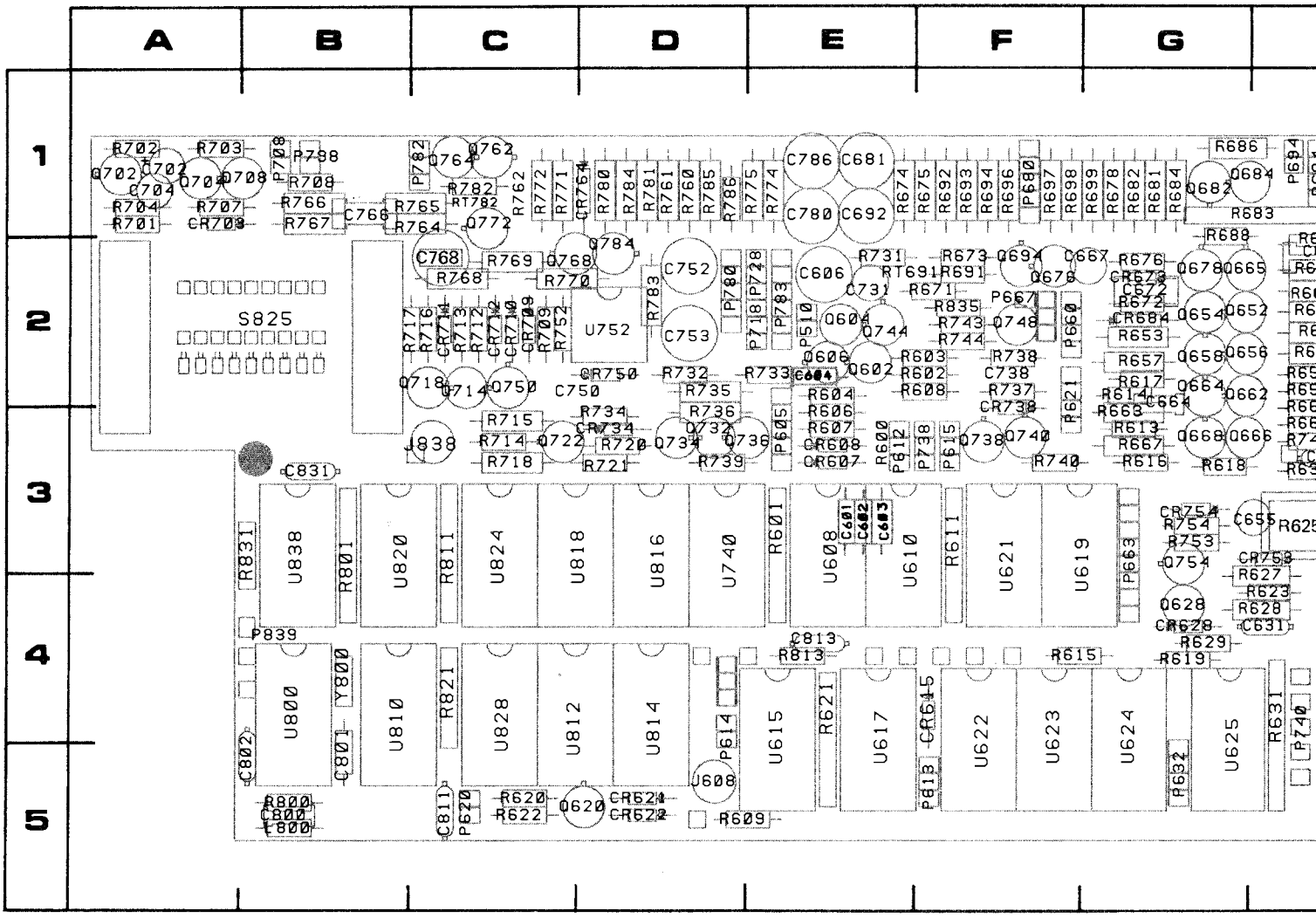

Figure 8-5. A3—Output circuit board, component side.

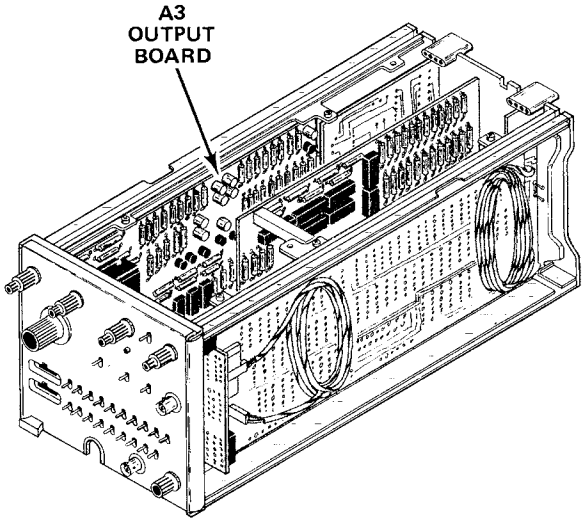

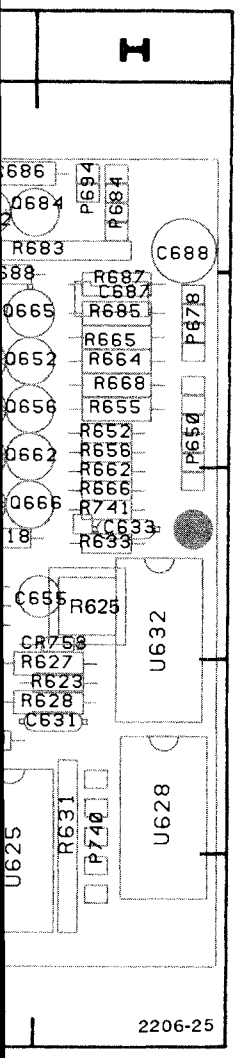

CKT NO	GRID COORD	CKT NO	GRID COORD	CKT NO	GRID COORD	CKT NO	GRID COORD	CKT NO	GRID COORD	CKT NO	GRID COORD
C601	3E	J608	5D	Q694	2F	R657	2G	R736	3D	U622	5F
C602	3E	J838	3C	Q702	1A	R662	3H	R737	2F	U623	5F
C603	3E			Q704	1A	R663	3G	R738	2F	U624	5G
C604	2E	L800	5B	Q708	1B	R664	2H	R739	3D	U625	5G
C606	2E			Q714	2C	R665	2H	R740	3F	U628	4H
C631	4H	P510	2E	Q718	2C	R666	3H	R741	3H	U632	3H
C633	3H	P605	3E	Q722	3C	R667	3G	R743	2F	U740	3D
C655	3H	P612	3E	Q732	3D	R668	2H	R744	2F	U752	2D
C664	3G	P613	5F	Q734	3D	R671	2F	R752	2C	U800	4B
C667	2G	P614	4D	Q736	3E	R672	2G	R753	3G	U810	4B
C672	2G	P615	3F	Q738	3F	R673	2F	R754	3G	U812	4C
C681	1E	P620	5C	Q740	3F	R674	1E	R760	1D	U814	4D
C687	2H	P621	2F	Q744	2E	R675	1F	R761	1D	U816	3D
C688	1H	P632	5G	Q748	2F	R676	2G	R762	1C	U818	3C
C692	1E	P650	2H	Q750	2C	R678	1G	R764	1C	U820	3B
C702	1A	P660	2F	Q762	1C	R681	1G	R765	1C	U824	3C
C704	1A	P663	3G	Q764	1C	R682	1G	R766	1B	U828	4C
C731	2E	P667	2F	Q768	2C	R683	1H	R767	1B	U838	3B
C738	2F	P678	2H	Q772	1C	R684	1G	R768	2C		
C750	2D	P680	1F	Q784	2D	R685	2H	R769	2C	Y800	4B
C752	2D	P684	1H	R600	3E	R686	1H	R770	2C		
C753	2D	P694	1H	R601	3E	R688	2G	R771	1C		
C766	1B	P708	1B	R602	2F	R691	2F	R772	1C		
C768	2C	P718	2E	R603	2F	R692	1F	R774	1E		
C780	1E	P728	2E	R604	2E	R693	1F	R775	1E		
C800	5B	P738	3F	R606	3E	R694	1F	R780	1D		
C801	5B	P740	4H	R607	3E	R696	1F	R781	1D		
C802	5B	P780	2D	R608	2F	R697	1F	R782	1C		
C811	5C	P782	1C	R609	5E	R698	1F	R783	2D		
C813	4E	P783	2E	R611	3F	R699	1G	R784	1D		
C831	3B	P798	1B	R613	3G	R701	1A	R785	1D		
		P839	4B	R614	2G	R702	1A	R786	1D		
CR607	3D			R615	4G	R703	1A	R800	5B		
CR608	3E	Q565	2H	R616	3G	R704	1A	R801	3B		
CR615	4F	Q602	2E	R617	2G	R707	1A	R811	3C		
CR621	5D	Q604	2E	R618	3G	R708	1B	R813	4C		
CR622	5D	Q606	2E	R619	4G	R709	2C	R821	4C		
CR628	4G	Q620	5D	R620	5C	R712	2C	R831	3B		
CR673	2G	Q628	4G	R621	4E	R713	2C	R835	2F		
CR684	2G	Q654	2G	R622	5C	R714	3C				
CR703	1A	Q656	2H	R623	4H	R715	3C	RT691	2F		
CR709	2C	Q658	2G	R625	3H	R716	2C	RT782	1C		
CR710	2C	Q662	2H	R627	4H	R717	2C				
CR711	2C	Q664	2G	R628	4H	R718	3C	S825	2B		
CR712	2C	Q665	2H	R629	4G	R720	3D				
CR734	3D	Q666	3H	R631	4H	R721	3D	U608	3E		
CR738	3F	Q668	3G	R633	3H	R731	2E	U610	3E		
CR750	2D	Q676	2F	R652	2H	R732	2D	U615	5E		
CR753	3H	Q678	2G	R653	2G	R733	2E	U617	5E		
CR754	3G	Q682	1G	R655	2H	R734	3D	U619	3F		
CR764	1D	Q684	1H	R656	2H	R735	2D	U621	3F		

B 1980

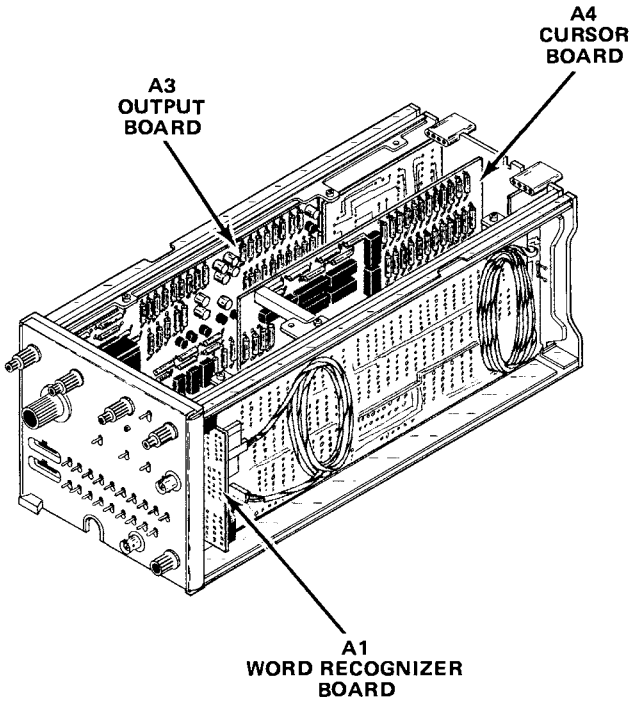
A4
CURSOR
BOARD
A3
OUTPUT
BOARD
A1
WORD RECOGNIZER
BOARD

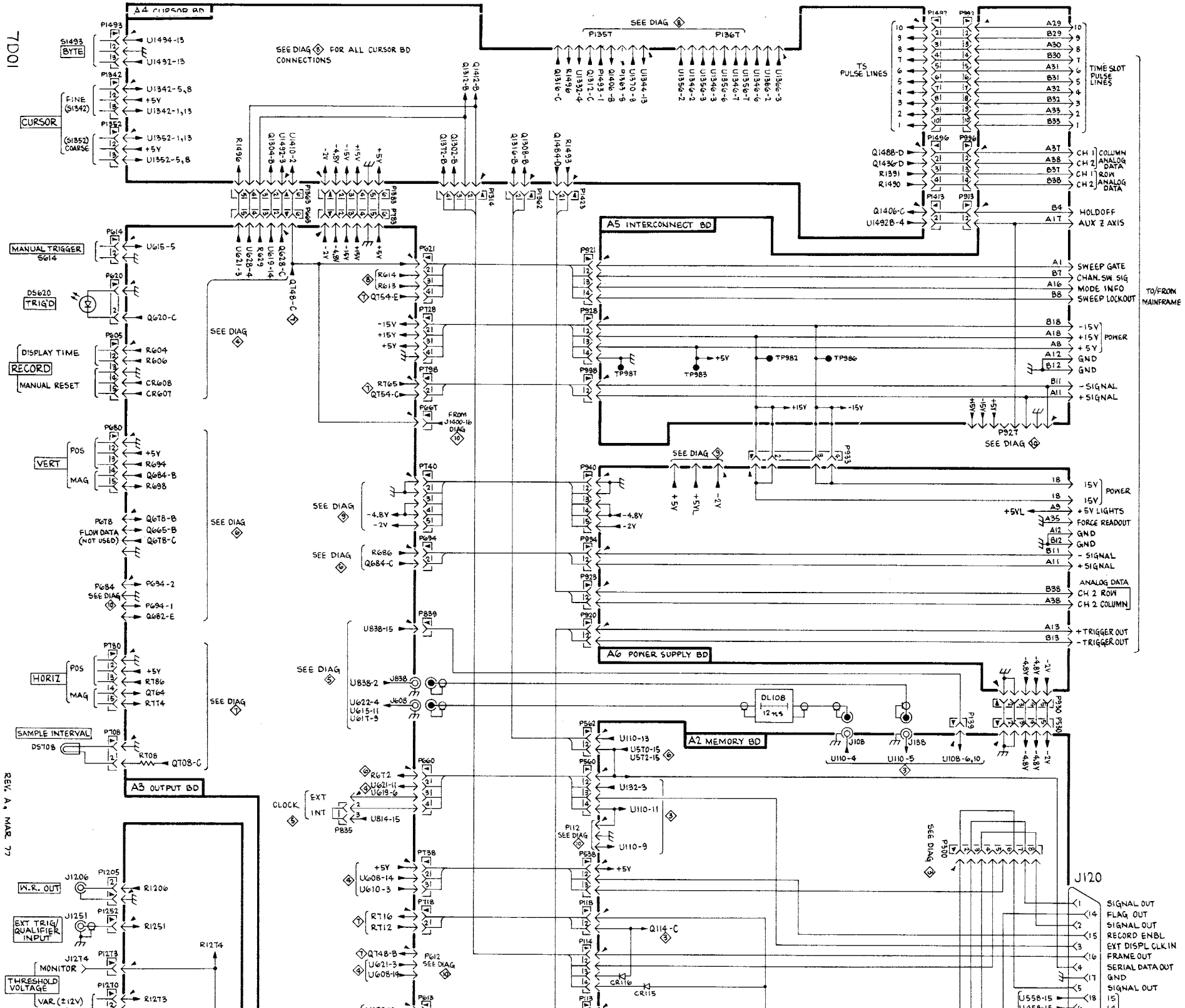
7D01
A4 CURSOR BD
SEE DIAG 8 FOR ALL CURSOR BD CONNECTIONS
S1493 BYTE
CURSOR
FINE (S1342)
(S1352) COARSE
MANUAL TRIGGER S614
D5620 TRIG'D
DISPLAY TIME
RECORD
MANUAL RESET
VERT
POS
MAG
P6T8 FLOW DATA (NOT USED)
P684 SEE DIAG 10
HORIZ
SAMPLE INTERVAL
D5T08
A3 OUTPUT BD
W.R. OUT
EXT TRIG/ QUALIFIER INPUT
MONITOR
THRESHOLD VOLTAGE
VAR (±12V)
CLOCK
EXT
INT
P835
SEE DIAG 8
P135T
P136T
TS PULSE LINES
TIME SLOT PULSE LINES
COLUMN ANALOG DATA
ROW ANALOG DATA
HOLDOFF
AUX Z AXIS
A5 INTERCONNECT BD
SWEEP GATE
CHAN. SW. SIG
MODE INFO
SWEEP LOCKOUT
TO/FROM MAINFRAME
POWER
GND
- SIGNAL
+ SIGNAL
FROM J1400-16 DIAG 10
SEE DIAG 9
SEE DIAG 10
+5V LIGHTS
FORCE READOUT
ANALOG DATA
CH 2 ROW
CH 2 COLUMN
+TRIGGER OUT
-TRIGGER OUT
A6 POWER SUPPLY BD
DL108 12 ms
A2 MEMORY BD
SEE DIAG 5
J120
SIGNAL OUT
FLAG OUT
SIGNAL OUT
RECORD ENBL
EXT DISPL CLK IN
FRAME OUT
SERIAL DATA OUT
GND
SIGNAL OUT

REV. A, MAR. 77

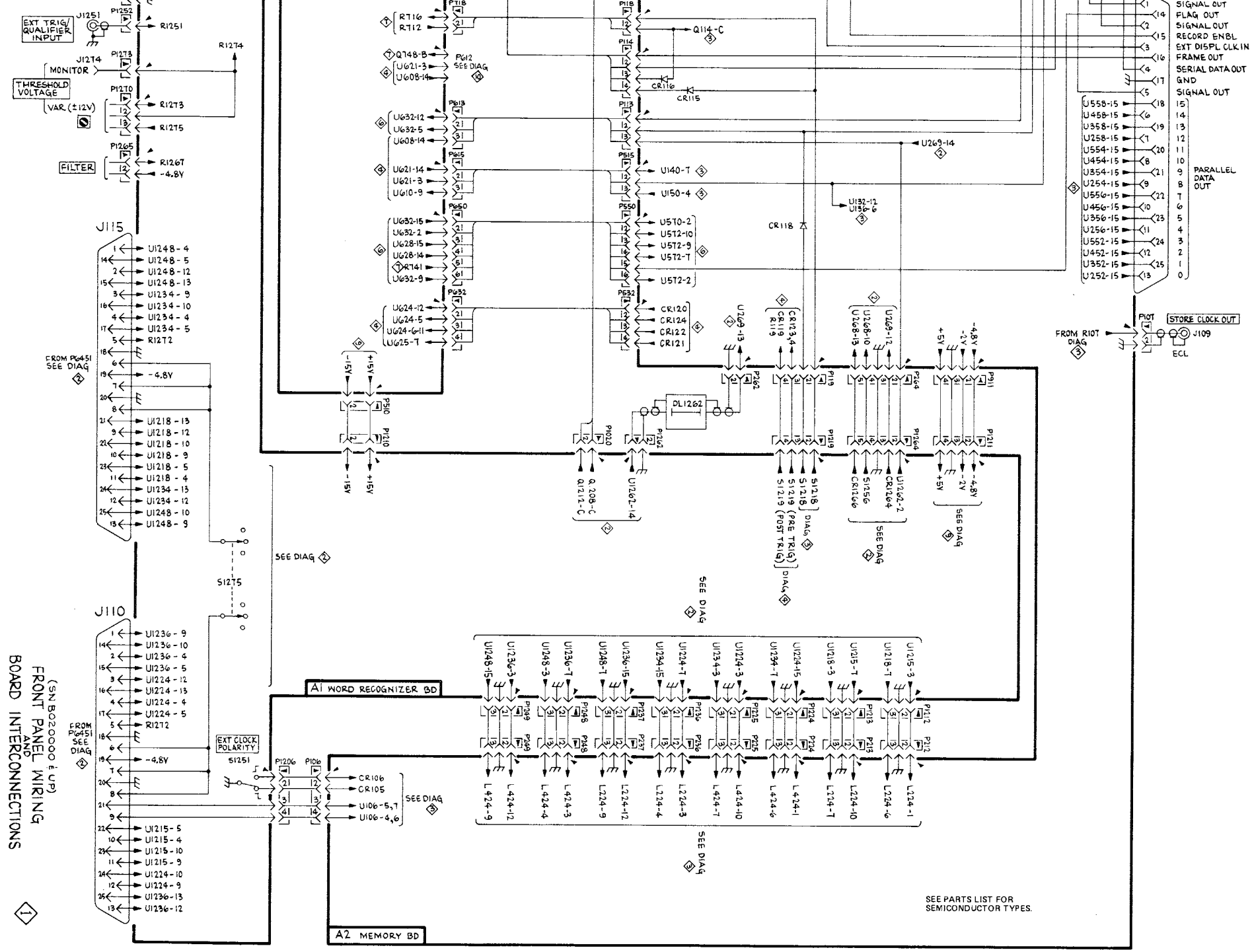
(SN B020000 & UP)
FRONT PANEL WIRING
AND
BOARD INTERCONNECTIONS
EXT TRIG/ QUALIFIER INPUT
J1251
MONITOR
J1274
THRESHOLD VOLTAGE
VAR (±12V)
FILTER
J115
J110
FROM P0451 SEE DIAG
S1275
EXT CLOCK POLARITY
S1251
A1 WORD RECOGNIZER BD
A2 MEMORY BD
SEE DIAG
SIGNAL OUT
FLAG OUT
SIGNAL OUT
RECORD ENBL
EXT DISPL CLK IN
FRAME OUT
SERIAL DATA OUT
GND
SIGNAL OUT
PARALLEL DATA OUT
STORE CLOCK OUT
J109
ECL
FROM R107 DIAG
DL1262
SEE PARTS LIST FOR SEMICONDUCTOR TYPES.

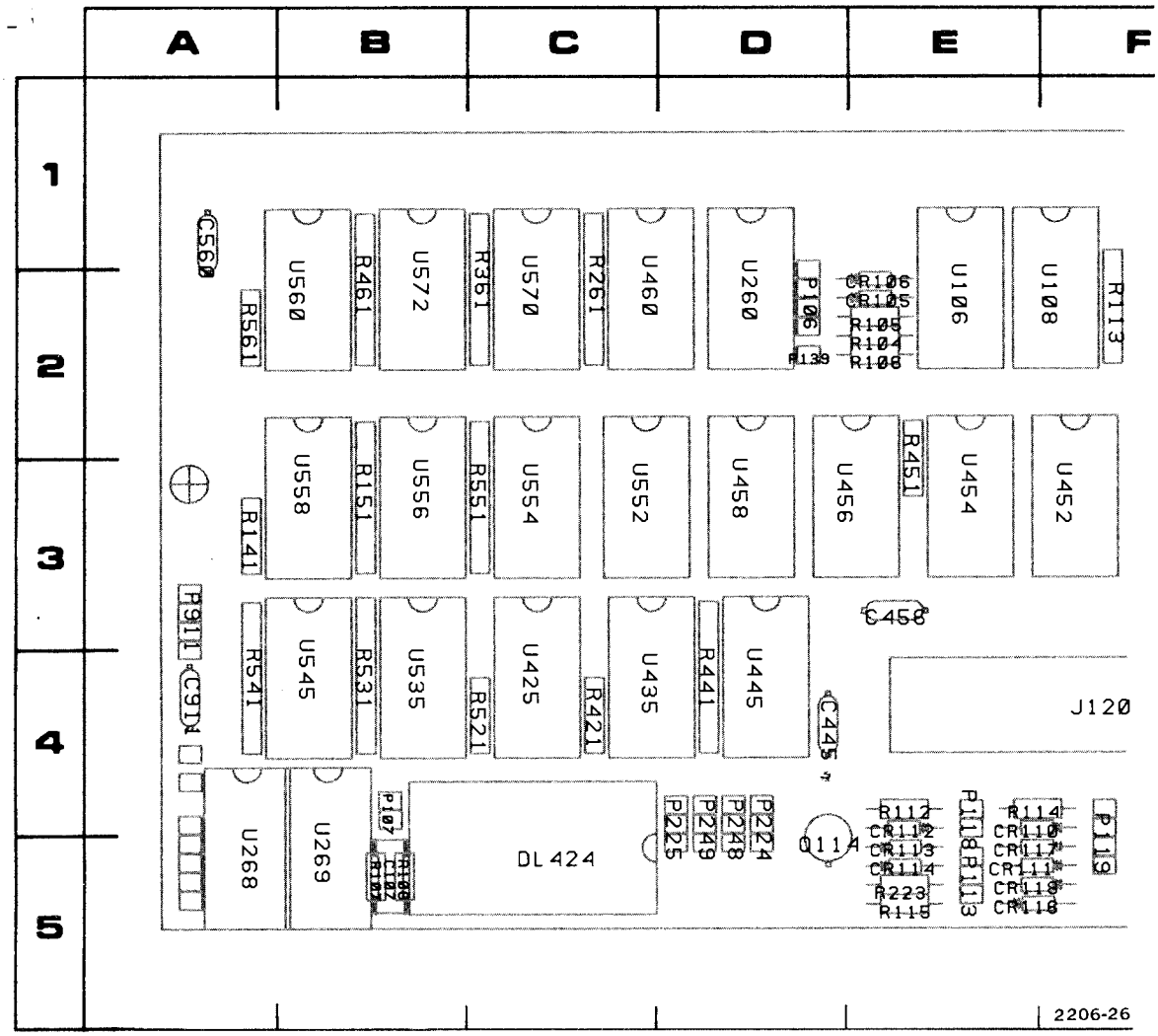

COMPONENT LOCATIONS AS VIEWED WITH BOARD INSTALLED. FOR VIEW OF COMPONENT SIDE OF BOARD, SEE FIGURE 8-3 IN THIS SECTION.

Figure 8-6. Partial A2—Memory circuit board. Component locations as viewed with board installed.

CKT NO	GRID COORD	CKT NO	GRID COORD	CKT NO	GRID COORD	CKT NO	GRID COORD	CKT NO	GRID COORD	CKT NO	GRID COORD	CKT NO	GRID COORD
C107	5B	CR118	5E	P139	2D	R108	5B	R361	2C	U235	4I	U460	2C
C110	2G	CR119	5G	P212	5J	R111	2G	R421	4C	U245	4J	U535	4B
C130	1G	CR120	4F	P213	5J	R112	4E	R441	4D	U252	3J	U545	4B
C150	1I	CR121	5G	P224	4D	R113	2F	R451	3E	U254	3J	U552	3C
C252	3K	CR122	5F	P225	4D	R114	4E	R461	2B	U256	3I	U554	3C
C356	3F	CR123	4G	P236	5J	R115	5E	R521	4C	U258	3H	U556	3B
C445	4D	CR124	5F	P237	5J	R119	5G	R531	4B	U260	2D	U558	3B
C456	3E			P248	4D	R120	4F	R541	4A	U268	5A	U560	2B
C560	1A	DL224	5I	P249	4D	R121	5G	R551	3C	U269	5B	U570	2C
C911	4A	DL424	5C	P350	4K	R122	4G	R561	2A	U335	4H	U572	2B
C935	4K			P532	5G	R125	5F			U345	4H		
		J108	1G	P538	4H	R141	3A	U106	2E	U352	3H		
CR105	2E	J120	4F	P550	1K	R150	2J	U108	2F	U354	3G		
CR106	2E	J138	2G	P911	3A	R151	3B	U110	2F	U356	3G		
CR110	4E					R221	4I	U120	2H	U358	3F		
CR111	5E	P106	2D	Q112	5G	R223	5E	U130	2G	U425	4C		
CR112	4E	P107	4B	Q114	5D	R241	4J	U132	2H	U435	4C		
CR113	5E	P112	3K			R251	3J	U132	2H	U445	4D		
CR114	5E	P113	5E	R104	2E	R261	2C	U136	2I	U452	3F		
CR115	5F	P114	4H	R105	2E	R321	4H	U140	2J	U454	3E		
CR116	5E	P118	4E	R106	2E	R341	4H	U150	2I	U456	3D		
CR117	5E	P119	5F	R107	5B	R351	3H	U225	4I	U458	3D		

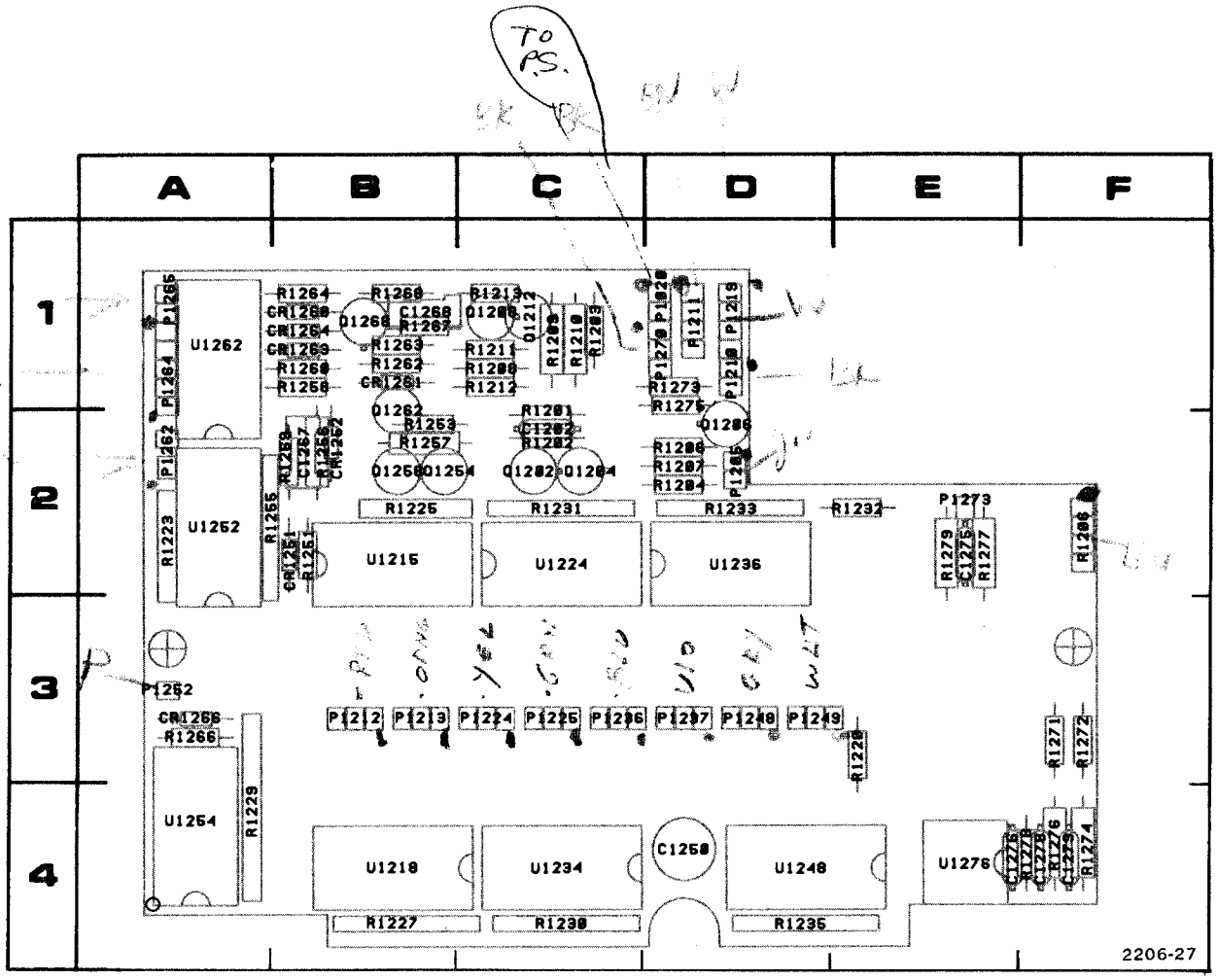

Figure 8-7. A1—Word Recognizer circuit board component locations.

CKT NO	GRID COORD	CKT NO	GRID COORD	CKT NO	GRID COORD	CKT NO	GRID COORD
C1202	2C	P1236	3C	R1206	2F	R1263	1B
C1250	4D	P1237	3D	R1207	2D	R1264	1B
C1267	2B	P1248	3D	R1208	1C	R1266	3A
C1268	1B	P1249	3D	R1209	1C	R1267	1B
C1275	2E	P1252	3A	R1210	1C	R1271	3F
C1276	4E	P1262	2A	R1211	1C	R1272	3F
C1278	4F	P1264	1A	R1212	1C	R1273	1D
C1279	4F	P1265	1A	R1213	1C	R1274	4F
		P1270	1D	R1220	3E	R1275	1D
CR1251	2B	P1273	2E	R1223	2A	R1276	4F
CR1252	2B			R1225	2B	R1277	2E
CR1261	1B	Q1202	2C	R1227	4B	R1278	4F
CR1263	1B	Q1204	2C	R1229	4A	R1279	2E
CR1264	1B	Q1206	2D	R1230	4C		
CR1266	3A	Q1208	1C	R1231	2C	U1215	2B
CR1268	1B	Q1212	1C	R1232	2E	U1218	4B
		Q1254	2B	R1233	2D	U1224	2C
P1020	1D	Q1258	2B	R1235	4D	U1236	2D
P1205	2D	Q1262	2B	R1250	1B	U1240	4D
P1210	1D	Q1268	1B	R1251	2B	U1252	2A
P1211	1D			R1253	2B	U1254	4A
P1212	3B	R1200	1C	R1255	2A	U1262	1A
P1213	3B	R1201	2C	R1256	2B	U1276	4E
P1219	1D	R1202	2C	R1257	2B		
P1224	3C	R1203	1C	R1260	1B		
P1225	3C	R1204	2D	R1262	1B		

GRID COORD
2C
4B
4B
3C
3C
3B
3B
2B
2C
2B

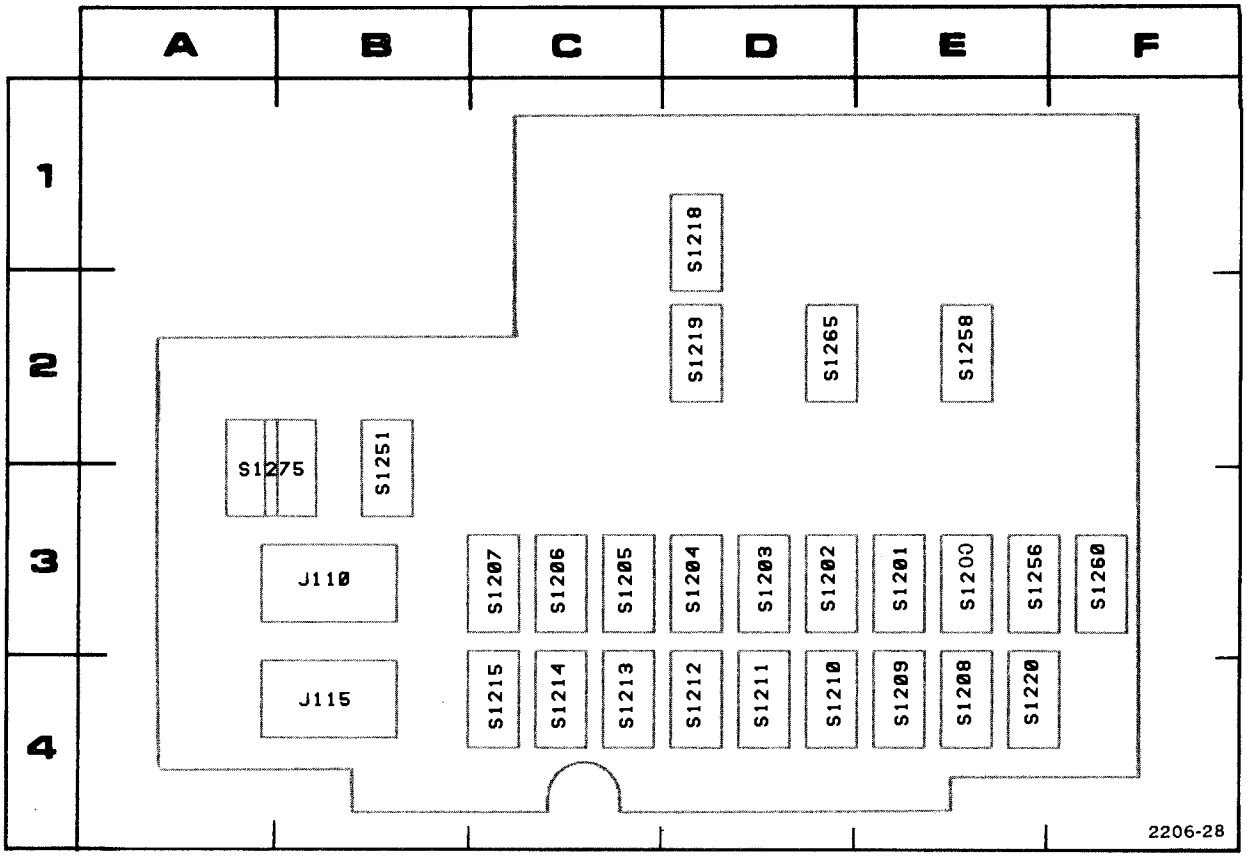

Figure 8-8. A1—Word Recognizer circuit board. Switch locations as viewed from front panel of instrument.

CKT NO	GRID COORD	CKT NO	GRID COORD
J115	4B	S1211	4D
J110	3B	S1212	4D
		S1213	4C
S1200	3E	S1214	4C
S1201	3E	S1215	4C
S1202	3D	S1218	1D
S1203	3D	S1219	2D
S1204	3D	S1220	4E
S1205	3C	S1251	3B
S1206	3C	S1256	3E
S1207	3C	S1258	2E
S1208	4E	S1260	3F
S1209	4E	S1265	2D
S1210	4D	S1275	3A

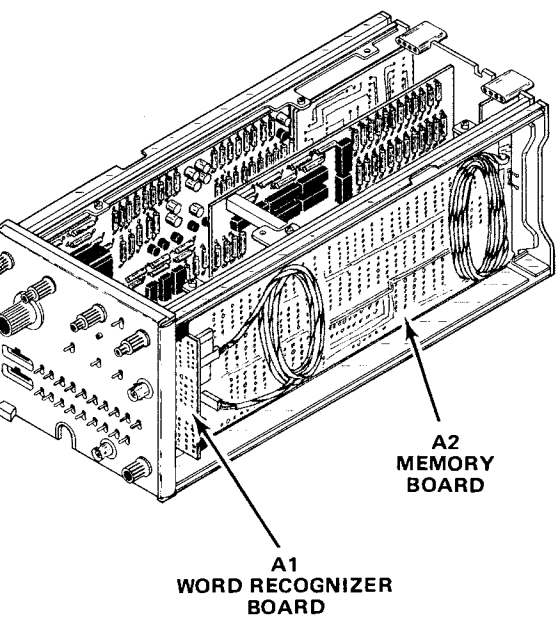

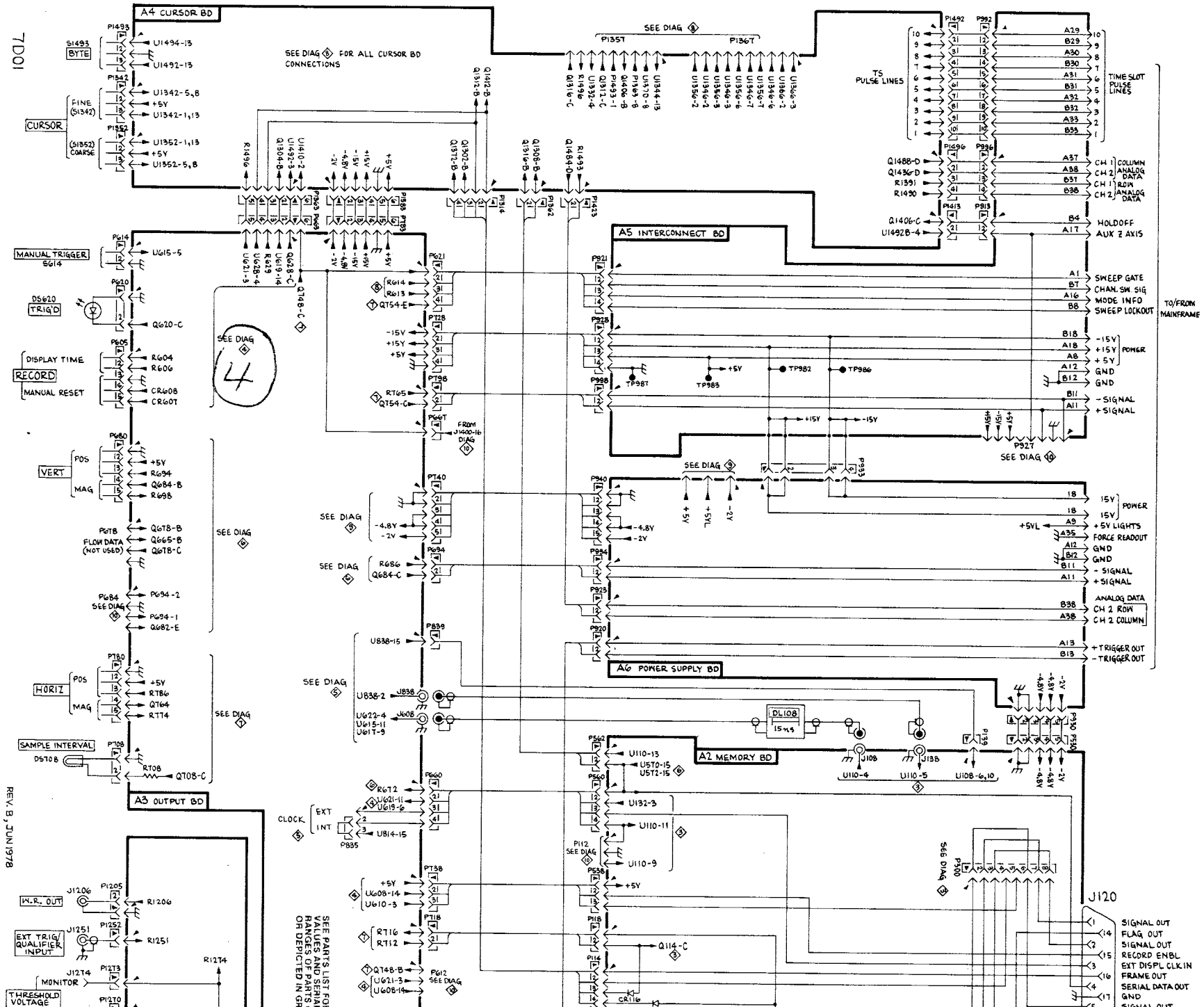
7D01
A4 CURSOR BD
SEE DIAG 8 FOR ALL CURSOR BD CONNECTIONS
BYTE
CURSOR
FINE (S1342)
COARSE (S1352)
MANUAL TRIGGER S614
DS620 TRIG'D
DISPLAY TIME
RECORD
MANUAL RESET
VERT
POS
MAG
FLOW DATA (NOT USED)
HORIZ
SAMPLE INTERVAL
DS708
A3 OUTPUT BD
W.R. OUT
EXT TRIG/ QUALIFIER INPUT
MONITOR
THRESHOLD VOLTAGE
CLOCK
EXT
INT
SEE DIAG 4
SEE DIAG 8
A5 INTERCONNECT BD
A6 POWER SUPPLY BD
A2 MEMORY BD
DL108 15ns
TS PULSE LINES
TIME SLOT PULSE LINES
COLUMN ANALOG DATA
ROW ANALOG DATA
HOLDOFF
AUX Z AXIS
SWEEP GATE
CHAN. SW SIG
MODE INFO
SWEEP LOCKOUT
POWER
GND
- SIGNAL
+ SIGNAL
+ 5V LIGHTS
FORCE READOUT
ANALOG DATA
CH 2 ROW
CH 2 COLUMN
+ TRIGGER OUT
- TRIGGER OUT
TO/FROM MAINFRAME
J120
SIGNAL OUT
FLAG OUT
SIGNAL OUT
RECORD ENBL
EXT DISPL CLK IN
FRAME OUT
SERIAL DATA OUT
GND
SIGNAL OUT
SEE PARTS LIST FOR VALUES AND SERIAL RANGES OF PARTS OR DEPICTED IN GR
REV. B, JUN 1978

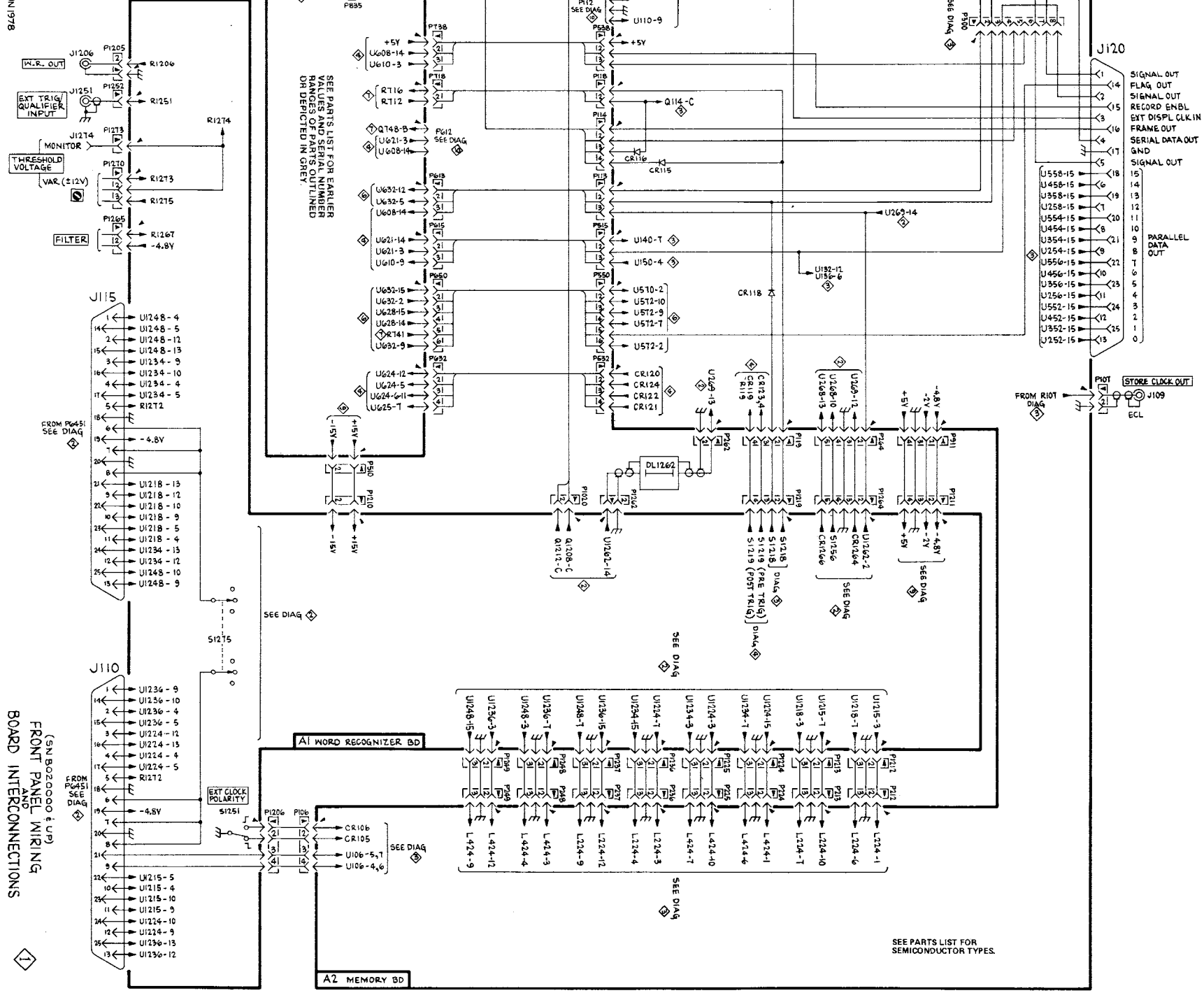

(SN B020000 & UP)
FRONT PANEL WIRING AND BOARD INTERCONNECTIONS

JUN 1978

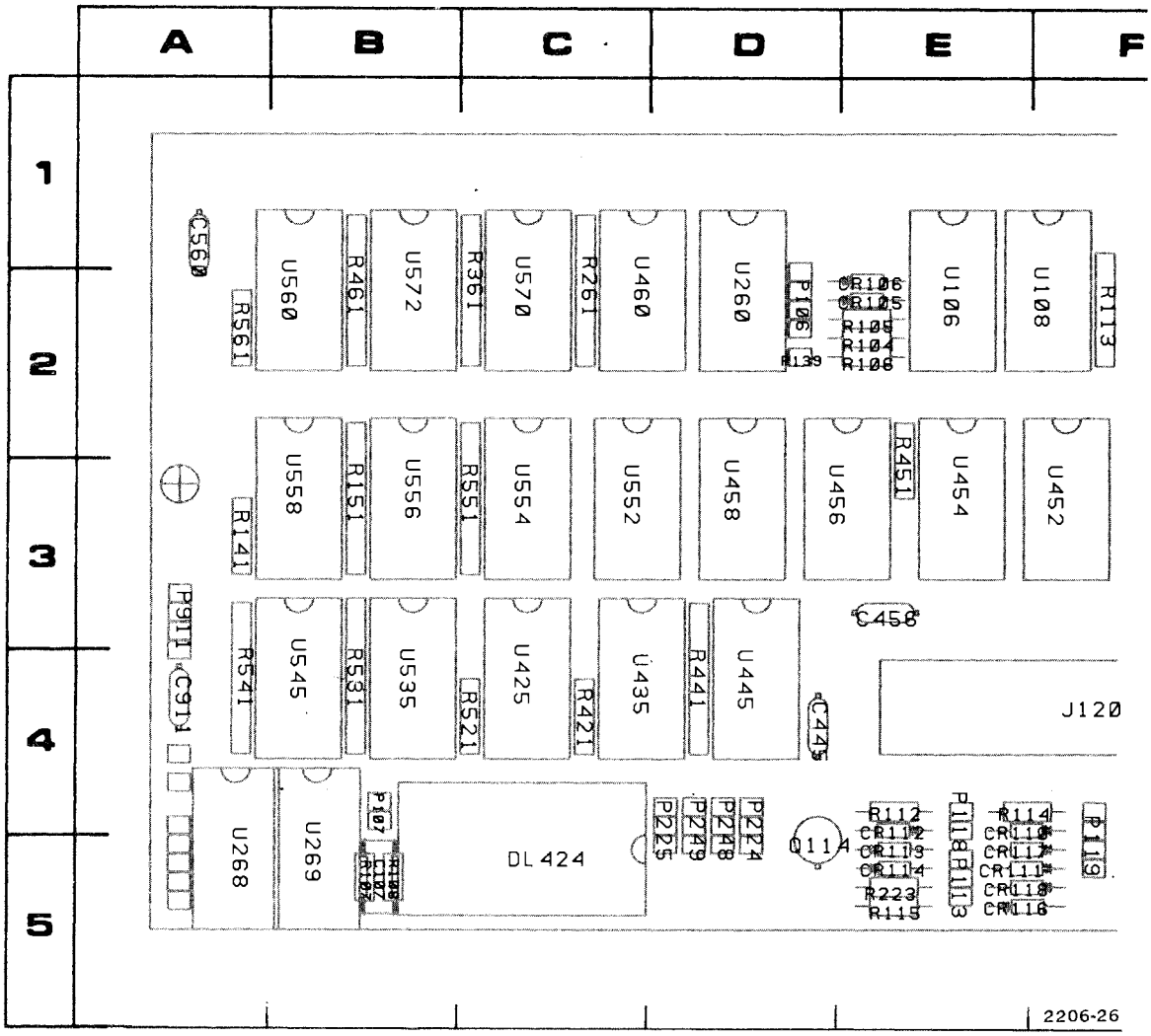

COMPONENT LOCATIONS AS VIEWED WITH BOARD INSTALLED. FOR VIEW OF COMPONENT SIDE OF BOARD, SEE FIGURE 8-3 IN THIS SECTION.

Figure 8-6. Partial A2—Memory circuit board. Component locations as viewed with board installed.

CKT NO	GRID COORD	CKT NO	GRID COORD	CKT NO	GRID COORD	CKT NO	GRID COORD	CKT NO	GRID COORD	CKT NO	GRID COORD	CKT NO	GRID COORD
C107	5B	CR118	5E	P139	2D	R108	5B	R361	2C	U235	4I	U460	2C
C110	2G	CR119	5G	P212	5J	R111	2G	R421	4C	U245	4J	U535	4B
C130	1G	CR120	4F	P213	5J	R112	4E	R441	4D	U252	3J	U545	4B
C150	1I	CR121	5G	P224	4D	R113	2F	R451	3E	U254	3J	U552	3C
C252	3K	CR122	5F	P225	4D	R114	4E	R461	2B	U256	3I	U554	3C
C356	3F	CR123	4G	P236	5J	R115	5E	R521	4C	U258	3H	U556	3B
C445	4D	CR124	5F	P237	5J	R119	5G	R531	4B	U260	2D	U558	3B
C456	3E			P248	4D	R120	4F	R541	4A	U268	5A	U560	2B
C560	1A	DL224	5I	P249	4D	R121	5G	R551	3C	U269	5B	U570	2C
C911	4A	DL424	5C	P350	4K	R122	4G	R561	2A	U335	4H	U572	2B
C935	4K			P532	5G	R125	5F			U345	4H		
		J108	1G	P538	4H	R141	3A	U106	2E	U352	3H		
CR105	2E	J120	4F	P550	1K	R150	2J	U108	2F	U354	3G		
CR106	2E	J138	2G	P911	3A	R151	3B	U110	2F	U356	3G		
CR110	4E					R221	4I	U120	2H	U358	3F		
CR111	5E	P106	2D	Q112	5G	R223	5E	U130	2G	U425	4C		
CR112	4E	P107	4B	Q114	5D	R241	4J	U132	2H	U435	4C		
CR113	5E	P112	3K			R251	3J	U132	2H	U445	4D		
CR114	5E	P113	5E	R104	2E	R261	2C	U136	2I	U452	3F		
CR115	5F	P114	4H	R105	2E	R321	4H	U140	2J	U454	3E		
CR116	5E	P118	4E	R106	2E	R341	4H	U150	2I	U456	3D		
CR117	5E	P119	5F	R107	5B	R351	3H	U225	4I	U458	3D		

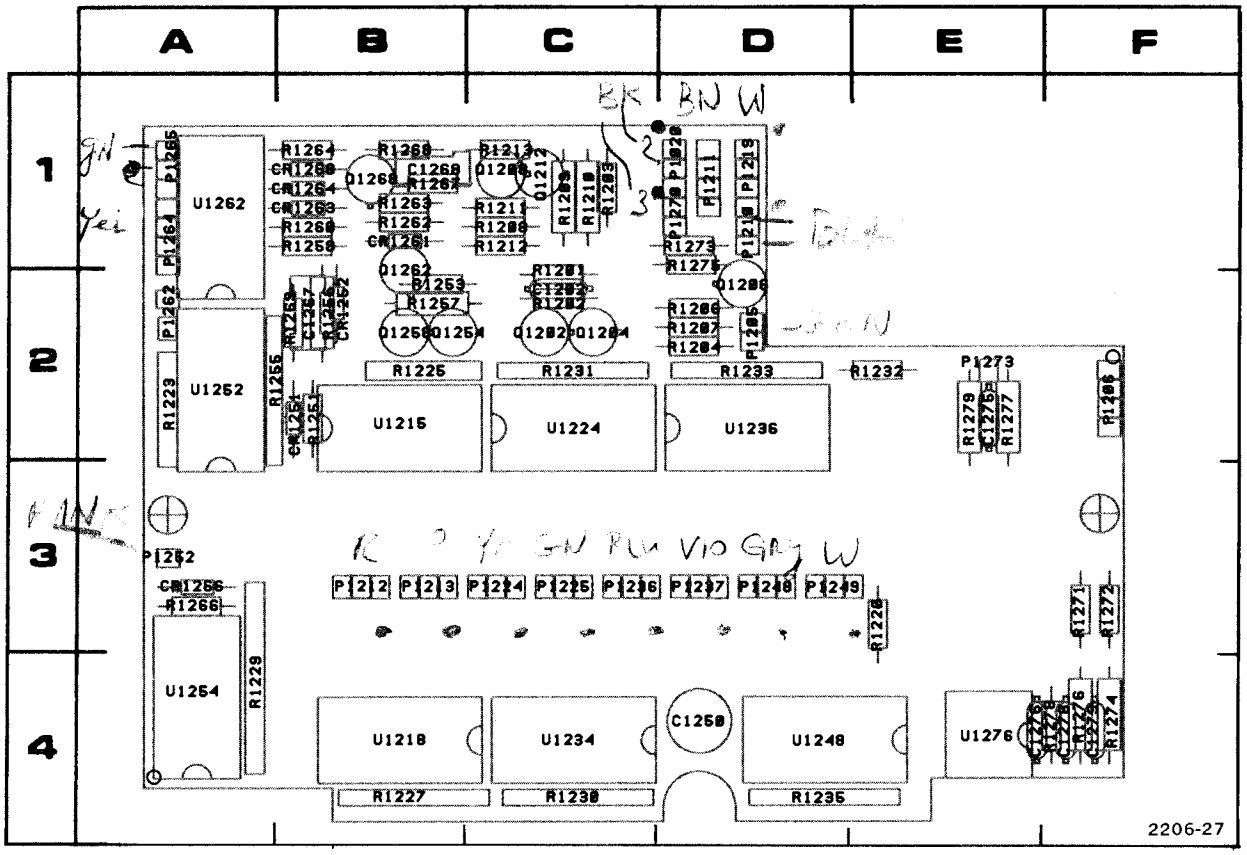

Figure 8-7. A1—Word Recognizer circuit board component locations.

CKT NO	GRID COORD	CKT NO	GRID COORD	CKT NO	GRID COORD	CKT NO	GRID COORD
C1202	2C	P1236	3C			R1263	1B
C1250	4D	P1237	3D	R1207	2D	R1264	1B
C1267	2B	P1248	3D	R1208	1C	R1266	3A
C1268	1B	P1249	3D	R1209	1C	R1267	1B
C1275	2E	P1252	3A	R1210	1C	R1271	3F
C1276	4E	P1262	2A	R1211	1C	R1272	3F
C1278	4F	P1264	1A	R1212	1C	R1273	1D
C1279	4F	P1265	1A	R1213	1C	R1274	4F
		P1270	1D	R1220	3E	R1275	1D
CR1251	2B	P1273	2E	R1223	2A	R1276	4F
CR1252	2B			R1225	2B	R1277	2E
CR1261	1B	Q1202	2C	R1227	4B	R1278	4F
CR1263	1B	Q1204	2C	R1229	4A	R1279	2E
CR1264	1B	Q1206	2D	R1230	4C		
CR1266	3A	Q1208	1C	R1231	2C	U1215	2B
CR1268	1B	Q1212	1C	R1232	2E	U1218	4B
P1020	1D	Q1254	2B	R1233	2D	U1224	2C
P1205	2D	Q1258	2B	R1235	4D	U1236	2D
P1206	2F	Q1262	2B	R1250	1B	U1240	4D
P1210	1D	Q1268	1B	R1251	2B	U1252	2A
P1211	1D			R1253	2B	U1254	4A
P1212	3B	R1200	1C	R1255	2A	U1262	1A
P1213	3B	R1201	2C	R1256	2B	U1276	4E
P1219	1D	R1202	2C	R1257	2B		
P1224	3C	R1203	1C	R1260	1B		
P1225	3C	R1204	2D	R1262	1B		

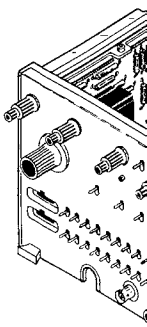

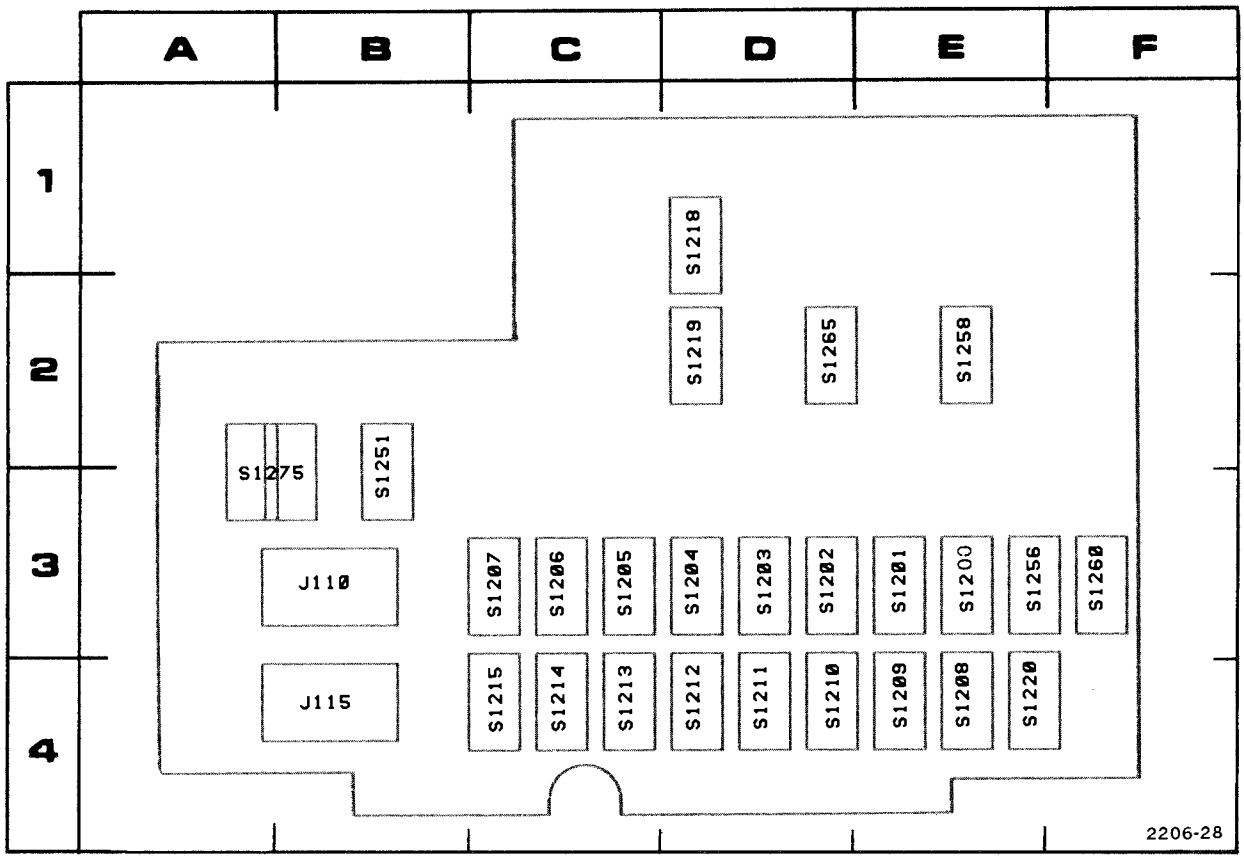

Figure 8-8. A1—Word Recognizer circuit board. Switch locations as viewed from front panel of instrument.

CKT NO	GRID COORD	CKT NO	GRID COORD
J115	4B	S1211	4D
J110	3B	S1212	4D
		S1213	4C
S1200	3E	S1214	4C
S1201	3E	S1215	4C
S1202	3D	S1218	1D
S1203	3D	S1219	2D
S1204	3D	S1220	4E
S1205	3C	S1251	3B
S1206	3C	S1256	3E
S1207	3C	S1258	2E
S1208	4E	S1260	3F
S1209	4E	S1265	2D
S1210	4D	S1275	3A

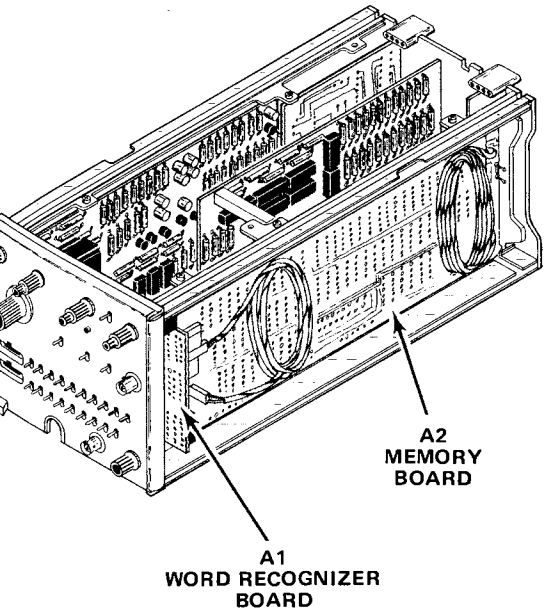

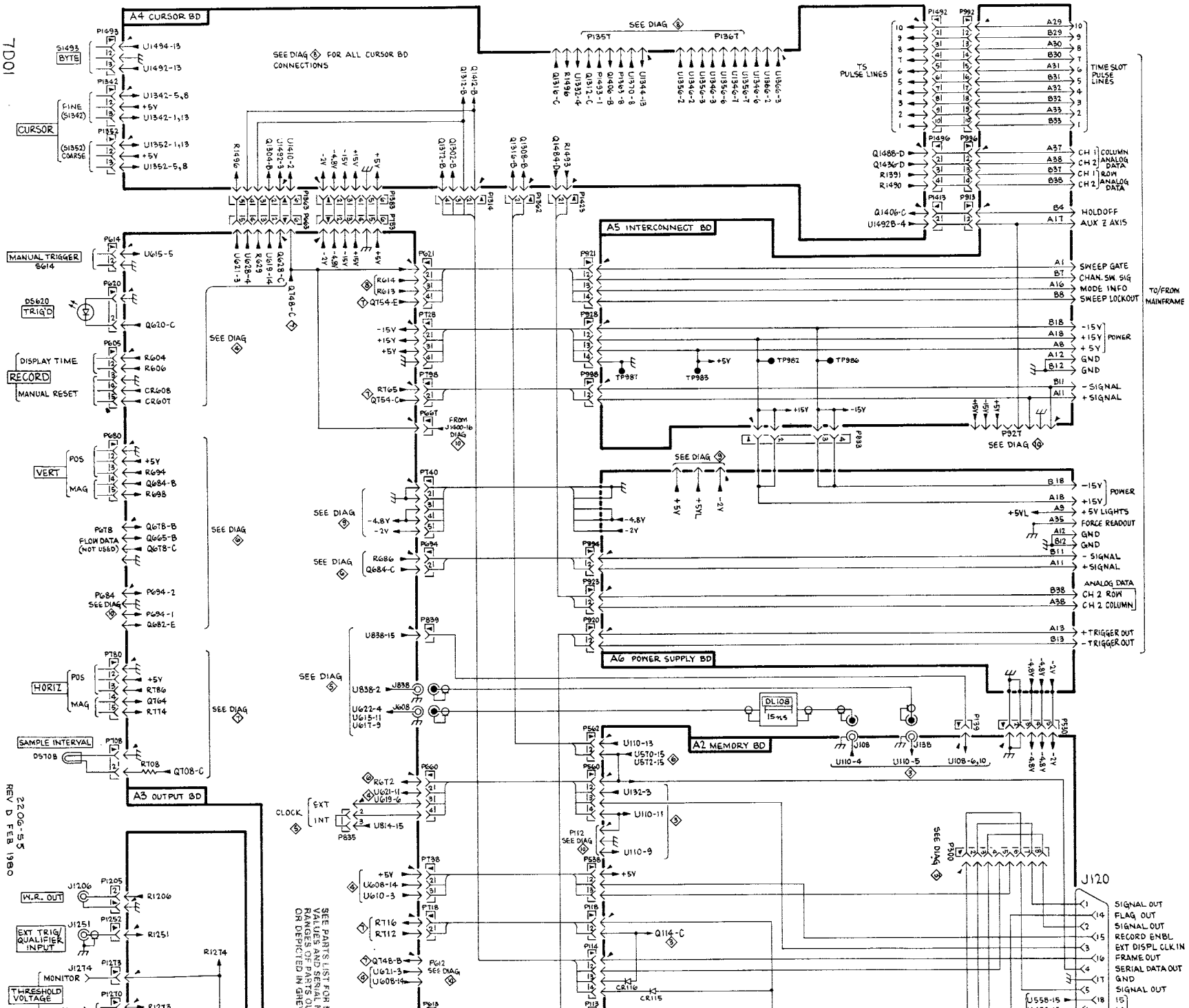
7D01
A4 CURSOR BD
SEE DIAG 8 FOR ALL CURSOR BD CONNECTIONS
CURSOR
S1493 BYTE
FINE (S1342)
(S1352) COARSE
MANUAL TRIGGER S614
DS620 TRIG'D
DISPLAY TIME
RECORD
MANUAL RESET
VERT
POS
MAG
FLOW DATA (NOT USED)
HORIZ
SAMPLE INTERVAL
DS708
A3 OUTPUT BD
W.R. OUT
EXT TRIG/ QUALIFIER INPUT
MONITOR
THRESHOLD VOLTAGE
CLOCK
EXT
INT
SEE DIAG 8
SEE DIAG 9
SEE DIAG 10
SEE DIAG 7
SEE DIAG 6
SEE DIAG 5
SEE DIAG 4
SEE DIAG 3
SEE DIAG 2
SEE DIAG 1
FROM J1400-16 DIAG 10
A5 INTERCONNECT BD
TS PULSE LINES
TIME SLOT PULSE LINES
COLUMN ANALOG DATA
ROW ANALOG DATA
HOLDOFF
AUX Z AXIS
SWEEP GATE
CHAN. SW. SIG
MODE INFO
SWEEP LOCKOUT
POWER
GND
- SIGNAL
+ SIGNAL
TO/FROM MAINFRAME
SEE DIAG 16
+5V LIGHTS
FORCE READOUT
ANALOG DATA
CH 2 ROW
CH 2 COLUMN
+ TRIGGER OUT
- TRIGGER OUT
A6 POWER SUPPLY BD
A2 MEMORY BD
DL108
15 ns
J120
SIGNAL OUT
FLAG OUT
SIGNAL OUT
RECORD ENBL
EXT DISPL CLK IN
FRAME OUT
SERIAL DATA OUT
GND
SIGNAL OUT
SEE PARTS LIST FOR VALUES AND SERIAL RANGES OF PARTS OMITTED OR DEPICTED IN GREY
2206-53
REV D FEB 1980

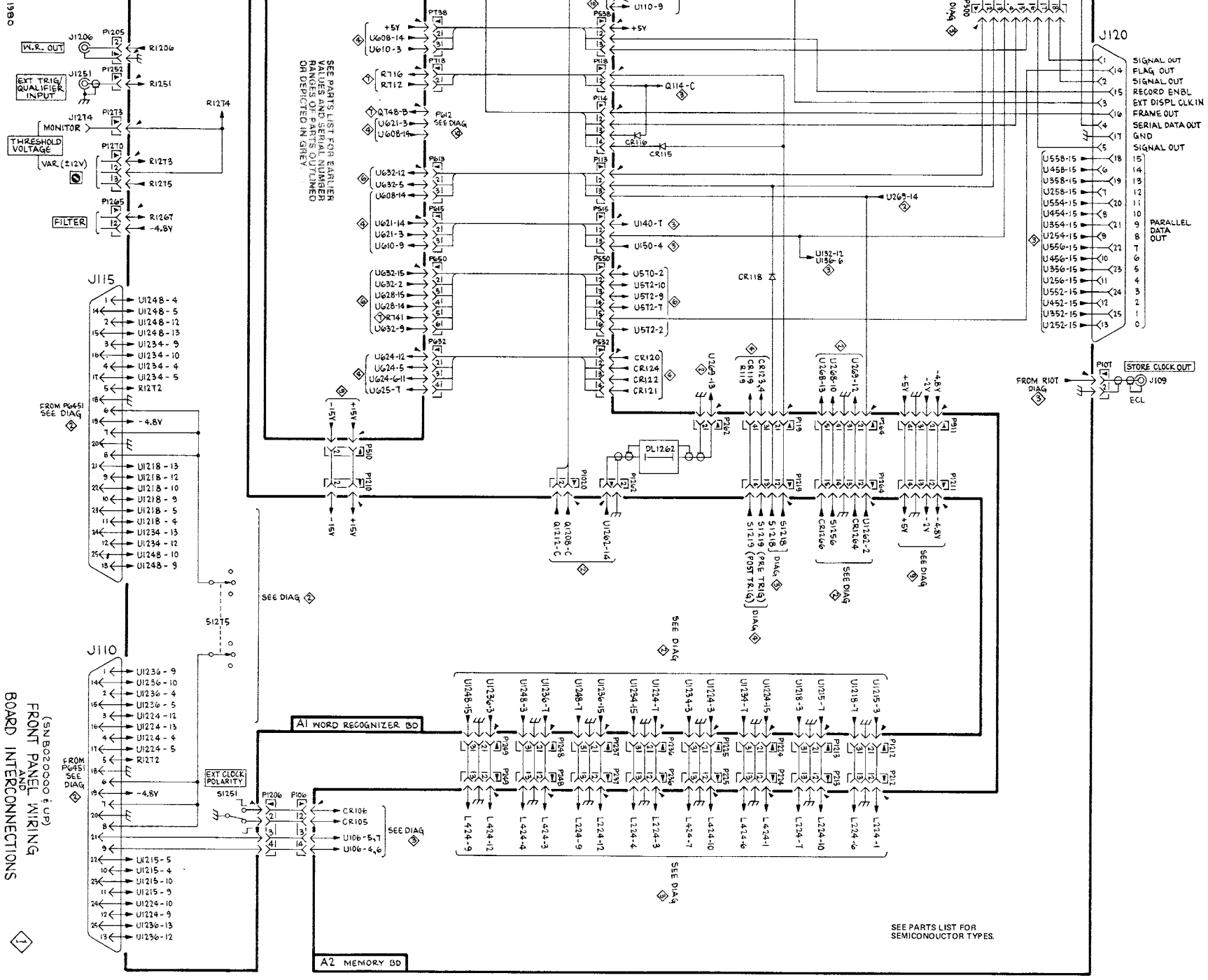
FRONT PANEL WIRING AND BOARD INTERCONNECTIONS
(SN B020000 & UP)
J120
SIGNAL OUT
FLAG OUT
SIGNAL OUT
RECORD ENBL
EXT DISPL CLK IN
FRAME OUT
SERIAL DATA OUT
GND
SIGNAL OUT
PARALLEL DATA OUT
J115
J110
A1 WORD RECOGNIZER BD
A2 MEMORY BD
SEE PARTS LIST FOR EARLIER VALUES AND SERIAL NUMBER RANGES OF PARTS OUTLINED OR DEPICTED IN GREY
SEE PARTS LIST FOR SEMICONDUCTOR TYPES.
W.R. OUT
EXT TRIG/ QUALIFIER INPUT
MONITOR
THRESHOLD VOLTAGE
VAR. (±12V)
FILTER
EXT CLOCK POLARITY
STORE CLOCK OUT
FROM R10T DIAG
ECL
SEE DIAG

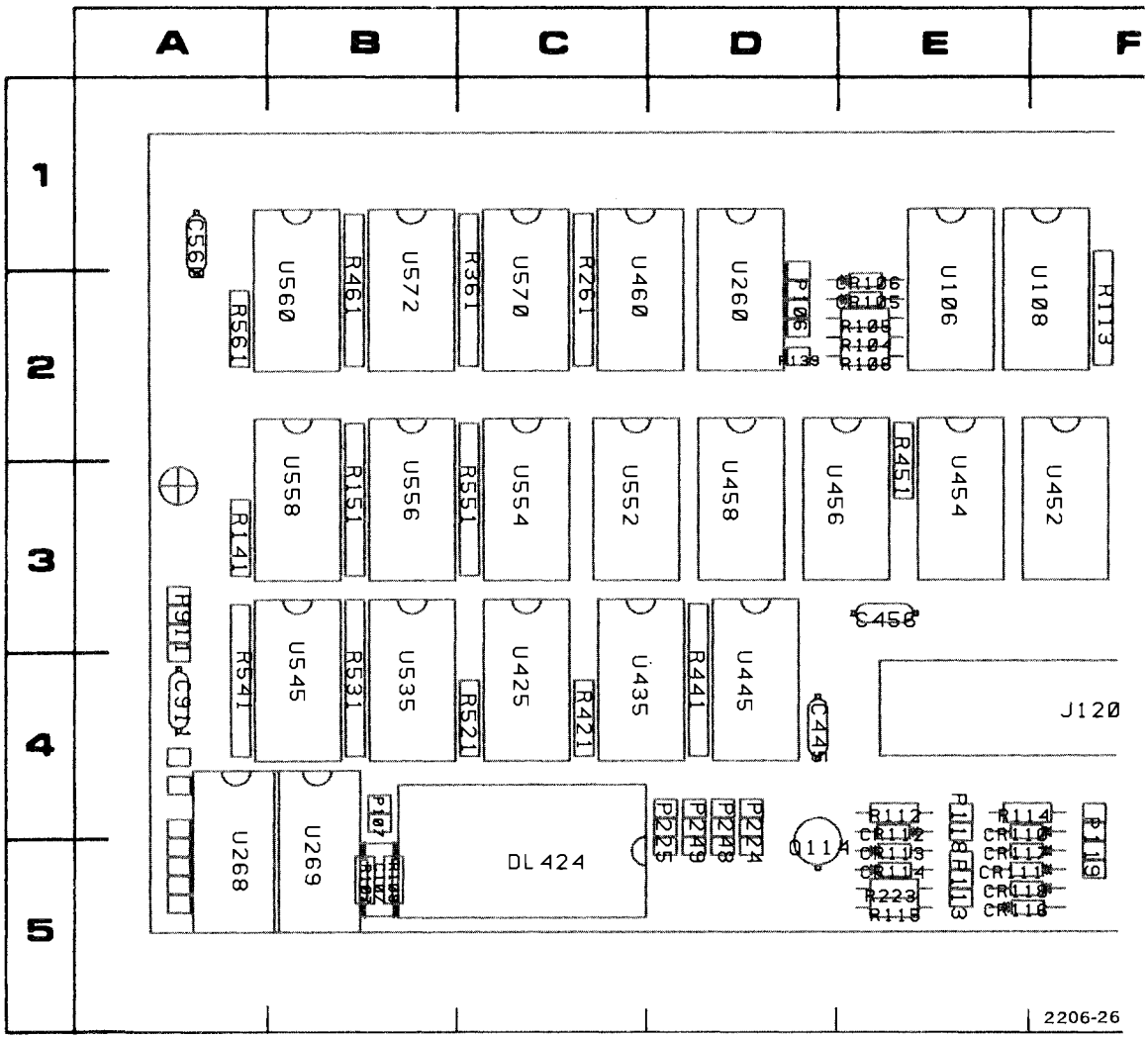

COMPONENT LOCATIONS AS VIEWED WITH BOARD INSTALLED. FOR VIEW OF COMPONENT SIDE OF BOARD, SEE FIGURE 8-3 IN THIS SECTION.

Figure 8-6. Partial A2—Memory circuit board. Component locations as viewed with board installed.

CKT NO	GRID COORD	CKT NO	GRID COORD	CKT NO	GRID COORD	CKT NO	GRID COORD	CKT NO	GRID COORD	CKT NO	GRID COORD	CKT NO	GRID COORD
C107	5B	CR118	5E	P139	2D	R108	5B	R361	2C	U235	4I	U460	2C
C110	2G	CR119	5G	P212	5J	R111	2G	R421	4C	U245	4J	U535	4B
C130	1G	CR120	4F	P213	5J	R112	4E	R441	4D	U252	3J	U545	4B
C150	1I	CR121	5G	P224	4D	R113	2F	R451	3E	U254	3J	U552	3C
C252	3K	CR122	5F	P225	4D	R114	4E	R461	2B	U256	3I	U554	3C
C356	3F	CR123	4G	P236	5J	R115	5E	R521	4C	U258	3H	U556	3B
C445	4D	CR124	5F	P237	5J	R119	5G	R531	4B	U260	2D	U558	3B
C456	3E			P248	4D	R120	4F	R541	4A	U268	5A	U560	2B
C560	1A	DL224	5I	P249	4D	R121	5G	R551	3C	U269	5B	U570	2C
C911	4A	DL424	5C	P350	4K	R122	4G	R561	2A	U335	4H	U572	2B
C935	4K			P532	5G	R125	5F			U345	4H		
		J108	1G	P538	4H	R141	3A	U106	2E	U352	3H		
CR105	2E	J120	4F	P550	1K	R150	2J	U108	2F	U354	3G		
CR106	2E	J138	2G	P911	3A	R151	3B	U110	2F	U356	3G		
CR110	4E					R221	4I	U120	2H	U358	3F		
CR111	5E	P106	2D	Q112	5G	R223	5E	U130	2G	U425	4C		
CR112	4E	P107	4B	Q114	5D	R241	4J	U132	2H	U435	4C		
CR113	5E	P112	3K			R251	3J	U132	2H	U445	4D		
CR114	5E	P113	5E	R104	2E	R261	2C	U136	2I	U452	3F		
CR115	5F	P114	4H	R105	2E	R321	4H	U140	2J	U454	3E		
CR116	5E	P118	4E	R106	2E	R341	4H	U150	2I	U456	3D		
CR117	5E	P119	5F	R107	5B	R351	3H	U225	4I	U458	3D		

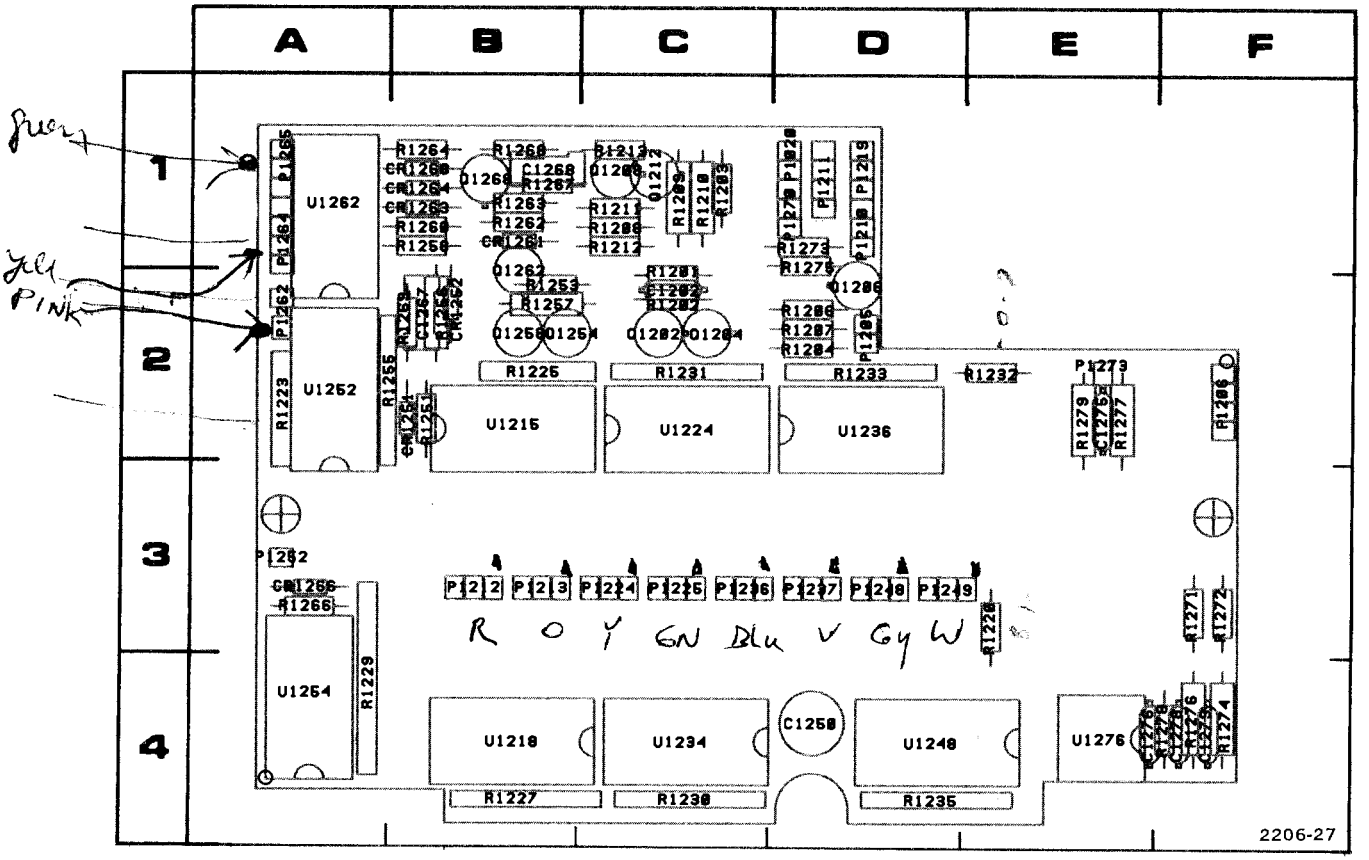

Figure 8-7. A1—Word Recognizer circuit board component locations.

CKT NO	GRID COORD	CKT NO	GRID COORD	CKT NO	GRID COORD	CKT NO	GRID COORD
C1202	2C	P1236	3C			R1263	1B
C1250	4D	P1237	3D	R1207	2D	R1264	1B
C1267	2B	P1248	3D	R1208	1C	R1266	3A
C1268	1B	P1249	3D	R1209	1C	R1267	1B
C1275	2E	P1252	3A	R1210	1C	R1271	3F
C1276	4E	P1262	2A	R1211	1C	R1272	3F
C1278	4F	P1264	1A	R1212	1C	R1273	1D
C1279	4F	P1265	1A	R1213	1C	R1274	4F
		P1270	1D	R1220	3E	R1275	1D
CR1251	2B	P1273	2E	R1223	2A	R1276	4F
CR1252	2B			R1225	2B	R1277	2E
CR1261	1B	Q1202	2C	R1227	4B	R1278	4F
CR1263	1B	Q1204	2C	R1229	4A	R1279	2E
CR1264	1B	Q1206	2D	R1230	4C		
CR1266	3A	Q1208	1C	R1231	2C	U1215	2B
CR1268	1B	Q1212	1C	R1232	2E	U1218	4B
P1020	1D	Q1254	2B	R1233	2D	U1224	2C
P1205	2D	Q1258	2B	R1235	4D	U1236	2D
P1206	2F	Q1262	2B	R1250	1B	U1240	4D
P1210	1D	Q1268	1B	R1251	2B	U1252	2A
P1211	1D			R1253	2B	U1254	4A
P1212	3B	R1200	1C	R1255	2A	U1262	1A
P1213	3B	R1201	2C	R1256	2B	U1276	4E
P1219	1D	R1202	2C	R1257	2B		
P1224	3C	R1203	1C	R1260	1B		
P1225	3C	R1204	2D	R1262	1B		

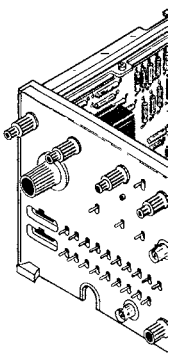

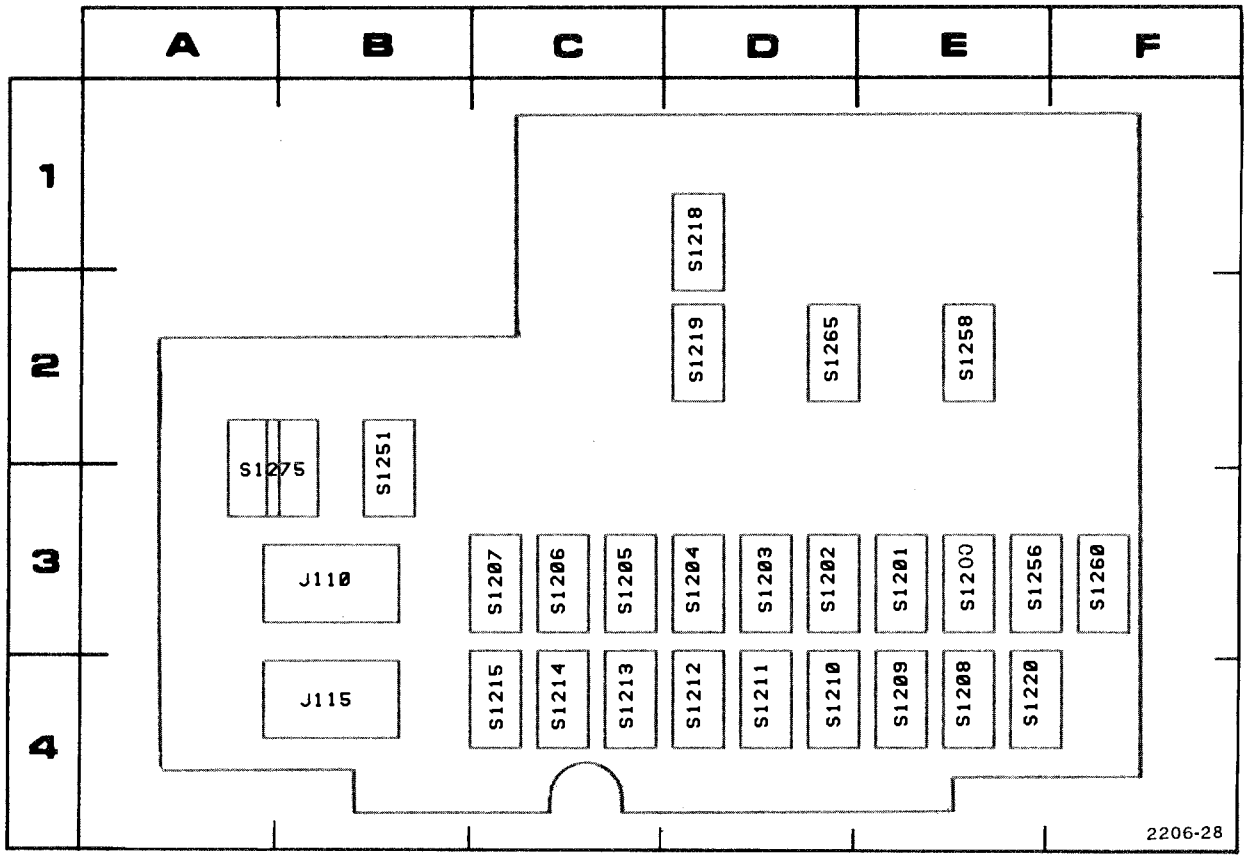

Figure 8-8. A1—Word Recognizer circuit board. Switch locations as viewed from front panel of instrument.

CKT NO	GRID COORD	CKT NO	GRID COORD
J115	4B	S1211	4D
J110	3B	S1212	4D
		S1213	4C
S1200	3E	S1214	4C
S1201	3E	S1215	4C
S1202	3D	S1218	1D
S1203	3D	S1219	2D
S1204	3D	S1220	4E
S1205	3C	S1251	3B
S1206	3C	S1256	3E
S1207	3C	S1258	2E
S1208	4E	S1260	3F
S1209	4E	S1265	2D
S1210	4D	S1275	3A

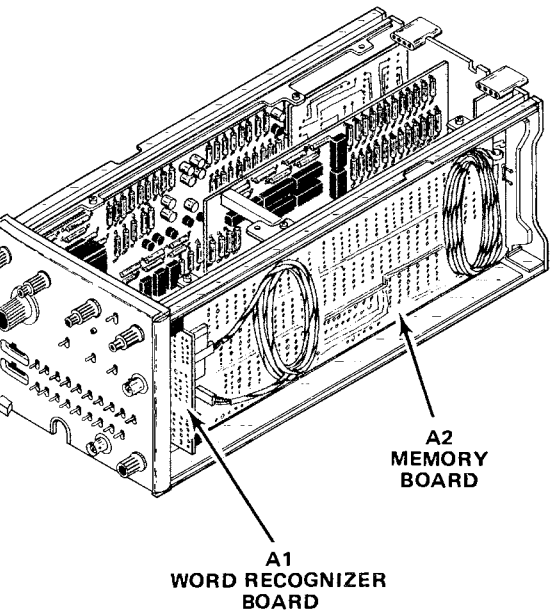

VOLTAGE AND WAVEFORM CONDITIONS

Voltages and Waveforms shown are typical, but may vary between instruments.

TEST SETUP: The 7D01 is connected to the 7000-series mainframe through two 067-0616-00 Flexible Plug-in Extenders. The 7D01 controls are set as follows:

TRIGGER SOURCE . . . . . .W.R.
WORD RECOGNIZER CH 0 . . . . . .HI

The Ch 0 probe is connected to a 1-kHz signal source, with the 7D01 THRESHOLD VOLTAGE set appropriately.

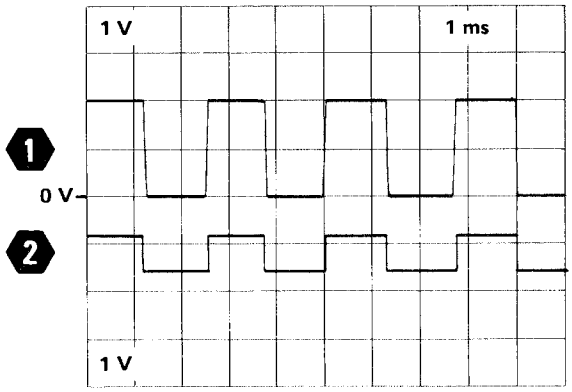

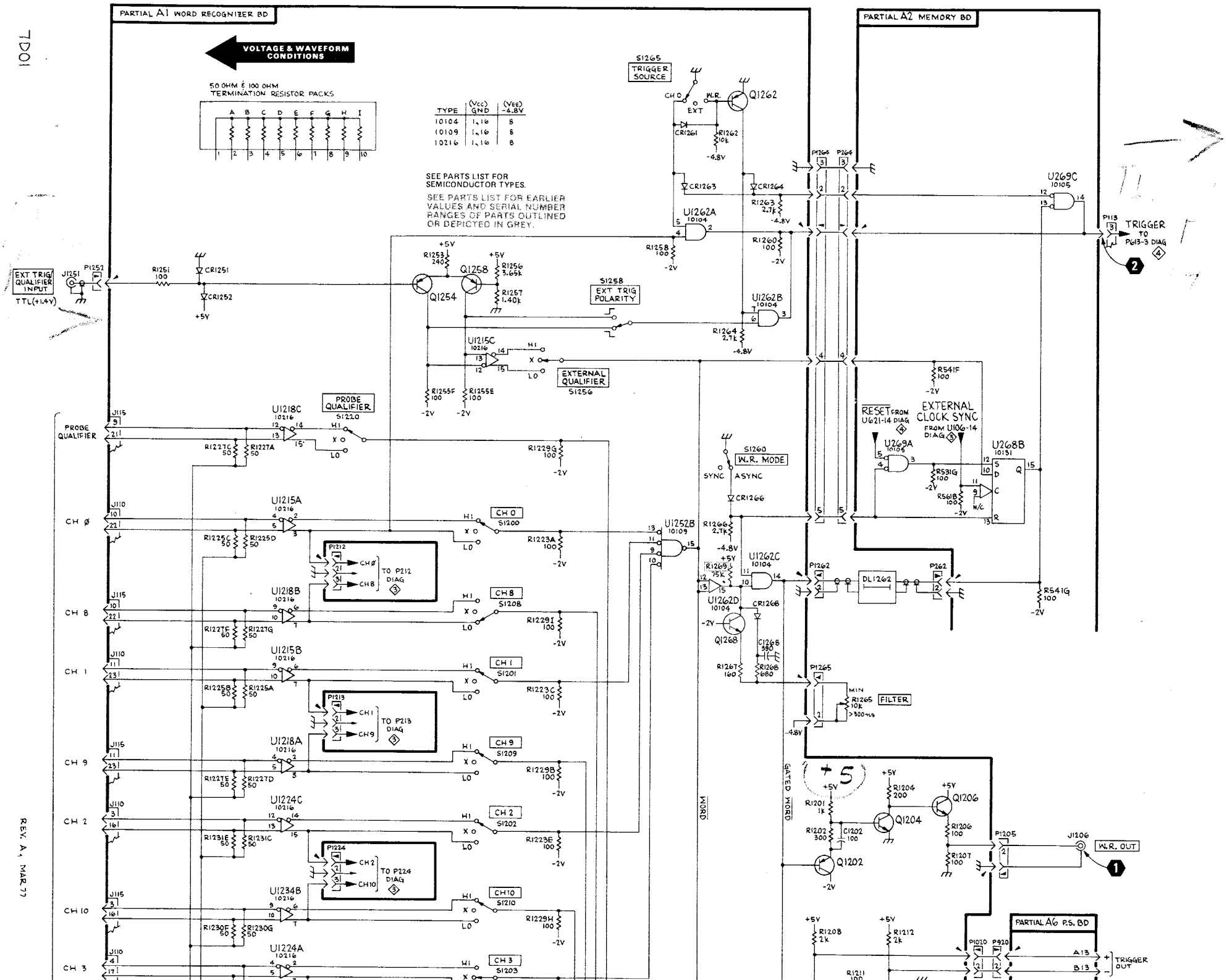
PARTIAL A1 WORD RECOGNIZER BD
PARTIAL A2 MEMORY BD
VOLTAGE & WAVEFORM CONDITIONS
50 OHM & 100 OHM TERMINATION RESISTOR PACKS
TYPE (Vcc) GND (VEE) -4.8V
10104 1,16 8
10109 1,16 8
10216 1,16 8
SEE PARTS LIST FOR SEMICONDUCTOR TYPES.
SEE PARTS LIST FOR EARLIER VALUES AND SERIAL NUMBER RANGES OF PARTS OUTLINED OR DEPICTED IN GREY.
S1265 TRIGGER SOURCE
EXT TRIG QUALIFIER INPUT
TTL(+1.4V)
S1258 EXT TRIG POLARITY
EXTERNAL QUALIFIER S1256
PROBE QUALIFIER S1220
S1260 W.R. MODE
SYNC ASYNC
RESET FROM U621-14 DIAG
EXTERNAL CLOCK SYNC FROM U106-14 DIAG
TRIGGER TO P613-3 DIAG
W.R. OUT
FILTER
GATED WORD
WORD
PARTIAL A6 P.S. BD
TRIGGER OUT
CH 0
CH 8
CH 1
CH 9
CH 2
CH 10
CH 3
TO P212 DIAG
TO P213 DIAG
TO P224 DIAG
REV. A, MAR 77

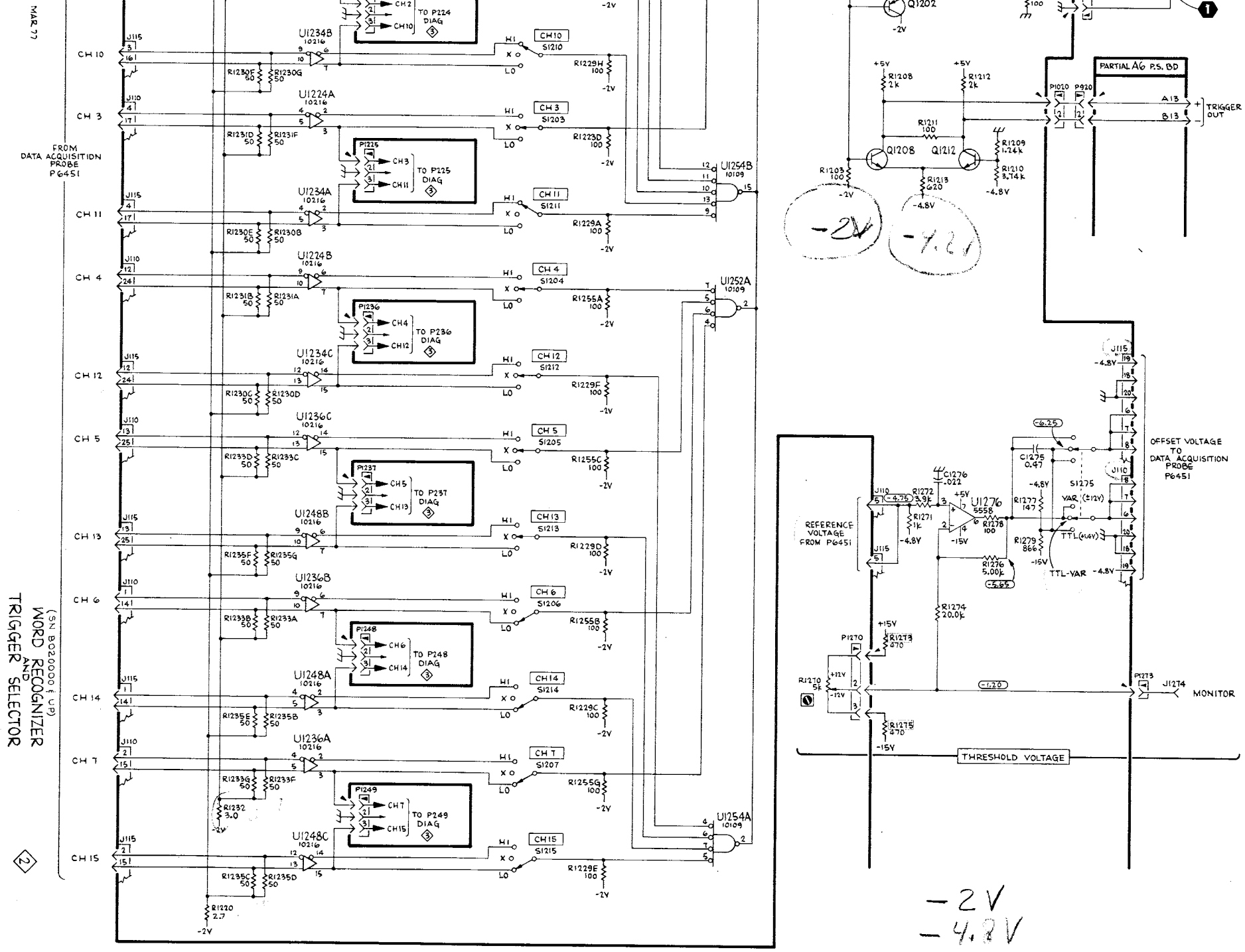

WORD RECOGNIZER & TRIGGER SOURCE SELECTOR

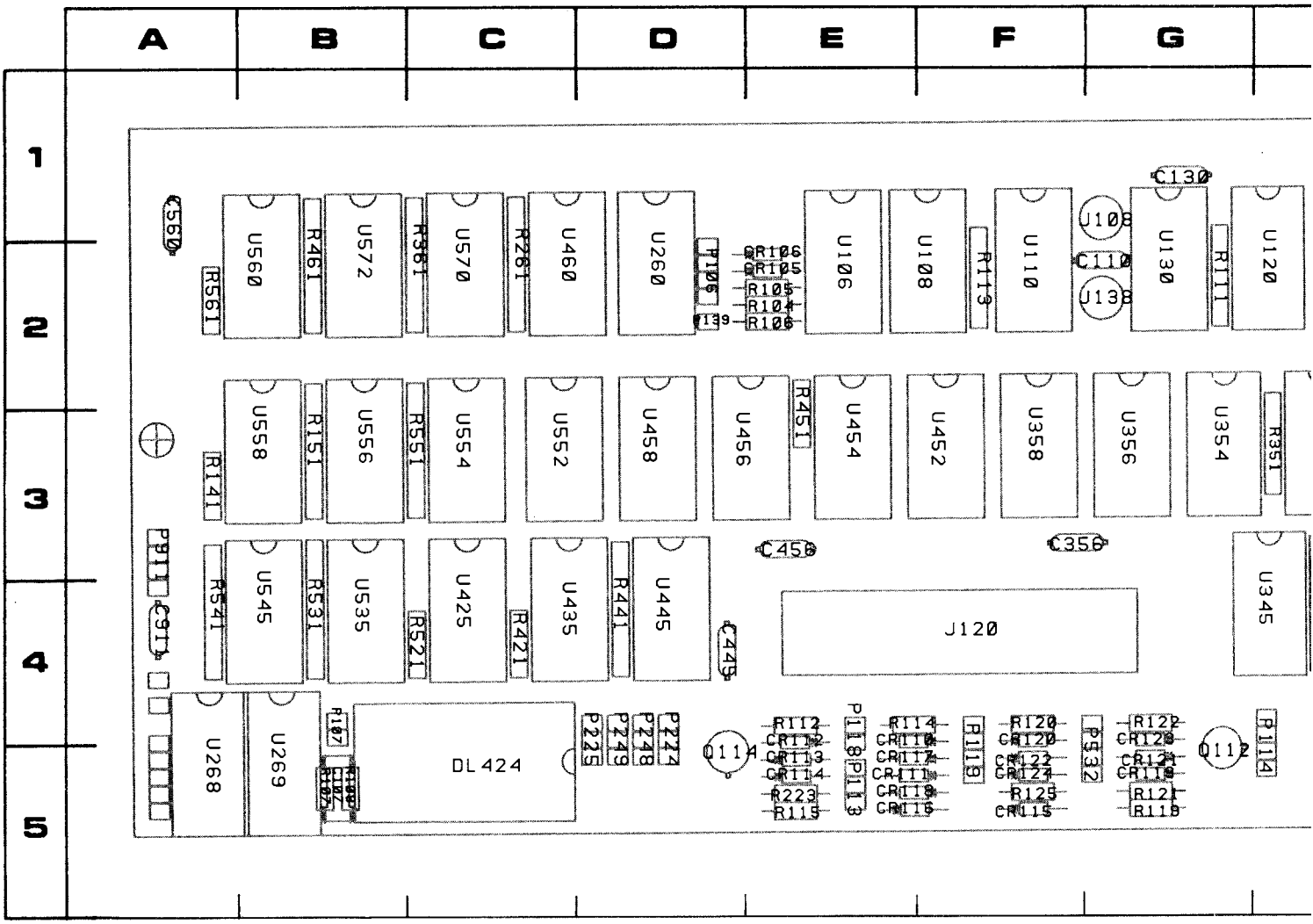

COMPONENT LOCATIONS AS VIEWED WITH BOARD INSTALLED. FOR VIEW OF COMPONENT SIDE OF BOARD, SEE FIGURE 8-3 IN THIS SECTION

Figure 8-9. A2—Memory circuit board. Component locations as viewed with board

CKT NO	GRID COORD	CKT NO	GRID COORD	CKT NO	GRID COORD	CKT NO	GRID COORD	CKT NO	GRID COORD	CKT NO
C107	5B	CR118	5E	P139	2D	R108	5B	R361	2C	U235
C110	2G	CR119	5G	P212	5J	R111	2G	R421	4C	U245
C130	1G	CR120	4F	P213	5J	R112	4E	R441	4D	U252
C150	1I	CR121	5G	P224	4D	R113	2F	R451	3E	U254
C252	3K	CR122	5F	P225	4D	R114	4E	R461	2B	U256
C356	3F	CR123	4G	P236	5J	R115	5E	R521	4C	U258
C445	4D	CR124	5F	P237	5J	R119	5G	R531	4B	U260
C456	3E			P248	4D	R120	4F	R541	4A	U268
C560	1A	DL224	5I	P249	4D	R121	5G	R551	3C	U269
C911	4A	DL424	5C	P350	4K	R122	4G	R561	2A	U335
C935	4K			P532	5G	R125	5F			U345
		J108	1G	P538	4H	R141	3A	U106	2E	U352
CR105	2E	J120	4F	P550	1K	R150	2J	U108	2F	U354
CR106	2E	J138	2G	P911	3A	R151	3B	U110	2F	U356
CR110	4E					R221	4I	U120	2H	U358
CR111	5E	P106	2D	Q112	5G	R223	5E	U130	2G	U425
CR112	4E	P107	4B	Q114	5D	R241	4J	U132	2H	U435
CR113	5E	P112	3K			R251	3J	U132	2H	U445
CR114	5E	P113	5E	R104	2E	R261	2C	U136	2I	U452
CR115	5F	P114	4H	R105	2E	R321	4H	U140	2J	U454
CR116	5E	P118	4E	R106	2E	R341	4H	U150	2I	U456
CR117	5E	P119	5F	R107	5B	R351	3H	U225	4I	U458

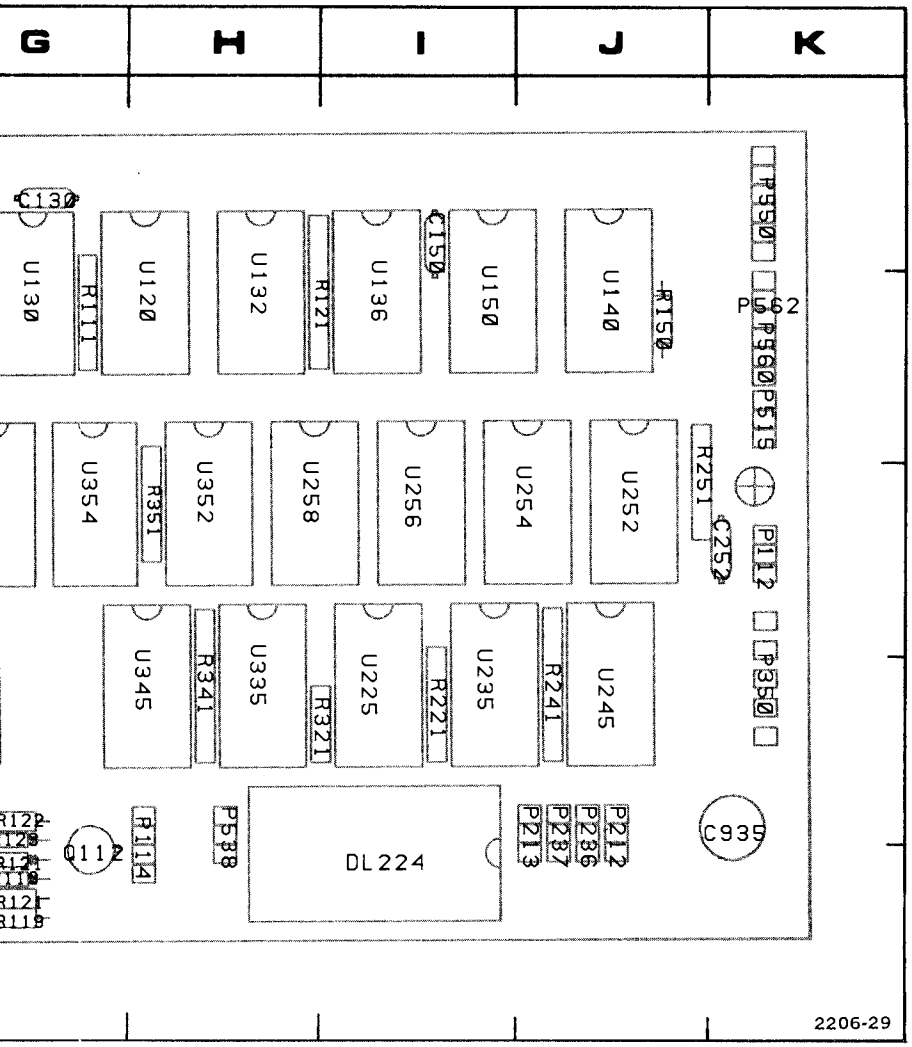

-3 IN THIS SECTION.

s as viewed with board installed.

GRID COORD	CKT NO	GRID COORD	CKT NO	GRID COORD
2C	U235	4I	U460	2C
4C	U245	4J	U535	4B
4D	U252	3J	U545	4B
3E	U254	3J	U552	3C
2B	U256	3I	U554	3C
4C	U258	3H	U556	3B
4B	U260	2D	U558	3B
4A	U268	5A	U560	2B
3C	U269	5B	U570	2C
2A	U335	4H	U572	2B
	U345	4H		
2E	U352	3H		
2F	U354	3G		
2F	U356	3G		
2H	U358	3F		
2G	U425	4C		
2H	U435	4C		
2H	U445	4D		
2I	U452	3F		
2J	U454	3E		
2I	U456	3D		
4I	U458	3D		

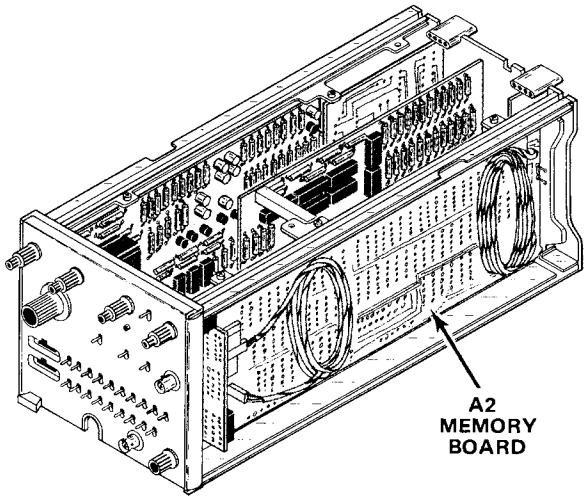

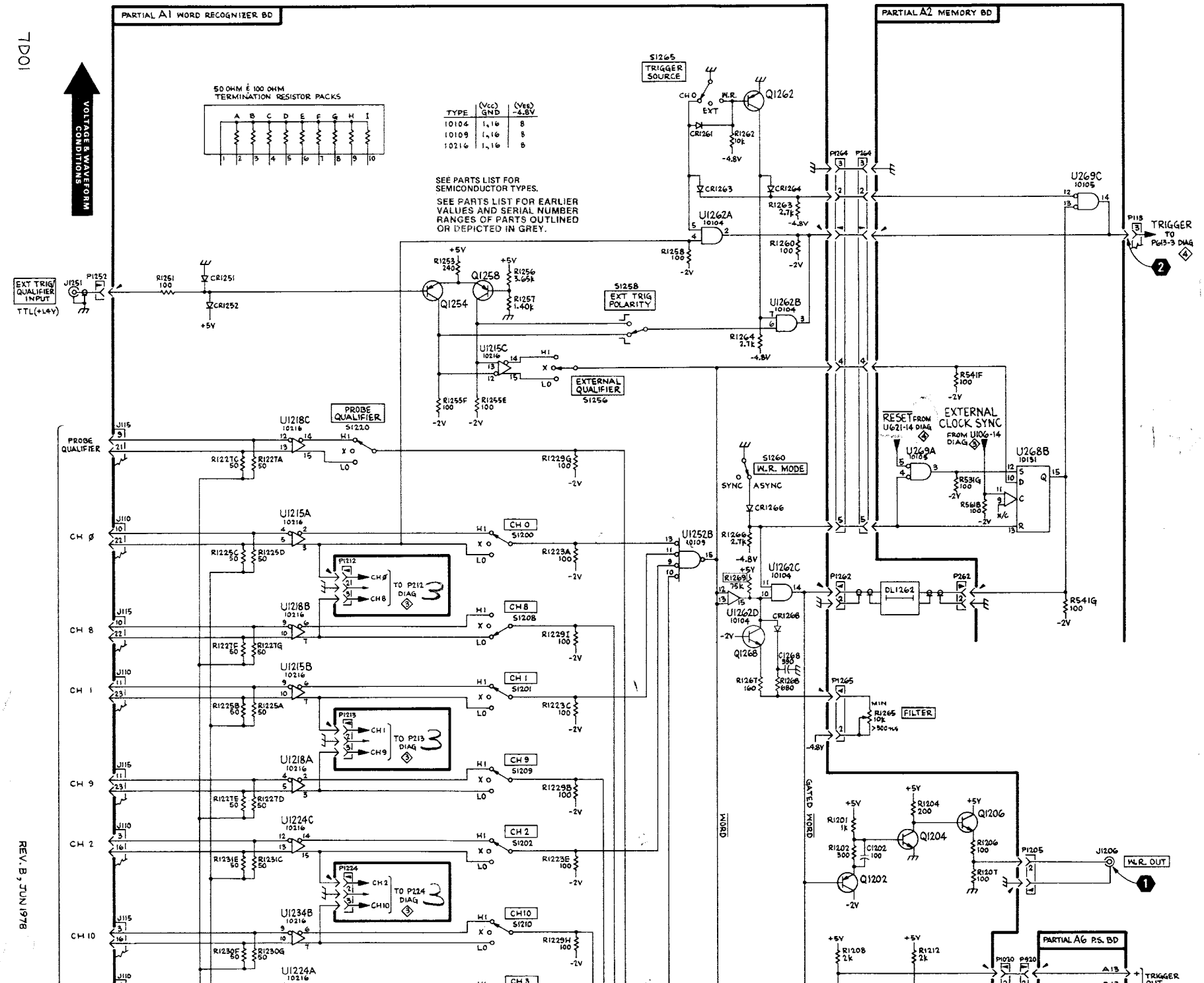
PARTIAL A1 WORD RECOGNIZER BD
PARTIAL A2 MEMORY BD
PARTIAL A6 P.S. BD
VOLTAGE & WAVEFORM CONDITIONS
50 OHM & 100 OHM TERMINATION RESISTOR PACKS
TYPE | (Vcc) GND | (VEE) -4.8V
10104 | 1,16 | 8
10109 | 1,16 | 8
10216 | 1,16 | 8
SEE PARTS LIST FOR SEMICONDUCTOR TYPES.
SEE PARTS LIST FOR EARLIER VALUES AND SERIAL NUMBER RANGES OF PARTS OUTLINED OR DEPICTED IN GREY.
S1265 TRIGGER SOURCE
EXT TRIG QUALIFIER INPUT
TTL(+1.4V)
S1258 EXT TRIG POLARITY
EXTERNAL QUALIFIER S1256
PROBE QUALIFIER S1220
S1260 W.R. MODE
SYNC ASYNC
RESET FROM U621-14 DIAG
EXTERNAL CLOCK SYNC FROM U106-14 DIAG
TRIGGER TO P613-3 DIAG
W.R. OUT
FILTER
GATED MODE
CH 0
CH 8
CH 1
CH 9
CH 2
CH 10
TO P212 DIAG
TO P213 DIAG
TO P224 DIAG

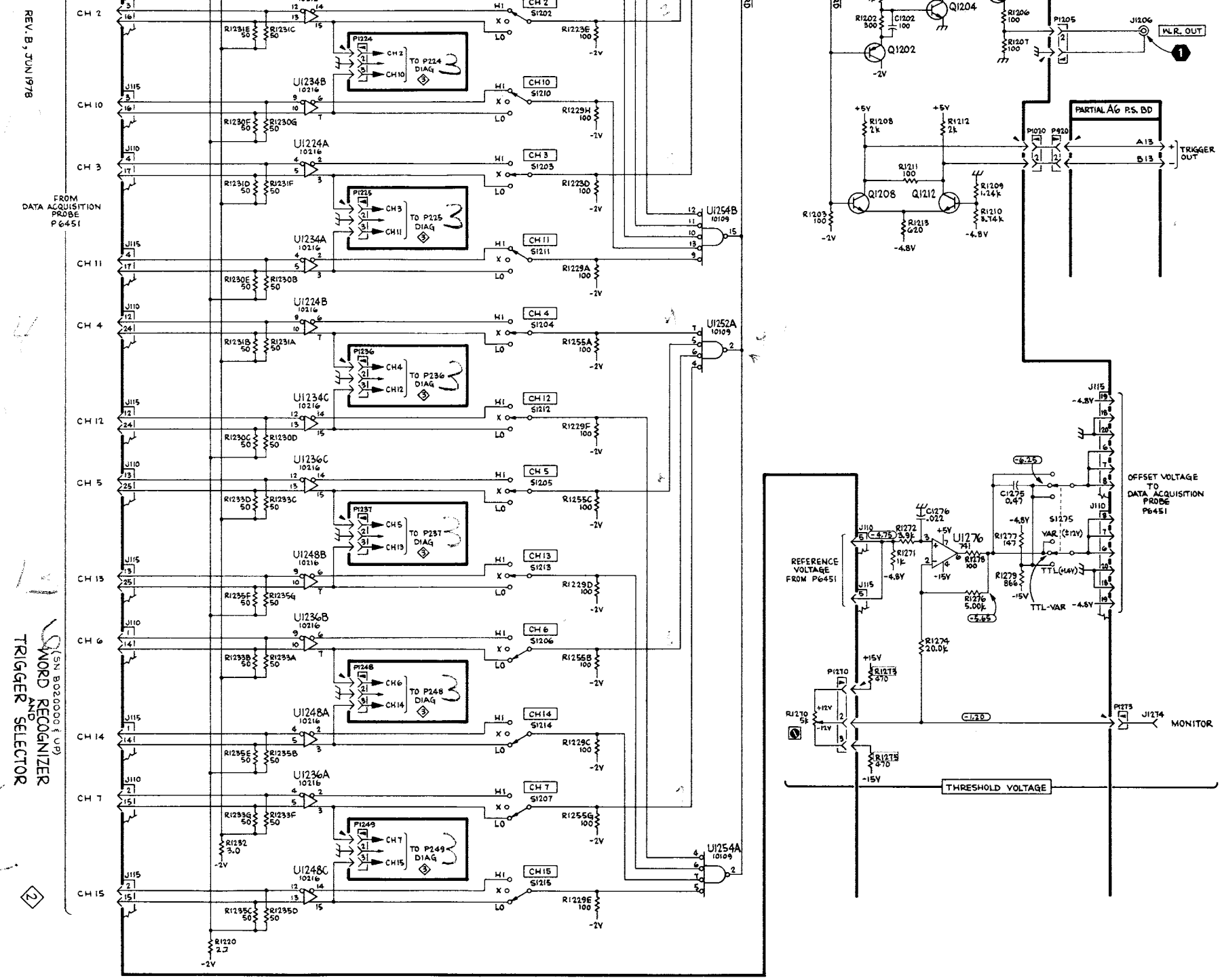
REV. B, JUN 1978
WORD RECOGNIZER AND TRIGGER SELECTOR
(SN B020000 & UP)
FROM DATA ACQUISITION PROBE P6451
CH 2
CH 10
CH 3
CH 11
CH 4
CH 12
CH 5
CH 13
CH 6
CH 14
CH 7
CH 15
U1234B
U1224A
U1234A
U1224B
U1234C
U1236C
U1248B
U1236B
U1248A
U1236A
U1248C
U1254B
U1252A
U1254A
TO P224 DIAG
TO P225 DIAG
TO P236 DIAG
TO P237 DIAG
TO P248 DIAG
TO P249 DIAG
WLR. OUT
PARTIAL A6 P.S. BD
TRIGGER OUT
OFFSET VOLTAGE TO DATA ACQUISITION PROBE P6451
REFERENCE VOLTAGE FROM P6451
MONITOR
THRESHOLD VOLTAGE
TTL-VAR
WORD RECOGNIZER & TRIGGER SOURCE SELECTOR

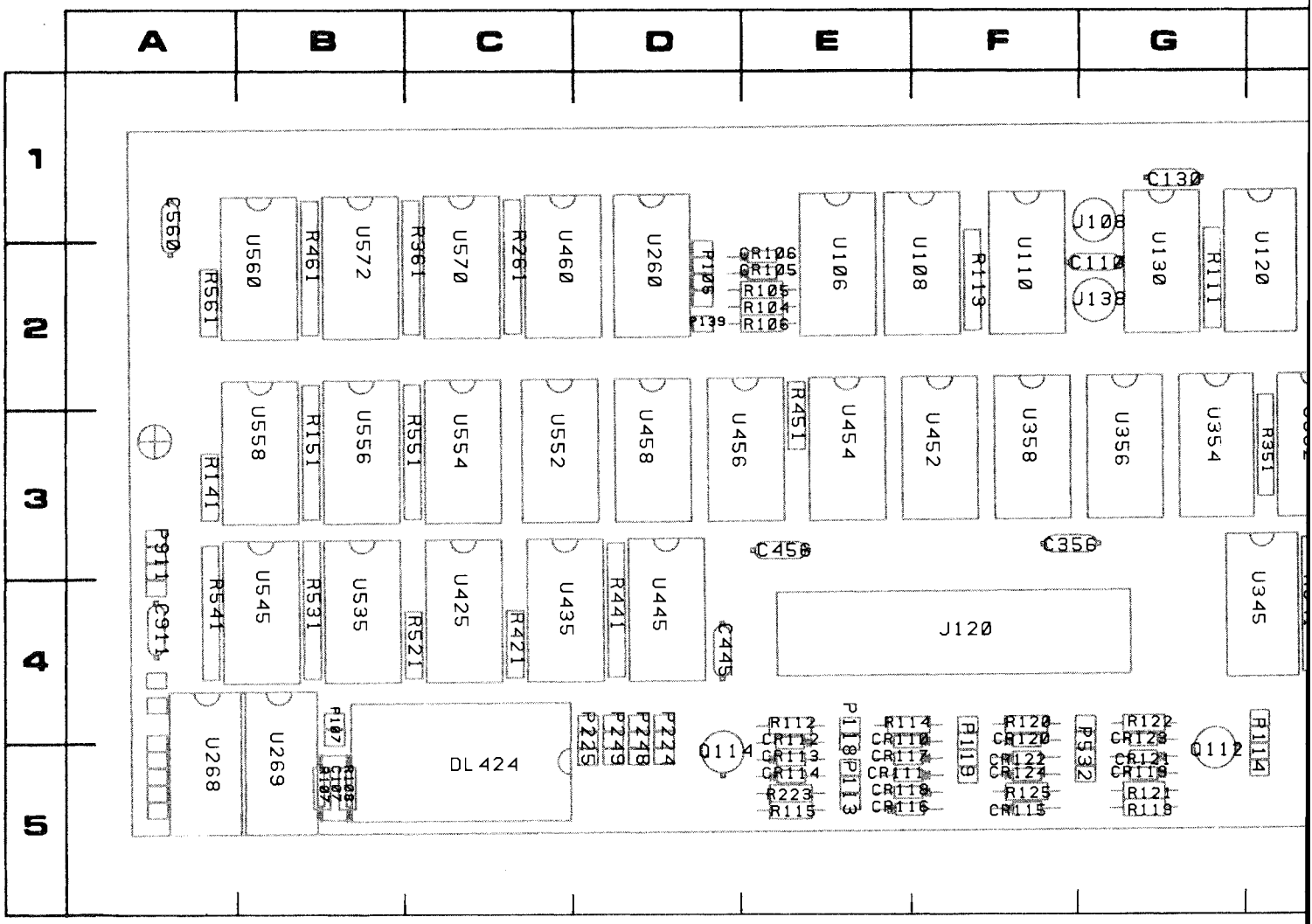

COMPONENT LOCATIONS AS VIEWED WITH BOARD INSTALLED. FOR VIEW OF COMPONENT SIDE OF BOARD, SEE FIGURE 8-3 IN THIS SECTION

Figure 8-9. A2—Memory circuit board. Component locations as viewed with board

CKT NO	GRID COORD	CKT NO	GRID COORD	CKT NO	GRID COORD	CKT NO	GRID COORD	CKT NO	GRID COORD	CKT NO
C107	5B	CR118	5E	P139	2D	R108	5B	R361	2C	U235
C110	2G	CR119	5G	P212	5J	R111	2G	R421	4C	U245
C130	1G	CR120	4F	P213	5J	R112	4E	R441	4D	U252
C150	1I	CR121	5G	P224	4D	R113	2F	R451	3E	U254
C252	3K	CR122	5F	P225	4D	R114	4E	R461	2B	U256
C356	3F	CR123	4G	P236	5J	R115	5E	R521	4C	U258
C445	4D	CR124	5F	P237	5J	R119	5G	R531	4B	U260
C456	3E			P248	4D	R120	4F	R541	4A	U268
C560	1A	DL224	5I	P249	4D	R121	5G	R551	3C	U269
C911	4A	DL424	5C	P530	4K	R122	4G	R561	2A	U335
C935	4K			P532	5G	R125	5F			U345
		J108	1G	P538	4H	R141	3A	U106	2E	U352
CR105	2E	J120	4F	P550	1K	R150	2J	U108	2F	U354
CR106	2E	J138	2G	P911	3A	R151	3B	U110	2F	U356
CR110	4E					R221	4I	U120	2H	U358
CR111	5E	P106	2D	Q112	5G	R223	5E	U130	2G	U425
CR112	4E	P107	4B	Q114	5D	R241	4J	U132	2H	U435
CR113	5E	P112	3K			R251	3J	U132	2H	U445
CR114	5E	P113	5E	R104	2E	R261	2C	U136	2I	U452
CR115	5F	P114	4H	R105	2E	R321	4H	U140	2J	U454
CR116	5E	P118	4E	R106	2E	R341	4H	U150	2I	U456
CR117	5E	P119	5F	R107	5B	R351	3H	U225	4I	U458

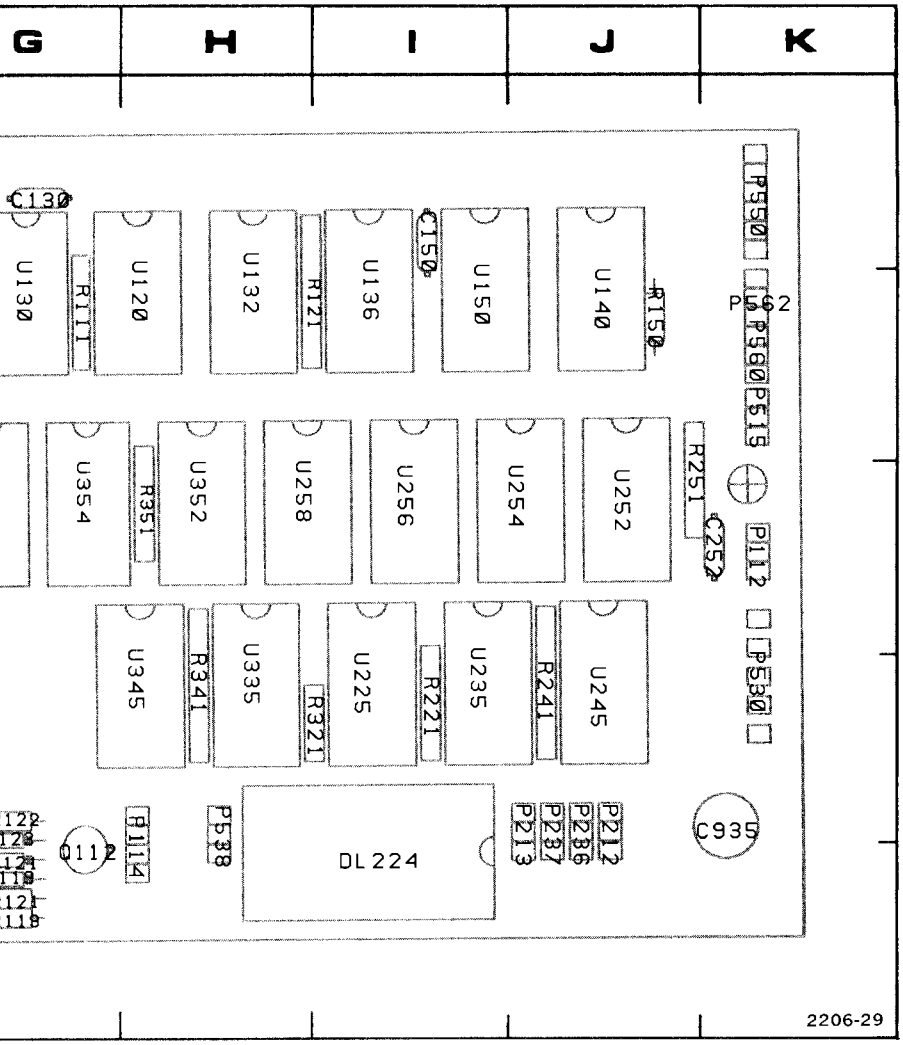

3 IN THIS SECTION.

s as viewed with board installed.

CKT NO	GRID COORD	CKT NO	GRID COORD	CKT NO	GRID COORD
	2C	U235	4I	U460	2C
	4C	U245	4J	U535	4B
	4D	U252	3J	U545	4B
	3E	U254	3J	U552	3C
	2B	U256	3I	U554	3C
	4C	U258	3H	U556	3B
	4B	U260	2D	U558	3B
	4A	U268	5A	U560	2B
	3C	U269	5B	U570	2C
	2A	U335	4H	U572	2B
		U345	4H		
	2E	U352	3H		
	2F	U354	3G		
	2F	U356	3G		
	2H	U358	3F		
	2G	U425	4C		
	2H	U435	4C		
	2H	U445	4D		
	2I	U452	3F		
	2J	U454	3E		
	2I	U456	3D		
	4I	U458	3D		

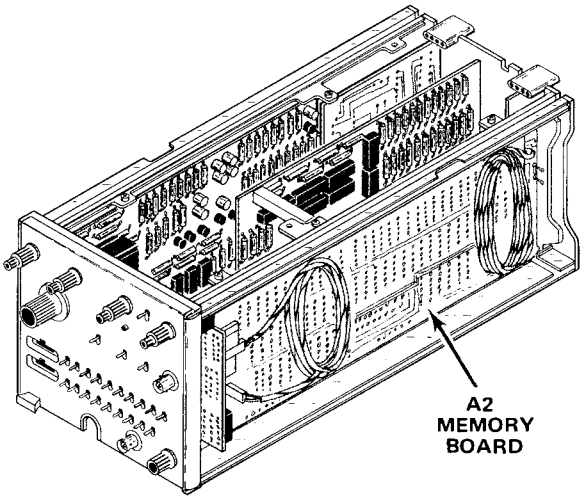

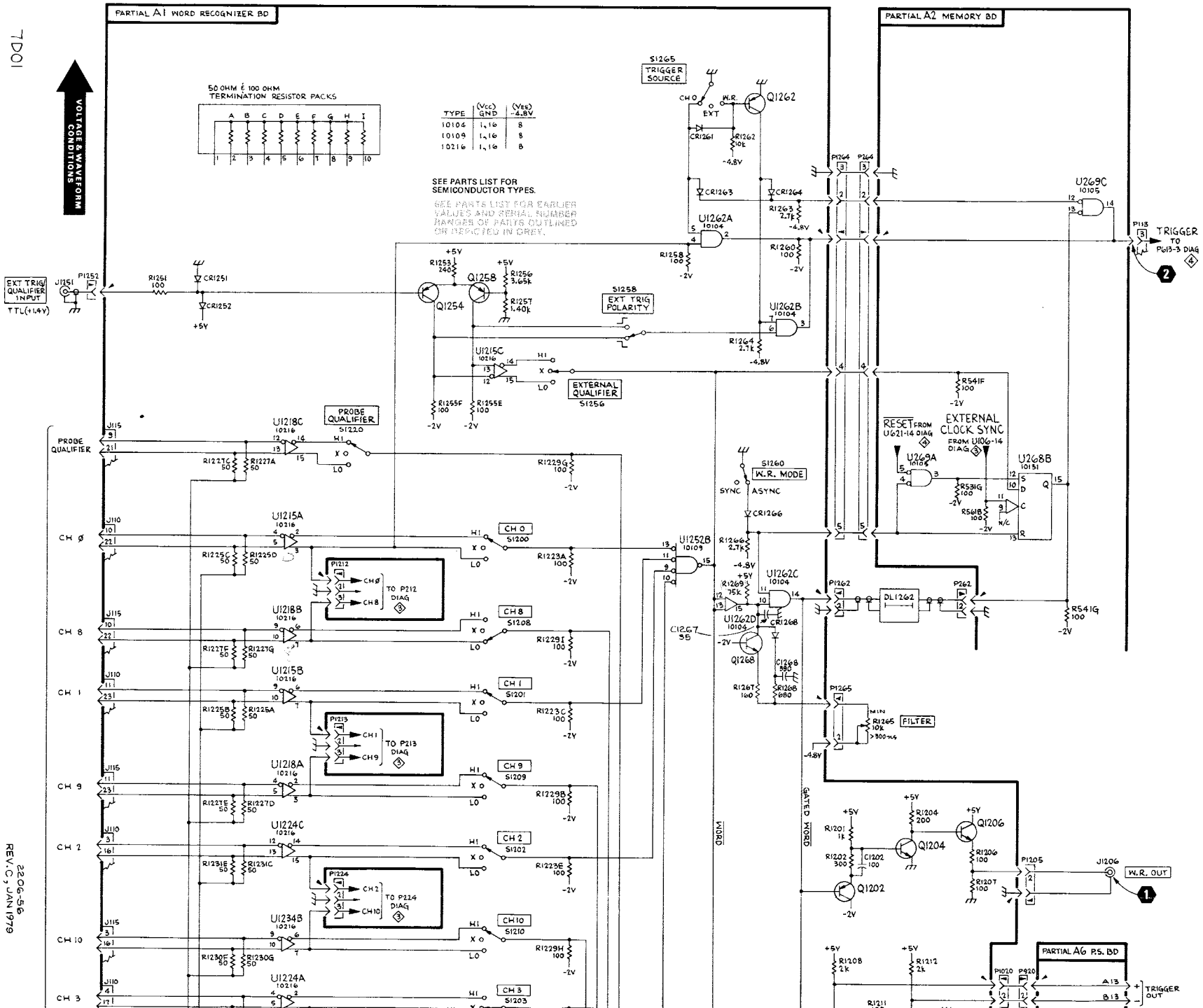
PARTIAL A1 WORD RECOGNIZER BD
PARTIAL A2 MEMORY BD
PARTIAL A6 P.S. BD
VOLTAGE & WAVEFORM CONDITIONS
50 OHM & 100 OHM TERMINATION RESISTOR PACKS
TYPE | (Vcc) GND | (Vee) -4.8V
10104 | 1,16 | 8
10109 | 1,16 | 8
10216 | 1,16 | 8
SEE PARTS LIST FOR SEMICONDUCTOR TYPES.
SEE PARTS LIST FOR EARLIER VALUES AND SERIAL NUMBER RANGES OF PARTS OUTLINED OR INDICATED IN GREY.
S1265 TRIGGER SOURCE
S1258 EXT TRIG POLARITY
EXTERNAL QUALIFIER S1256
PROBE QUALIFIER S1220
S1260 W.R. MODE
SYNC ASYNC
RESET FROM U621-14 DIAG
EXTERNAL CLOCK SYNC FROM U106-14 DIAG
EXT TRIG/ QUALIFIER INPUT
TTL(+1.4V)
TRIGGER TO P613-3 DIAG
W.R. OUT
FILTER
TRIGGER OUT
GATED WORD
WORD
CH 0
CH 8
CH 1
CH 9
CH 2
CH 10
CH 3
TO P212 DIAG
TO P213 DIAG
TO P224 DIAG

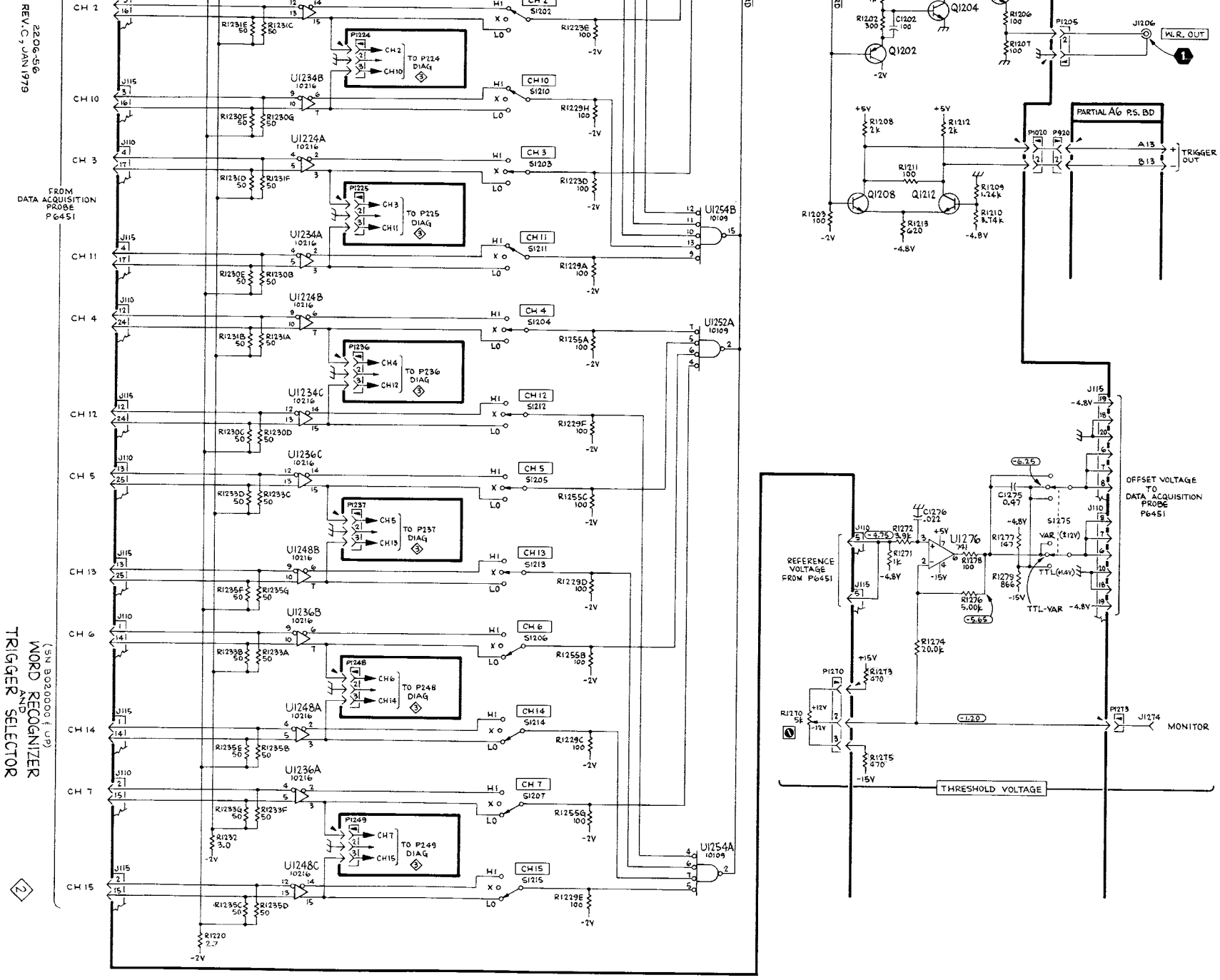

WORD RECOGNIZER & TRIGGER SOURCE SELECTOR

2

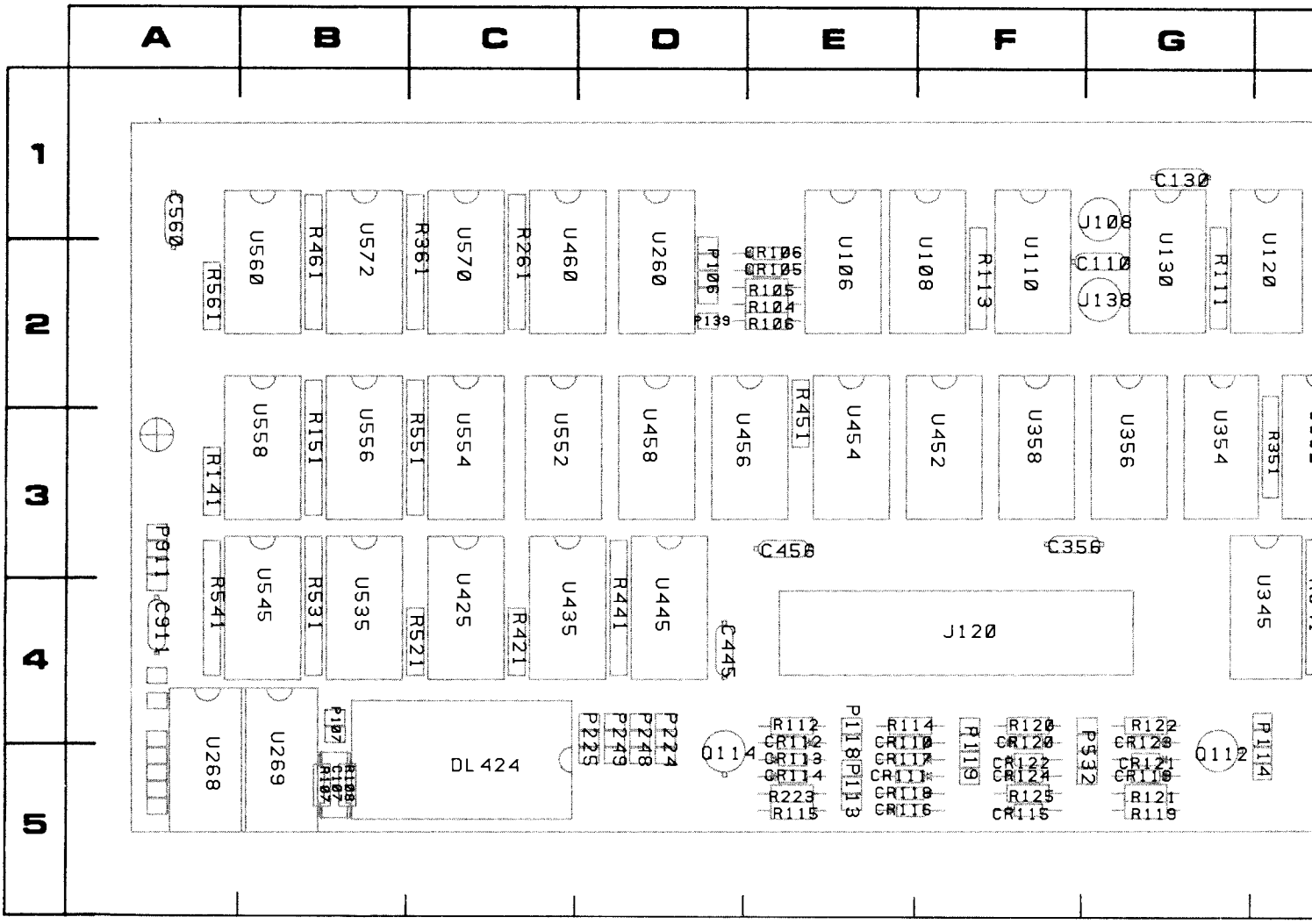

COMPONENT LOCATIONS AS VIEWED WITH BOARD INSTALLED. FOR VIEW OF COMPONENT SIDE OF BOARD, SEE FIGURE 8-3 IN THIS SECTION

Figure 8-9. A2—Memory circuit board. Component locations as viewed with board

CKT NO	GRID COORD	CKT NO	GRID COORD	CKT NO	GRID COORD	CKT NO	GRID COORD	CKT NO	GRID COORD	CKT NO
C107	5B	CR118	5E	P139	2D	R108	5B	R361	2C	U235
C110	2G	CR119	5G	P212	5J	R111	2G	R421	4C	U245
C130	1G	CR120	4F	P213	5J	R112	4E	R441	4D	U252
C150	1I	CR121	5G	P224	4D	R113	2F	R451	3E	U254
C252	3K	CR122	5F	P225	4D	R114	4E	R461	2B	U256
C356	3F	CR123	4G	P236	5J	R115	5E	R521	4C	U258
C445	4D	CR124	5F	P237	5J	R119	5G	R531	4B	U260
C456	3E			P248	4D	R120	4F	R541	4A	U268
C560	1A	DL224	5I	P249	4D	R121	5G	R551	3C	U269
C911	4A	DL424	5C	P530	4K	R122	4G	R561	2A	U335
C935	4K			P532	5G	R125	5F			U345
		J108	1G	P538	4H	R141	3A	U106	2E	U352
CR105	2E	J120	4F	P550	1K	R150	2J	U108	2F	U354
CR106	2E	J138	2G	P911	3A	R151	3B	U110	2F	U356
CR110	4E					R221	4I	U120	2H	U358
CR111	5E	P106	2D	Q112	5G	R223	5E	U130	2G	U425
CR112	4E	P107	4B	Q114	5D	R241	4J	U132	2H	U435
CR113	5E	P112	3K			R251	3J	U132	2H	U445
CR114	5E	P113	5E	R104	2E	R261	2C	U136	2I	U452
CR115	5F	P114	4H	R105	2E	R321	4H	U140	2J	U454
CR116	5E	P118	4E	R106	2E	R341	4H	U150	2I	U456
CR117	5E	P119	5F	R107	5B	R351	3H	U225	4I	U458

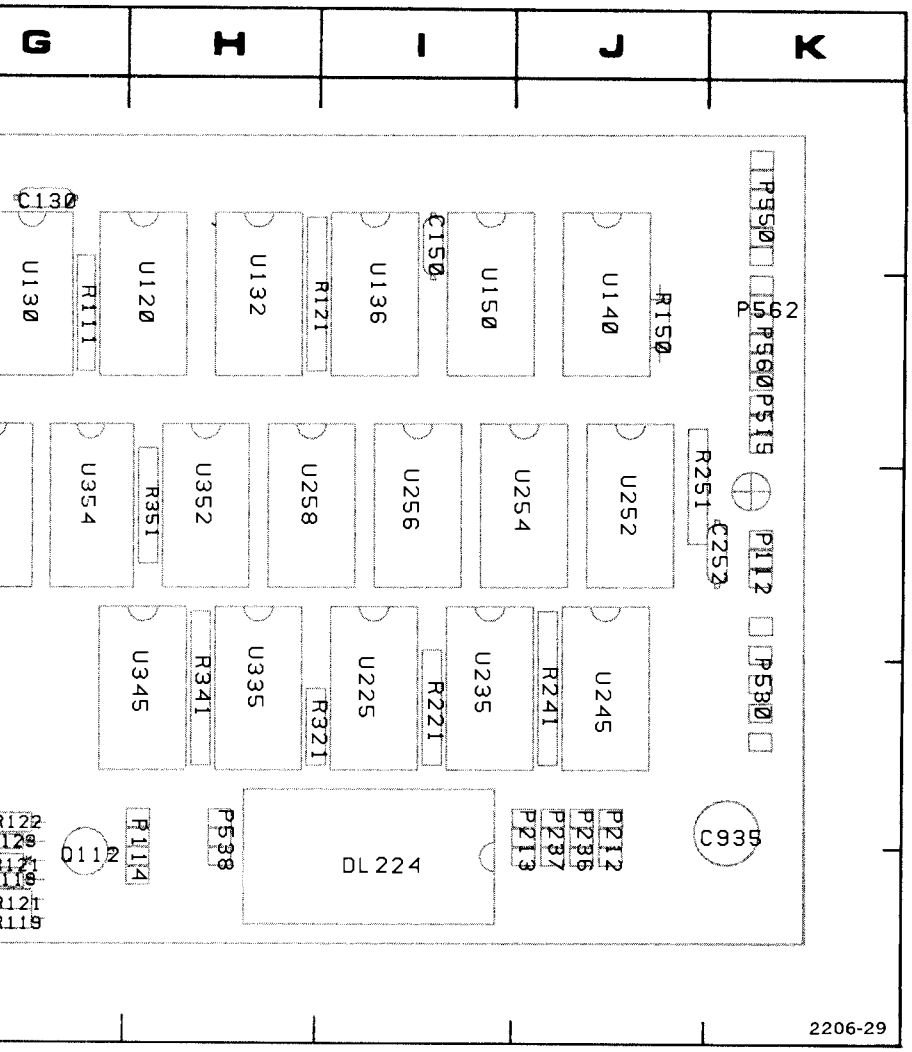

3 IN THIS SECTION.

s as viewed with board installed.

CKT NO	GRID COORD	CKT NO	GRID COORD	CKT NO	GRID COORD
	2C	U235	4I	U460	2C
	4C	U245	4J	U535	4B
	4D	U252	3J	U545	4B
	3E	U254	3J	U552	3C
	2B	U256	3I	U554	3C
	4C	U258	3H	U556	3B
	4B	U260	2D	U558	3B
	4A	U268	5A	U560	2B
	3C	U269	5B	U570	2C
	2A	U335	4H	U572	2B
		U345	4H		
	2E	U352	3H		
	2F	U354	3G		
	2F	U356	3G		
	2H	U358	3F		
	2G	U425	4C		
	2H	U435	4C		
	2H	U445	4D		
	2I	U452	3F		
	2J	U454	3E		
	2I	U456	3D		
	4I	U458	3D		

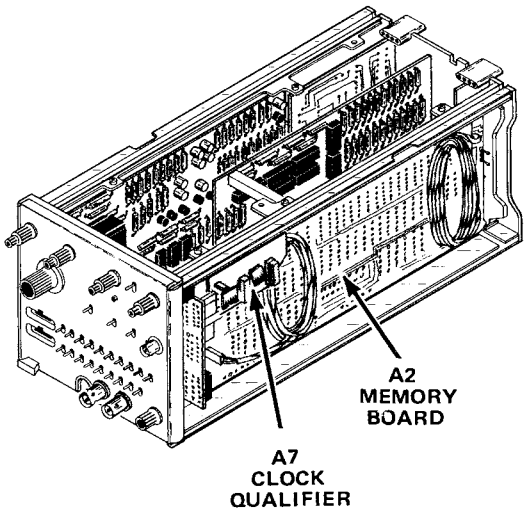

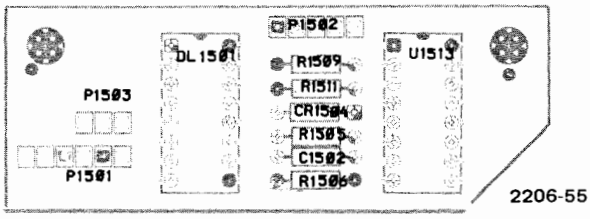

Figure 8-9A. A7—Clock Qualifier circuit board.

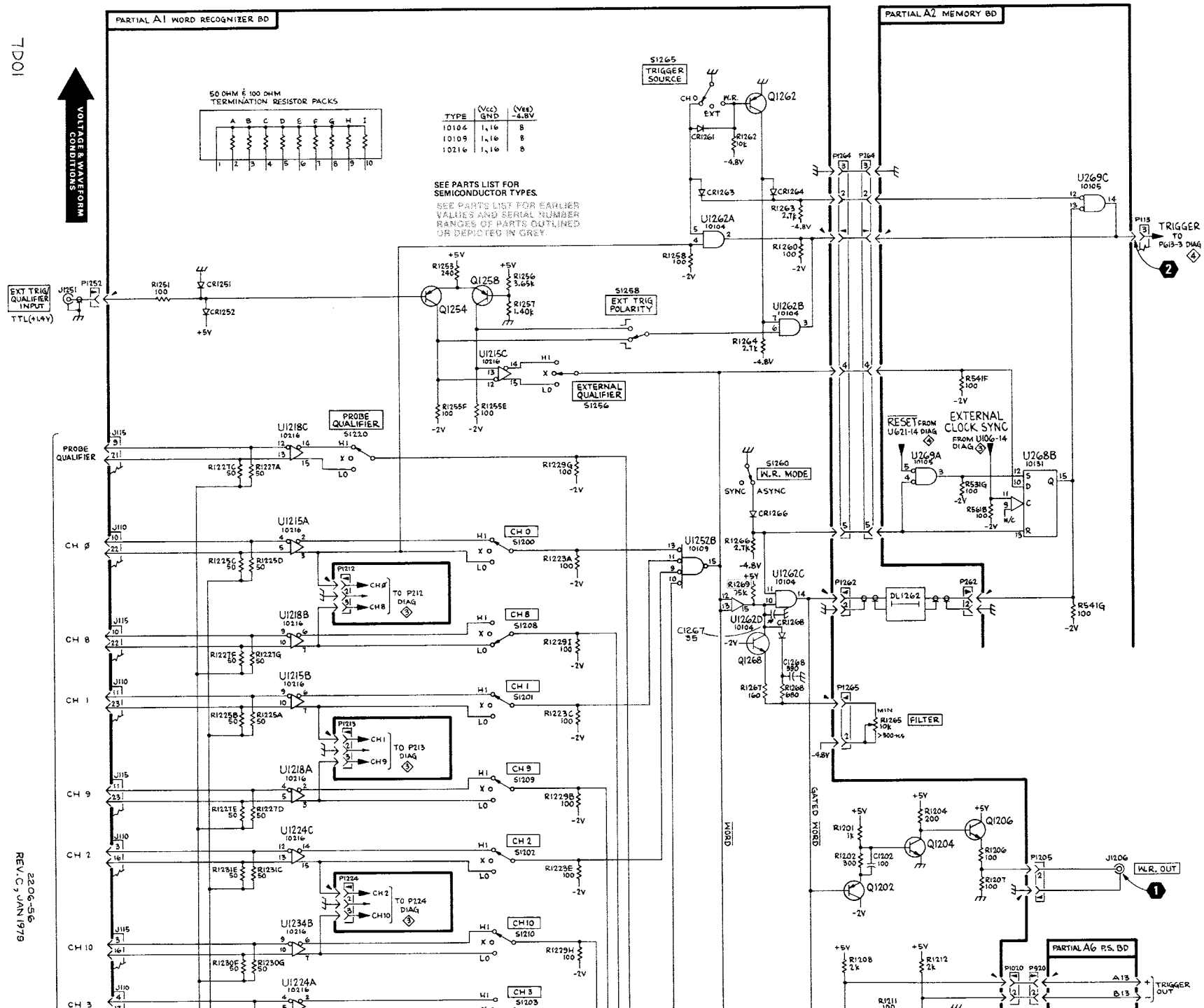
PARTIAL A1 WORD RECOGNIZER BD
PARTIAL A2 MEMORY BD
PARTIAL A6 P.S. BD
VOLTAGE & WAVEFORM CONDITIONS
50 OHM & 100 OHM TERMINATION RESISTOR PACKS
TYPE | (Vcc) GND | (Vee) -4.8V
10104 | 1,16 | 8
10109 | 1,16 | 8
10216 | 1,16 | 8
SEE PARTS LIST FOR SEMICONDUCTOR TYPES.
SEE PARTS LIST FOR EARLIER VALUES AND SERIAL NUMBER RANGES OF PARTS OUTLINED OR DEPICTED IN GREY.
S1265 TRIGGER SOURCE
CH 0
EXT
W.R.
Q1262
CR1261
R1262 10k
-4.8V
CR1263
CR1264
R1263 2.7k
U1262A 10104
R1258 100
R1260 100
-2V
U1262B 10104
R1264 2.7k
S1258 EXT TRIG POLARITY
EXT TRIG/ QUALIFIER INPUT
TTL(+1.4V)
J1251
P1252
R1251 100
CR1251
CR1252
+5V
R1253 240
Q1254
Q1258
R1256 3.65k
R1257 1.40k
U1215C 10216
H1
X
LO
EXTERNAL QUALIFIER S1256
R1255F 100
R1255E 100
PROBE QUALIFIER S1220
U1218C 10216
PROBE QUALIFIER
R1227C 50
R1227A 50
R1229G 100
S1260 W.R. MODE
SYNC
ASYNC
CR1266
U1215A 10216
CH 0
CH 8
CH 1
CH 9
CH 2
CH 10
CH 3
S1200
S1208
S1201
S1209
S1202
S1210
S1203
R1223A 100
R1229I 100
R1223C 100
R1229B 100
R1223E 100
R1229H 100
R1225C 50
R1225D 50
R1227G 50
R1225B 50
R1225A 50
R1227E 50
R1227D 50
R1223E 50
R1223C 50
R1230E 50
R1230G 50
P1212
CH0
CH8
TO P212 DIAG 3
P1213
CH1
CH9
TO P213 DIAG 3
P1224
CH2
CH10
TO P224 DIAG 3
U1218B 10216
U1215B 10216
U1218A 10216
U1224C 10216
U1234B 10216
U1224A 10216
U1252B 10109
U1262C 10104
U1262D 10104
R1266 2.7k
R1269 75k
C1267 35
Q1268
C1268 980
R1268 680
R1267 160
P1265
R1265 10k MIN >800 HZ
FILTER
WORD
GATED WORD
P1264
P1262
DL1262
U269C 10105
P115
TRIGGER TO P613-3 DIAG 4
R541F 100
RESET FROM U621-14 DIAG 4
EXTERNAL CLOCK SYNC FROM U106-14 DIAG 3
U269A 10105
U268B 10131
R531G 100
R561B 100
R541G 100
R1201 1k
R1204 200
Q1206
Q1204
R1202 300
C1202 100
Q1202
R1206 100
R1207 100
P1205
J1206
W.R. OUT
R1208 2k
R1212 2k
R1211 100
P1010
P920
A13
B13
TRIGGER OUT

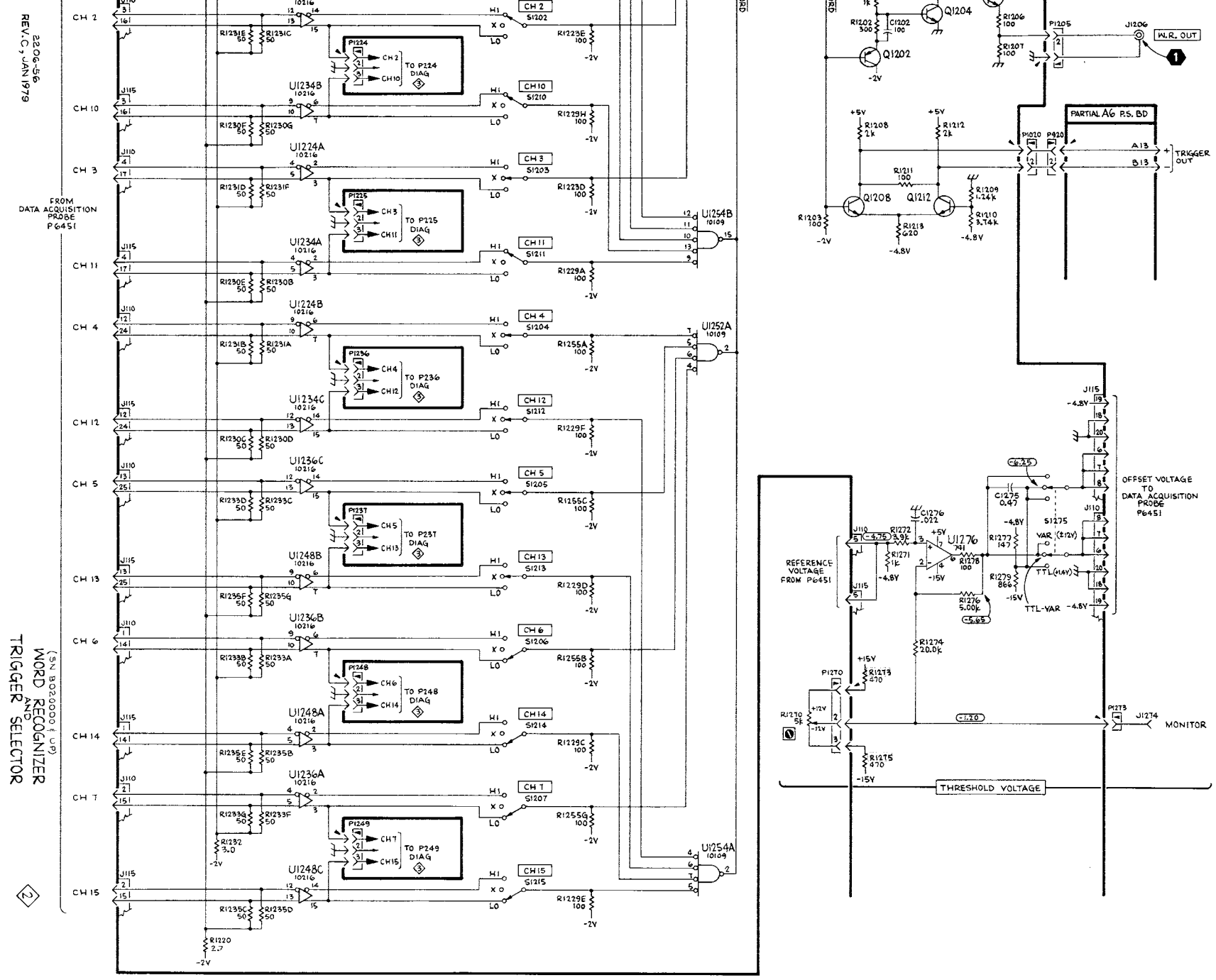
WORD RECOGNIZER AND TRIGGER SELECTOR
(SN B020000 & UP)
22.06-56
REV. C, JAN 1979
FROM DATA ACQUISITION PROBE P6451
CH 2
CH 10
CH 3
CH 11
CH 4
CH 12
CH 5
CH 13
CH 6
CH 14
CH 7
CH 15
U1234B 10216
U1224A 10216
U1234A 10216
U1224B 10216
U1234C 10216
U1236C 10216
U1248B 10216
U1236B 10216
U1248A 10216
U1236A 10216
U1248C 10216
U1254B 10109
U1252A 10109
U1254A 10109
TO P224 DIAG
TO P225 DIAG
TO P236 DIAG
TO P237 DIAG
TO P248 DIAG
TO P249 DIAG
PARTIAL A6 P.S. BD
TRIGGER OUT
W.R. OUT
REFERENCE VOLTAGE FROM P6451
OFFSET VOLTAGE TO DATA ACQUISITION PROBE P6451
THRESHOLD VOLTAGE
MONITOR
TTL-VAR
WORD RECOGNIZER & TRIGGER SOURCE SELECTOR

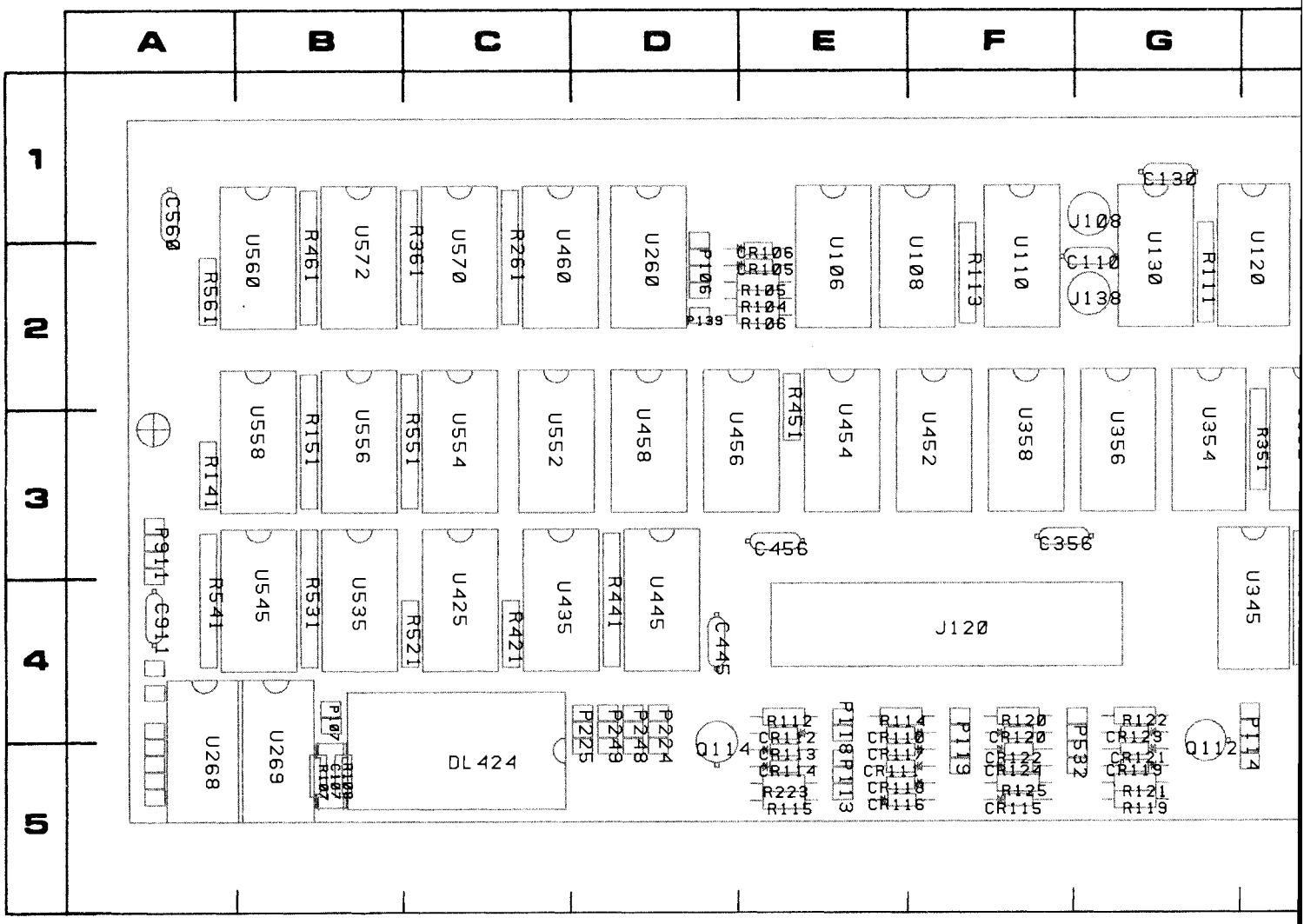

COMPONENT LOCATIONS AS VIEWED WITH BOARD INSTALLED. FOR VIEW OF COMPONENT SIDE OF BOARD, SEE FIGURE 8-3 IN THIS SECTION

Figure 8-9. A2—Memory circuit board. Component locations as viewed with board

CKT NO	GRID COORD	CKT NO	GRID COORD	CKT NO	GRID COORD	CKT NO	GRID COORD	CKT NO	GRID COORD	CKT NO
C107	5B	CR118	5E	P139	2D	R108	5B	R361	2C	U235
C110	2G	CR119	5G	P212	5J	R111	2G	R421	4C	U245
C130	1G	CR120	4F	P213	5J	R112	4E	R441	4D	U252
C132	1I	CR121	5G	P224	4D	R113	2F	R451	3E	U254
C150	1I	CR122	5F	P225	4D	R114	4E	R461	2B	U256
C252	3K	CR123	4G	P236	5J	R115	5E	R521	4C	U258
C356	3F	CR124	5F	P237	5J	R119	5G	R531	4B	U260
C445	4D			P248	4D	R120	4F	R541	4A	U268
C456	3E	DL224	5I	P249	4D	R121	5G	R551	3C	U269
C560	1A	DL424	5C	P530	4K	R122	4G	R561	2A	U335
C911	4A			P532	5G	R125	5F			U345
C935	4K	J108	1G	P538	4H	R141	3A	U106	2E	U352
CR105	2E	J120	4F	P550	1K	R150	2J	U108	2F	U354
CR106	2E	J138	2G	P911	3A	R151	3B	U110	2F	U356
CR110	4E					R221	4I	U120	2H	U358
CR111	5E	P106	2D	Q112	5G	R223	5E	U130	2G	U425
CR112	4E	P107	4B	Q114	5D	R241	4J	U132	2H	U435
CR113	5E	P112	3K			R251	3J	U132	2H	U445
CR114	5E	P113	5E	R104	2E	R261	2C	U136	2I	U452
CR115	5F	P114	4H	R105	2E	R321	4H	U140	2J	U454
CR116	5E	P118	4E	R106	2E	R341	4H	U150	2I	U456
CR117	5E	P119	5F	R107	5B	R351	3H	U225	4I	U458

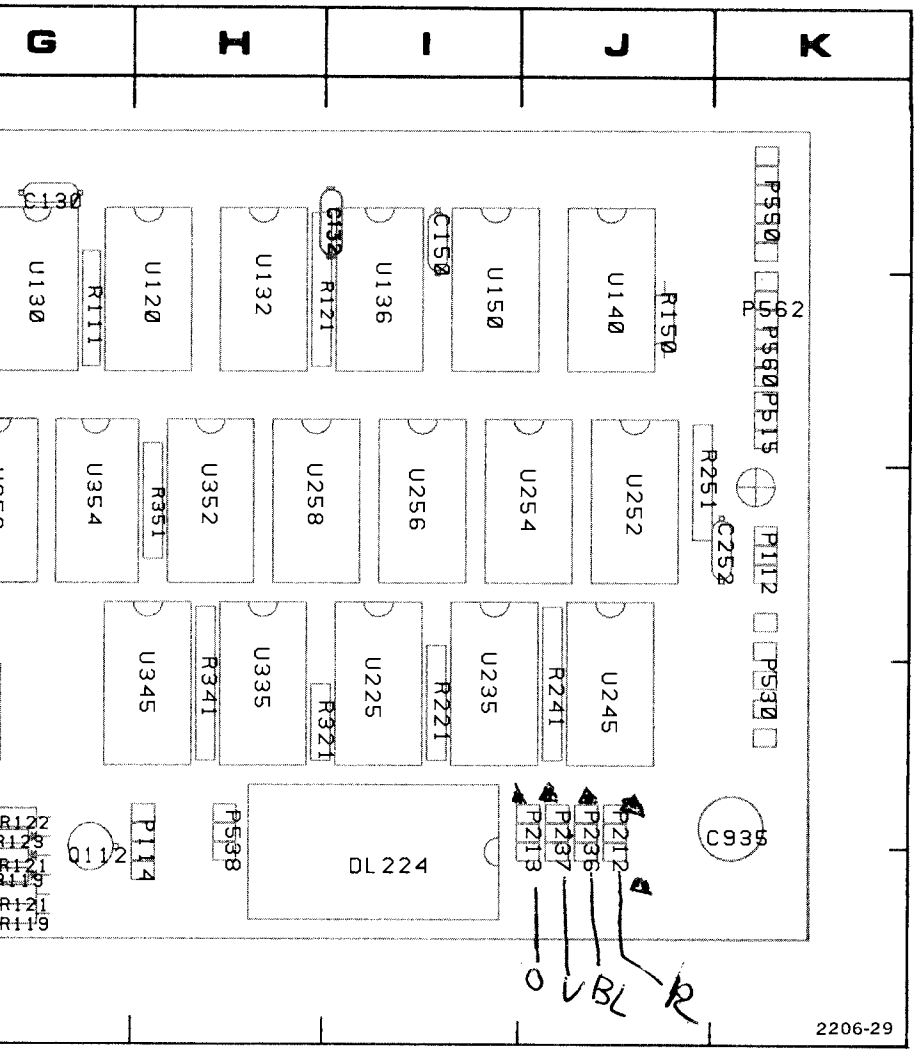

3-3 IN THIS SECTION.

s as viewed with board installed.

	GRID COORD	CKT NO	GRID COORD	CKT NO	GRID COORD
	2C	U235	4I	U460	2C
	4C	U245	4J	U535	4B
	4D	U252	3J	U545	4B
	3E	U254	3J	U552	3C
	2B	U256	3I	U554	3C
	4C	U258	3H	U556	3B
	4B	U260	2D	U558	3B
	4A	U268	5A	U560	2B
	3C	U269	5B	U570	2C
	2A	U335	4H	U572	2B
		U345	4H		
	2E	U352	3H		
	2F	U354	3G		
	2F	U356	3G		
	2H	U358	3F		
	2G	U425	4C		
	2H	U435	4C		
	2H	U445	4D		
	2I	U452	3F		
	2J	U454	3E		
	2I	U456	3D		
	4I	U458	3D		

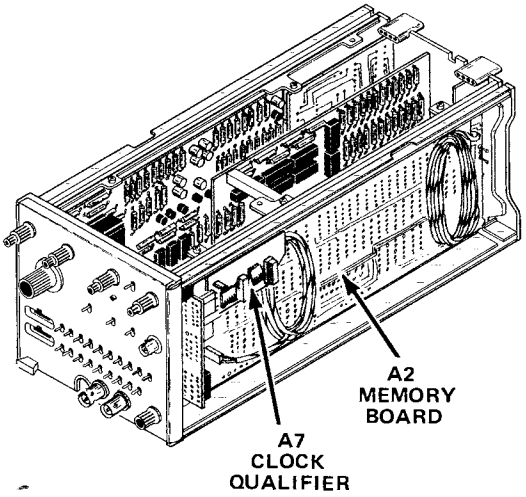

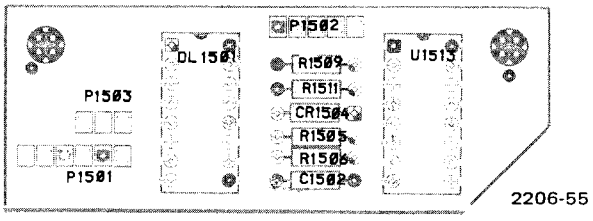

Figure 8-9A. A7—Clock Qualifier circuit board.

VOLTAGE AND WAVEFORM CONDITIONS

Voltages and Waveforms shown are typical, but may vary between instruments.

TEST SETUP: The 7D01 is connected to the 7000-series mainframe through two 067-0616-00 Flexible Plug-in Extenders. The 7D01 controls are set as follows:

Waveforms (1) and (3)

DATA CHANNELS. 0-3
DISPLAY TIME. . . . . .1 s
TRIGGER SOURCE . . . . . .EXT.
SAMPLE INTERVAL . . . . . .1 μs

Waveforms (2) and (4)

DATA CHANNELS. 0-7
DISPLAY TIME. . . . . .1 s
TRIGGER SOURCE . . . . . .EXT
SAMPLE INTERVAL . . . . . .1 μs

The 7D01 is untriggered (EXT TRIG connector open).

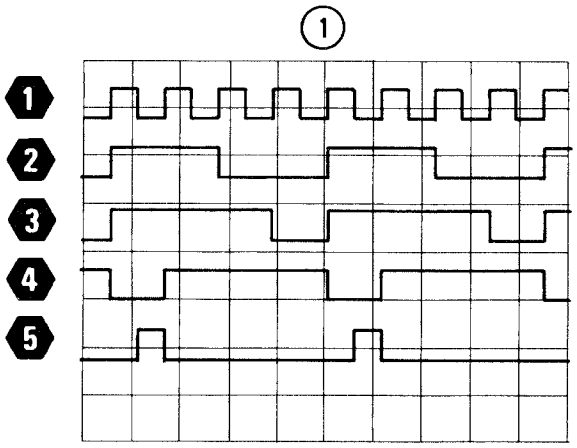

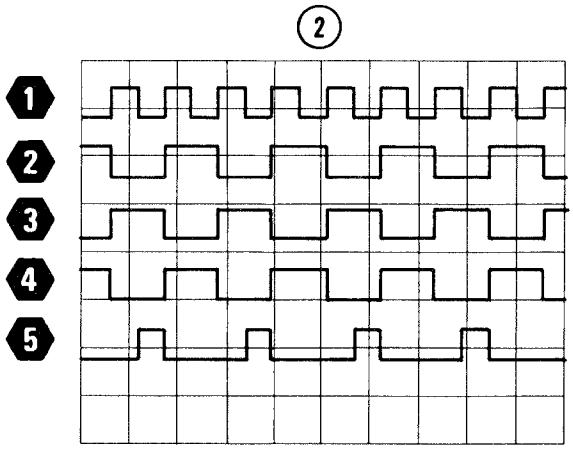

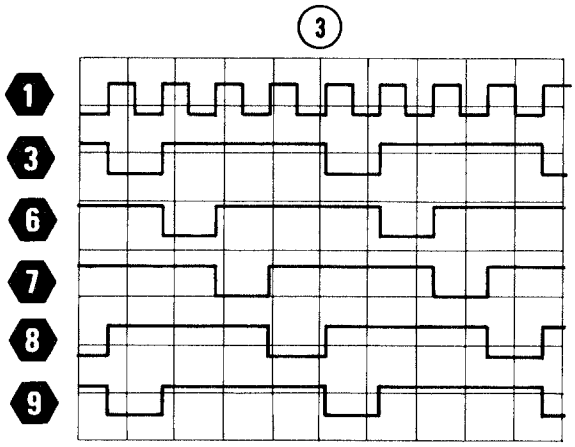

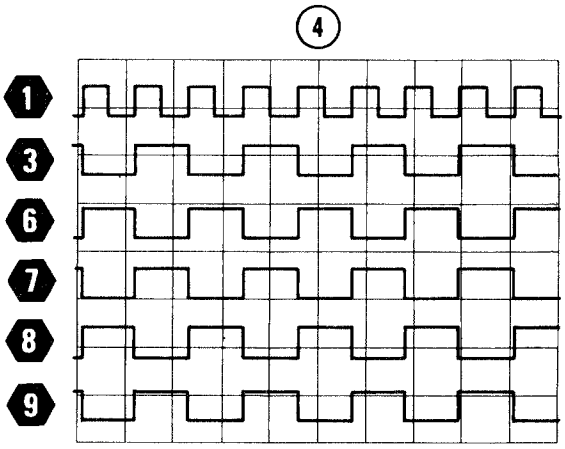

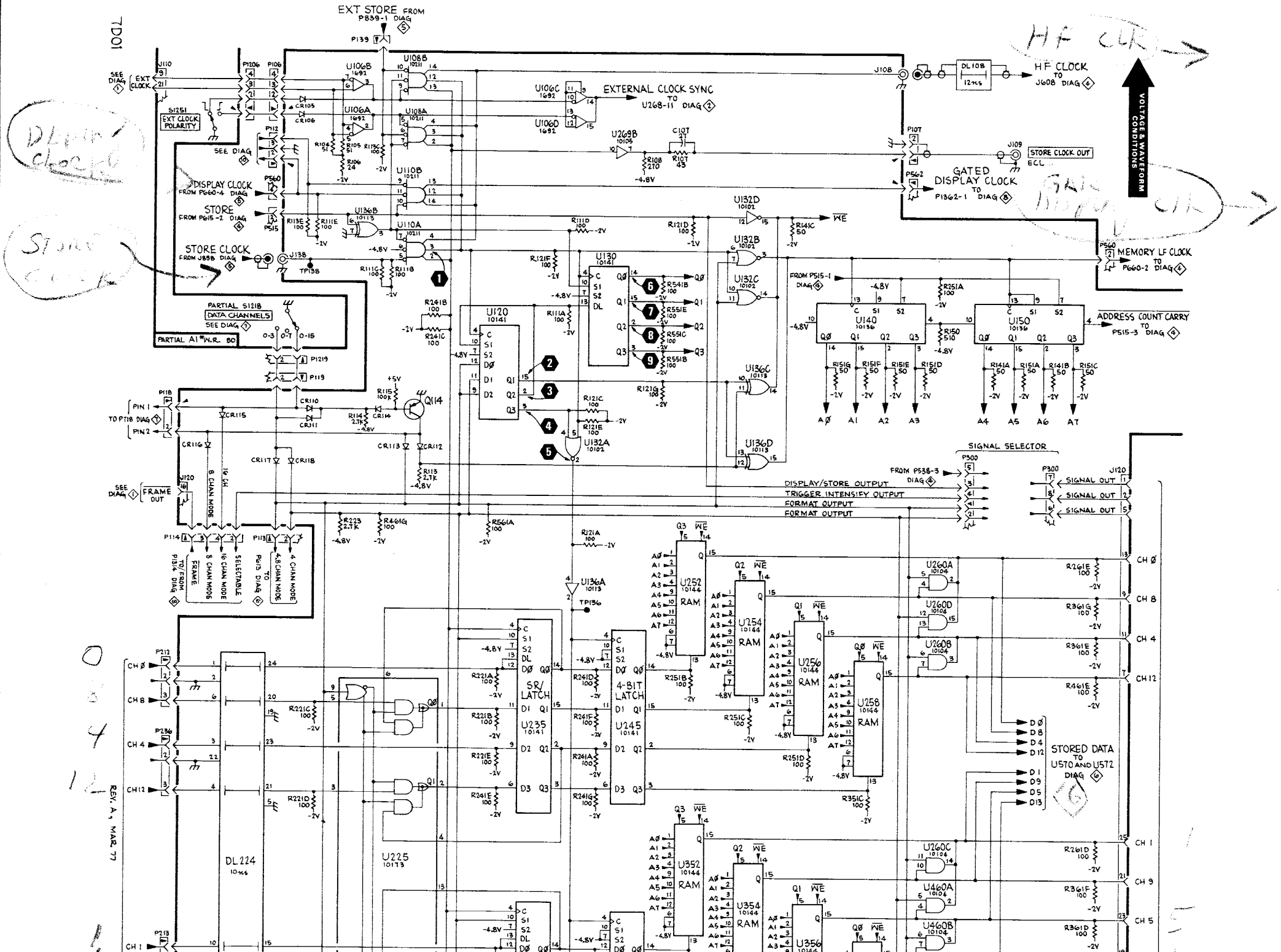
EXT STORE FROM P839-1 DIAG 5
EXT CLOCK
EXT CLOCK POLARITY
DISPLAY CLOCK FROM P660-4 DIAG 5
STORE FROM P615-2 DIAG 4
STORE CLOCK FROM J838 DIAG 6
PARTIAL S121B DATA CHANNELS SEE DIAG 7
PARTIAL A1*W.R. 80
FRAME OUT
EXTERNAL CLOCK SYNC TO U268-11 DIAG 2
HF CLOCK TO J608 DIAG 4
DL108 12ns
STORE CLOCK OUT ECL
GATED DISPLAY CLOCK TO P1362-1 DIAG 8
MEMORY LF CLOCK TO P660-2 DIAG 4
ADDRESS COUNT CARRY TO P515-3 DIAG 4
SIGNAL SELECTOR
DISPLAY/STORE OUTPUT
TRIGGER INTENSIFY OUTPUT
FORMAT OUTPUT
FORMAT OUTPUT
SIGNAL OUT
SIGNAL OUT
SIGNAL OUT
STORED DATA TO U570 AND U572 DIAG 6
DL224 10ns
SR/LATCH U235 10141
4-BIT LATCH U245 10141
U252 10144 RAM
U254 10144 RAM
U256 10144 RAM
U258 10144 RAM
U352 10144 RAM
U354 10144 RAM
U356 10144 RAM
U225 10173
U120 10141
U130 10141
U140 10136
U150 10136
VOLTAGE & WAVEFORM CONDITIONS
REV. A, MAR 77

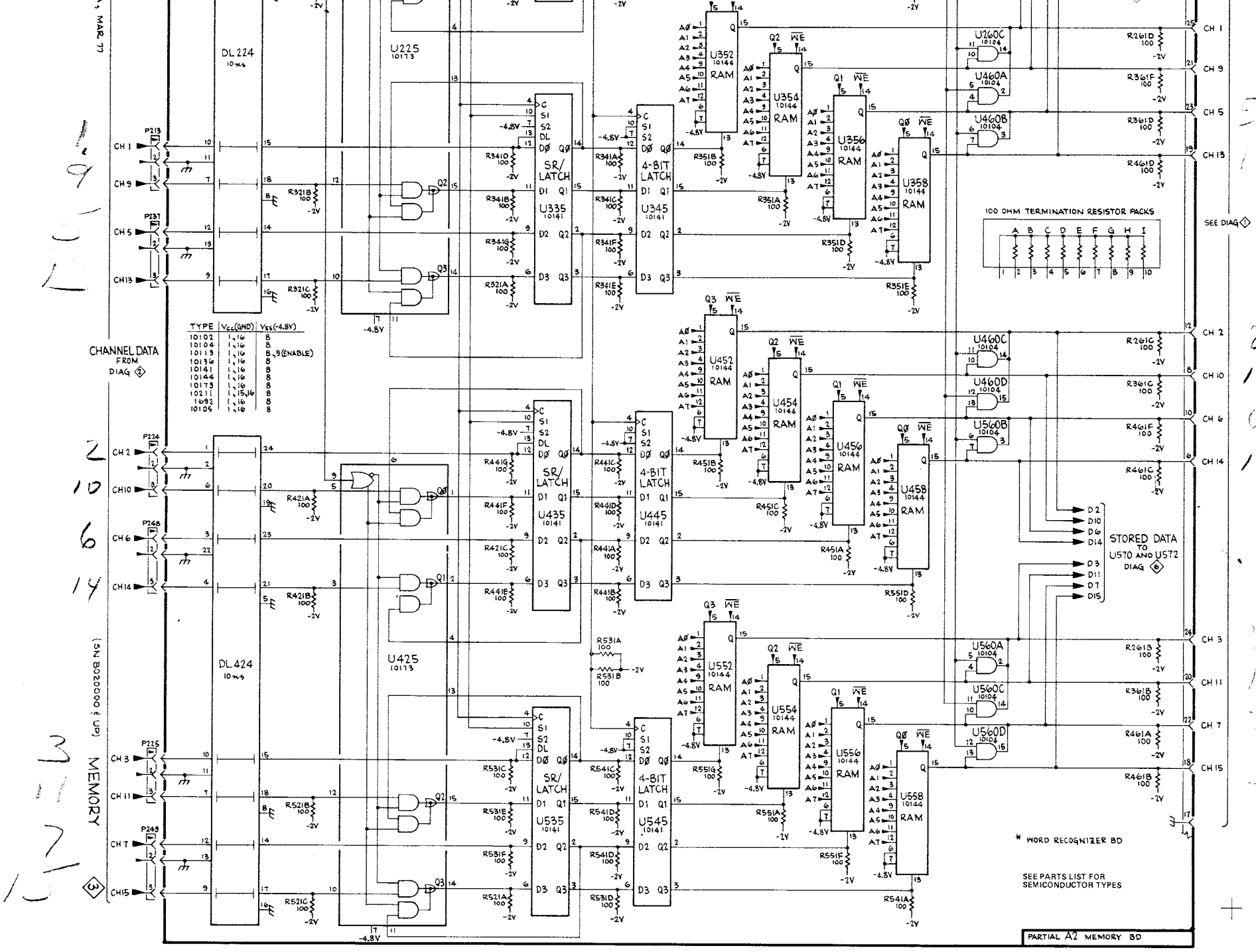
MEMORY
(SN B020000 & UP)
CHANNEL DATA FROM DIAG 2
DL 224
DL 424
U225
U425
SR/LATCH
4-BIT LATCH
U335
U435
U535
U345
U445
U545
U352
U354
U356
U358
U452
U454
U456
U458
U552
U554
U556
U558
RAM
U260C
U460A
U460B
U460C
U460D
U560A
U560B
U560C
U560D
100 OHM TERMINATION RESISTOR PACKS
STORED DATA TO U570 AND U572 DIAG 6
SEE DIAG 1
* WORD RECOGNIZER BD
SEE PARTS LIST FOR SEMICONDUCTOR TYPES
PARTIAL A2 MEMORY BD
TYPE | VCC(GND) | VEE(-4.8V)
10102 | 1,16 | 8
10104 | 1,16 | 8
10113 | 1,16 | 8,9(ENABLE)
10136 | 1,16 | 8
10141 | 1,16 | 8
10144 | 1,16 | 8
10173 | 1,16 | 8
10211 | 1,15,16 | 8
1092 | 1,16 | 8
10105 | 1,16 | 8

7D01 (SN B020000 & up)

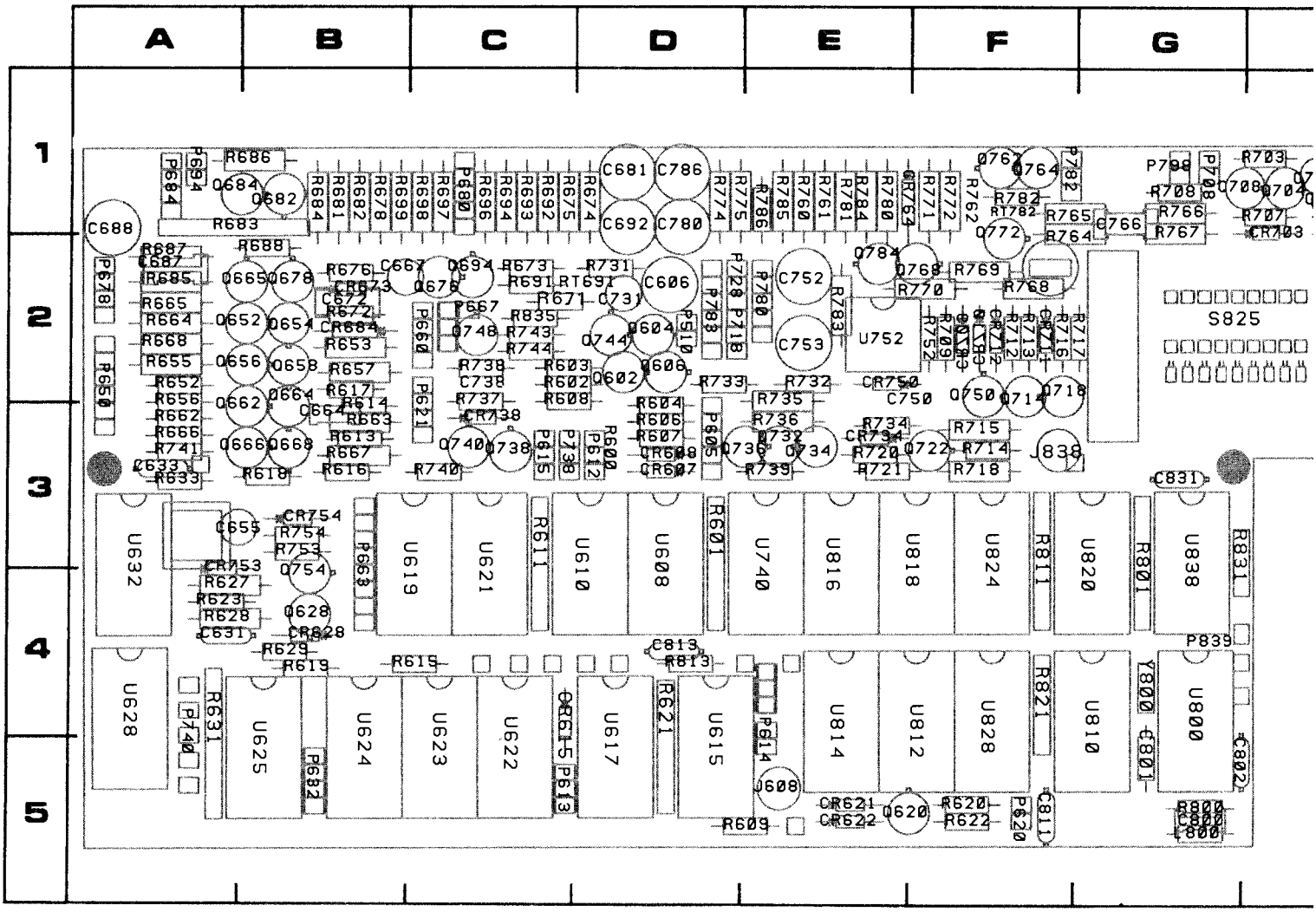

COMPONENT LOCATIONS AS VIEWED WITH BOARD INSTALLED. FOR VIEW OF COMPONENT SIDE OF BOARD, SEE FIGURE 8-5 IN THIS SECTION

Figure 8-10. A3—Output circuit board. Component locations as viewed with board installed.

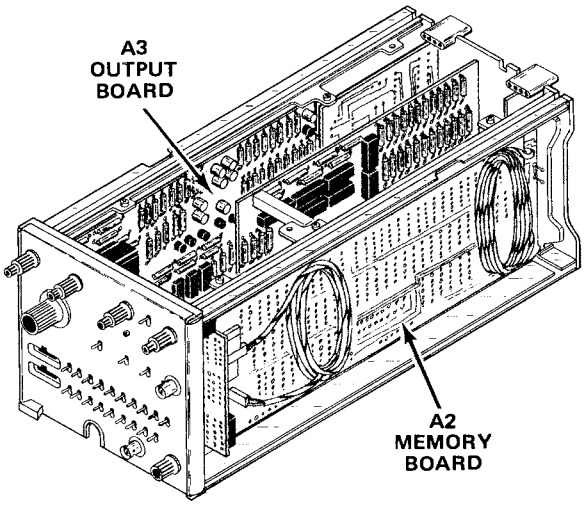

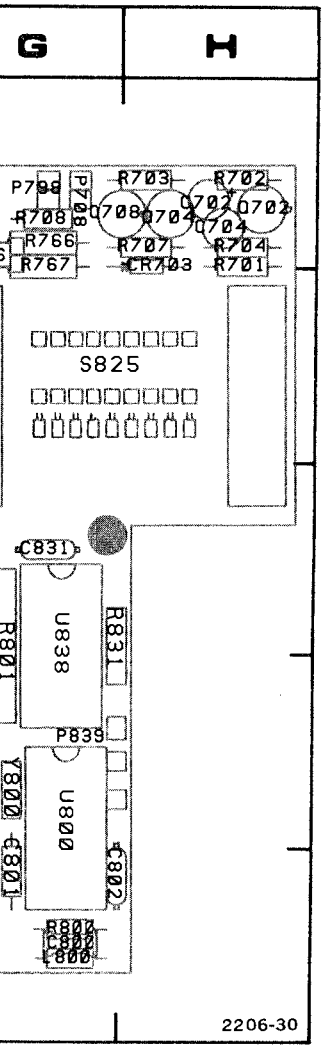

3-5 IN THIS SECTION.

CKT NO	GRID COORD	CKT NO	GRID COORD	CKT NO	GRID COORD	CKT NO	GRID COORD	CKT NO	GRID COORD
C606	2D	P605	3D	Q740	3C	R678	1B	R767	1G
C631	4A	P612	3D	Q744	2D	R681	1B	R768	2F
C633	3A	P613	5C	Q748	2C	R682	1B	R769	2F
C655	3A	P614	4E	Q750	2F	R683	1A	R770	2F
C664	3B	P615	3C	Q754	3B	R684	1B	R771	1F
C667	2B	P620	5F	Q762	1F	R685	2A	R772	1F
C672	2B	P621	2C	Q764	1F	R686	1A	R774	1D
C681	1D	P632	5B	Q768	2F	R687	2A	R775	1D
C687	2A	P650	2A	Q772	1F	R688	2B	R780	1E
C688	1A	P660	2C	Q784	2E	R691	2C	R781	1E
C692	1D	P663	3B			R692	1C	R782	1F
C702	1H	P667	2C	R600	3D	R693	1C	R783	2E
C704	1H	P678	2A	R601	3D	R694	1C	R784	1E
C731	2D	P680	1C	R602	2C	R696	1C	R785	1E
C738	2C	P684	1A	R603	2C	R697	1C	R786	1E
C750	2E	P694	1A	R604	2D	R698	1C	R800	5G
C752	2E	P708	1G	R606	3D	R699	1B	R801	3G
C753	2E	P718	2D	R607	3D	R701	1H	R811	3F
C766	1G	P738	3C	R608	2C	R702	1H	R813	4D
C780	1D	P740	4A	R609	5D	R703	1H	R821	4F
C786	1D	P780	2E	R611	3C	R704	1H	R831	3G
C800	5G	P782	1F	R613	3B	R707	1H	R835	2C
C801	5G	P783	2D	R614	2B	R708	1G		
C802	5G	P798	1G	R615	4B	R709	2F	RT691	2C
C811	5F	P839	4G	R616	3B	R712	2F	RT782	1F
C813	4D			R617	2B	R713	2F		
C831	3G	Q602	2D	R618	3B	R714	3F	S825	2G
		Q604	2D	R619	4B	R715	3F		
CR607	3D	Q606	2D	R620	5F	R716	2F	U608	3D
CR608	3D	Q620	5E	R621	4D	R717	2F	U610	3D
CR615	4C	Q628	4B	R622	5F	R718	3F	U615	5D
CR621	5E	Q652	2A	R623	4A	R720	3E	U617	5D
CR622	5E	Q654	2B	R627	4A	R721	3E	U619	3C
CR628	4B	Q656	2A	R628	4A	R731	2D	U621	3C
CR673	2B	Q658	2B	R629	4B	R732	2E	U622	5C
CR684	2B	Q662	2A	R631	4A	R733	2D	U623	5C
CR703	1H	Q664	2B	R633	3A	R734	3E	U624	5B
CR709	2F	Q665	2A	R652	2A	R735	2E	U625	5B
CR710	2F	Q666	3A	R653	2B	R736	3E	U628	4A
CR711	2F	Q668	3B	R655	2A	R737	2C	U632	3A
CR712	2F	Q676	2C	R656	2A	R738	2C	U740	3E
CR717	2F	Q678	2B	R657	2B	R739	3E	U752	2E
CR734	3E	Q682	1B	R662	3A	R740	3C	U800	4G
CR738	3C	Q684	1A	R663	3B	R741	3A	U810	4G
CR750	2E	Q694	2C	R664	2A	R743	2C	U812	4F
CR753	3A	Q702	1H	R665	2A	R744	2C	U814	4E
CR754	3B	Q704	1H	R666	3A	R752	2F	U816	3E
CR764	1E	Q708	1G	R667	3B	R753	3B	U818	3F
		Q714	2F	R668	2A	R754	3B	U820	3G
J608	5E	Q718	2F	R671	2C	R760	1E	U824	3F
J838	3F	Q722	3F	R672	2B	R761	1E	U828	4F
		Q732	3E	R673	2C	R762	1F	U838	3G
L800	5G	Q734	3E	R674	1D	R764	1F		
		Q736	3D	R675	1C	R765	1F	Y800	4G
P510	2D	Q738	3C	R676	2B	R766	1G		

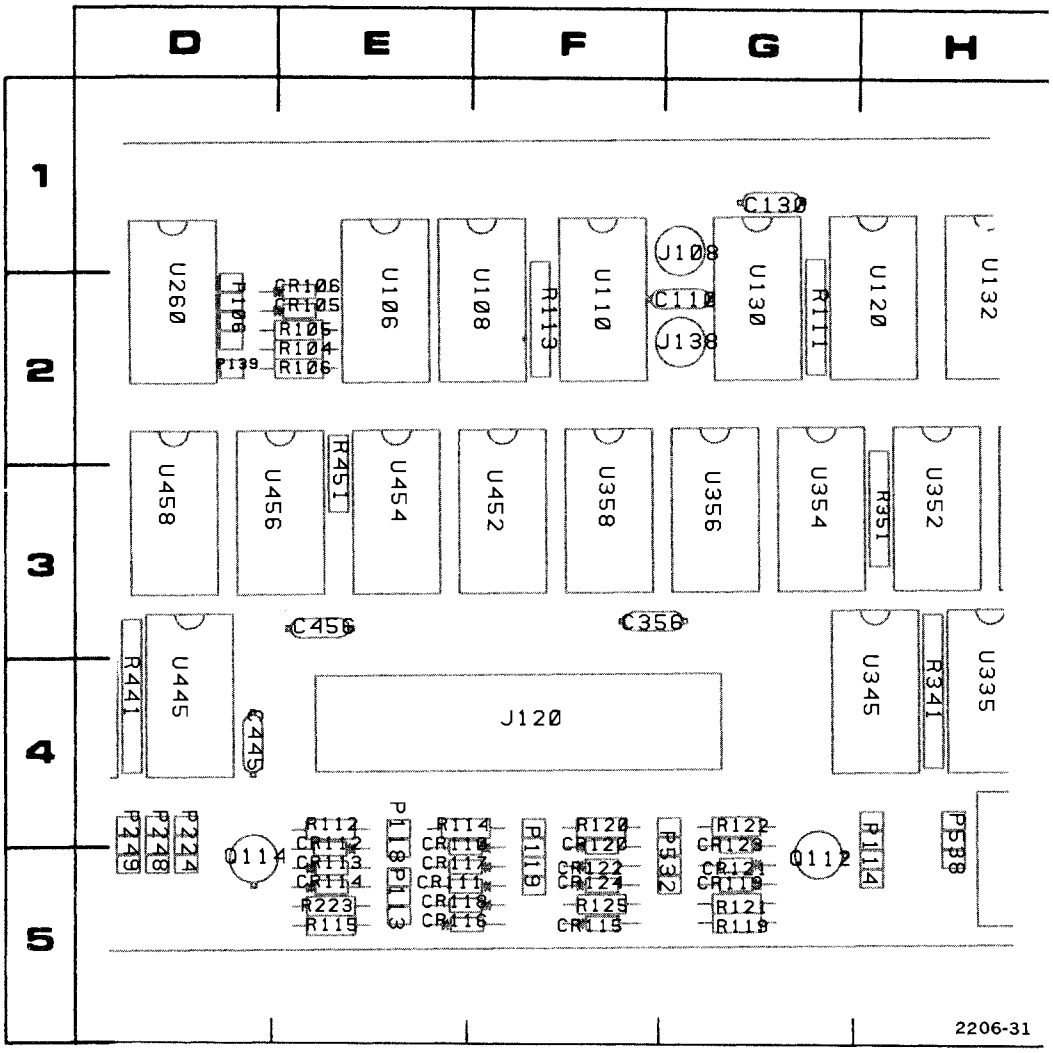

COMPONENT LOCATIONS AS VIEWED WITH BOARD INSTALLED. FOR VIEW OF COMPONENT SIDE OF BOARD, SEE FIGURE 8-3 IN THIS SECTION.

Figure 8-11. Partial A2—Memory circuit board. Component locations as viewed with board installed.

CKT NO	GRID COORD	CKT NO	GRID COORD	CKT NO	GRID COORD	CKT NO	GRID COORD	CKT NO	GRID COORD	CKT NO	GRID COORD	CKT NO	GRID COORD
C107	5B	CR118	5E	P139	2D	R108	5B	R361	2C	U235	4I	U460	2C
C110	2G	CR119	5G	P212	5J	R111	2G	R421	4C	U245	4J	U535	4B
C130	1G	CR120	4F	P213	5J	R112	4E	R441	4D	U252	3J	U545	4B
C150	1I	CR121	5G	P224	4D	R113	2F	R451	3E	U254	3J	U552	3C
C252	3K	CR122	5F	P225	4D	R114	4E	R461	2B	U256	3I	U554	3C
C356	3F	CR123	4G	P236	5J	R115	5E	R521	4C	U258	3H	U556	3B
C445	4D	CR124	5F	P237	5J	R119	5G	R531	4B	U260	2D	U558	3B
C456	3E			P248	4D	R120	4F	R541	4A	U268	5A	U560	2B
C560	1A	DL224	5I	P249	4D	R121	5G	R551	3C	U269	5B	U570	2C
C911	4A	DL424	5C	P350	4K	R122	4G	R561	2A	U335	4H	U572	2B
C935	4K			P532	5G	R125	5F			U345	4H		
		J108	1G	P538	4H	R141	3A	U106	2E	U352	3H		
CR105	2E	J120	4F	P550	1K	R150	2J	U108	2F	U354	3G		
CR106	2E	J138	2G	P911	3A	R151	3B	U110	2F	U356	3G		
CR110	4E					R221	4I	U120	2H	U358	3F		
CR111	5E	P106	2D	Q112	5G	R223	5E	U130	2G	U425	4C		
CR112	4E	P107	4B	Q114	5D	R241	4J	U132	2H	U435	4C		
CR113	5E	P112	3K			R251	3J	U132	2H	U445	4D		
CR114	5E	P113	5E	R104	2E	R261	2C	U136	2I	U452	3F		
CR115	5F	P114	4H	R105	2E	R321	4H	U140	2J	U454	3E		
CR116	5E	P118	4E	R106	2E	R341	4H	U150	2I	U456	3D		
CR117	5E	P119	5F	R107	5B	R351	3H	U225	4I	U458	3D		

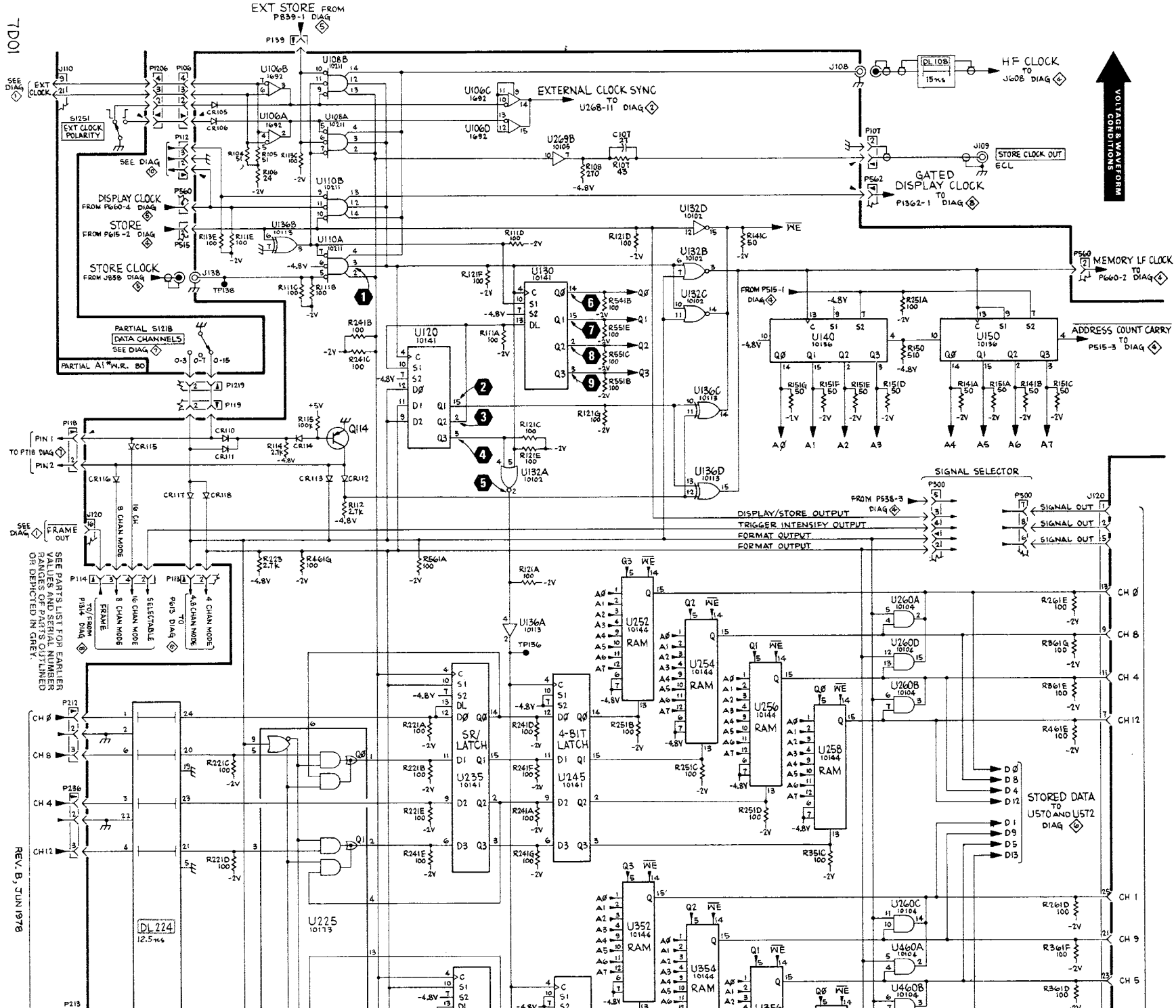
7D01
EXT STORE FROM PB39-1 DIAG
EXT CLOCK
S1251 EXT CLOCK POLARITY
DISPLAY CLOCK FROM P660-4 DIAG
STORE FROM P615-2 DIAG
STORE CLOCK FROM J838 DIAG
PARTIAL S1218 DATA CHANNELS
PARTIAL A1 W.R. BD
EXTERNAL CLOCK SYNC TO U268-11 DIAG
HF CLOCK TO J608 DIAG
STORE CLOCK OUT ECL
GATED DISPLAY CLOCK TO P1362-1 DIAG
MEMORY LF CLOCK TO P660-2 DIAG
ADDRESS COUNT CARRY TO P515-3 DIAG
VOLTAGE & WAVEFORM CONDITIONS
SIGNAL SELECTOR
DISPLAY/STORE OUTPUT
TRIGGER INTENSIFY OUTPUT
FORMAT OUTPUT
FORMAT OUTPUT
SIGNAL OUT
STORED DATA TO U570 AND U572 DIAG
SR/LATCH U235
4-BIT LATCH U245
RAM
DL 224 12.5ns
DL 108 15ns
SEE PARTS LIST FOR EARLIER VALUES AND SERIAL NUMBER RANGES OF PARTS OUTLINED OR DEPICTED IN GREY.
REV. B, JUN 1978

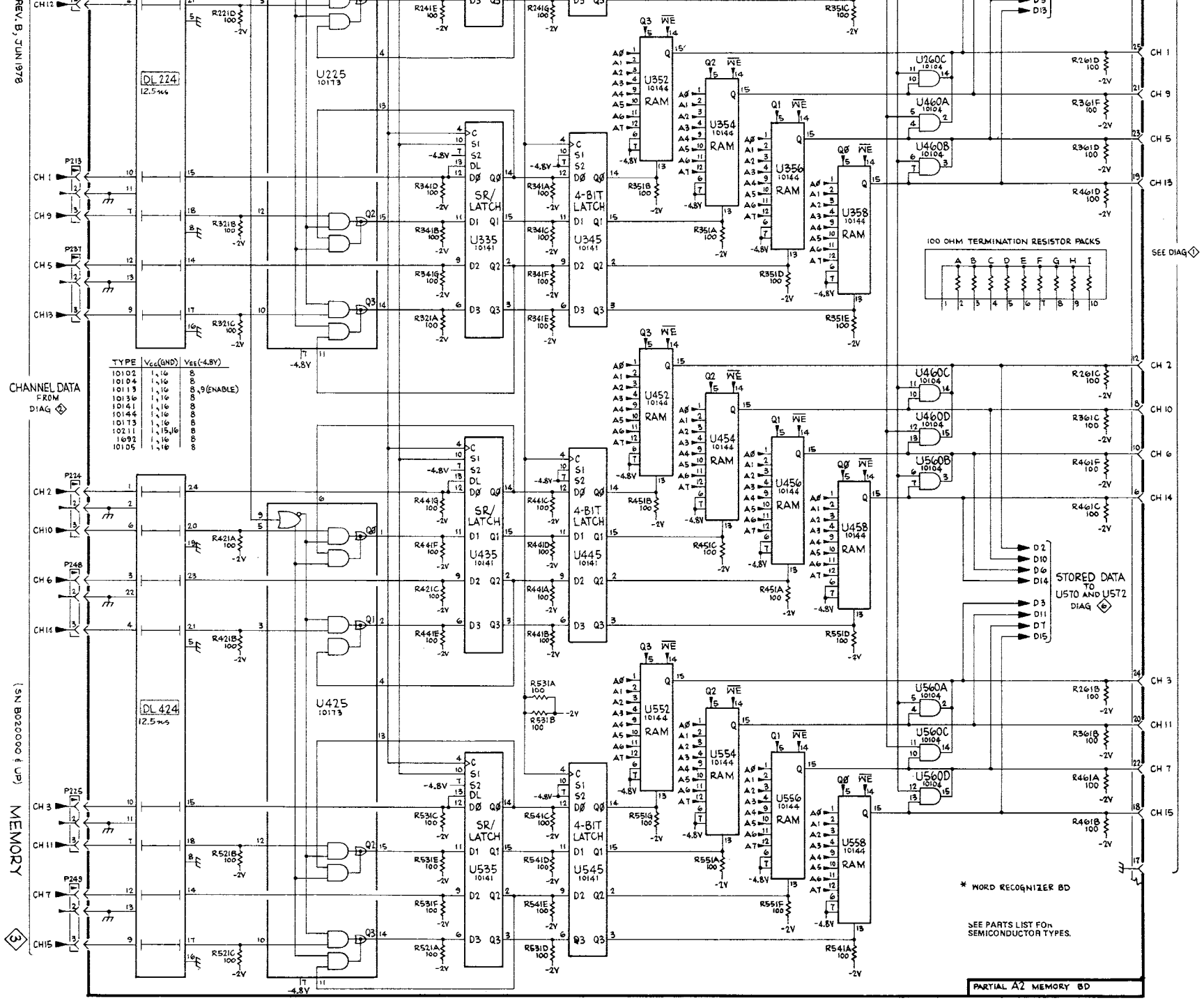

TYPE	V_{CC}(GND)	V_{EE}(-4.8V)
10102	1,16	8
10104	1,16	8
10113	1,16	8,9(ENABLE)
10136	1,16	8
10141	1,16	8
10144	1,16	8
10173	1,16	8
10211	1,15,16	8
10692	1,16	8
10105	1,16	8

7D01 (SN B020000 & up)

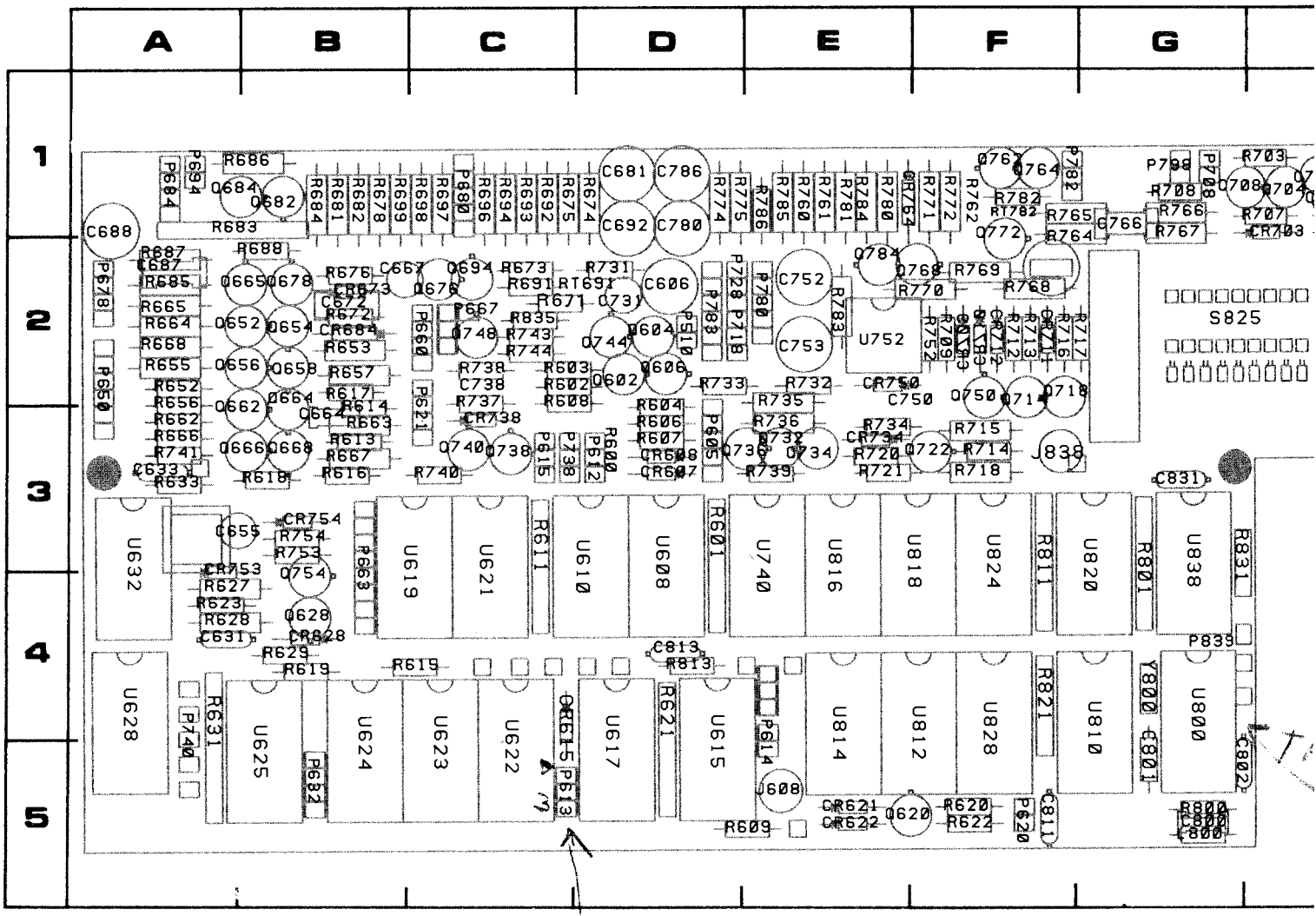

COMPONENT LOCATIONS AS VIEWED WITH BOARD INSTALLED. FOR VIEW OF COMPONENT SIDE OF BOARD, SEE FIGURE 8-5 IN THIS SECTION

Figure 8-10. A3—Output circuit board. Component locations as viewed with board installed.

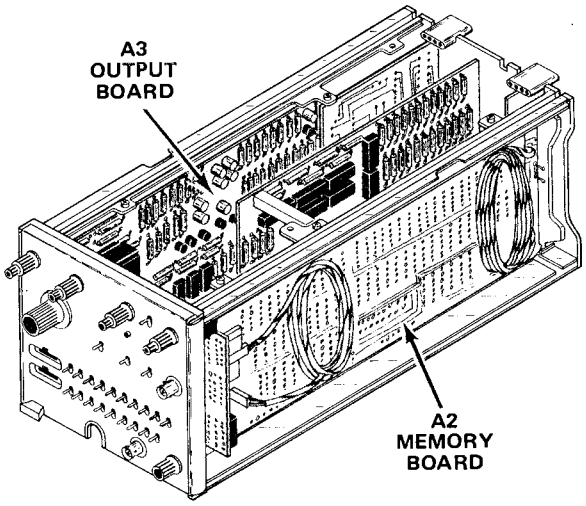

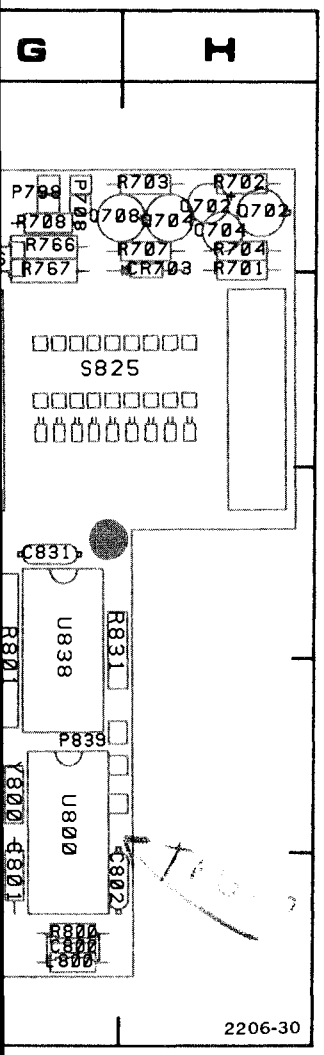

-5 IN THIS SECTION.

CKT NO	GRID COORD	CKT NO	GRID COORD	CKT NO	GRID COORD	CKT NO	GRID COORD	CKT NO	GRID COORD
C606	2D	P605	3D	Q740	3C	R678	1B	R767	1G
C631	4A	P612	3D	Q744	2D	R681	1B	R768	2F
C633	3A	P613	5C	Q748	2C	R682	1B	R769	2F
C655	3A	P614	4E	Q750	2F	R683	1A	R770	2F
C664	3B	P615	3C	Q754	3B	R684	1B	R771	1F
C667	2B	P620	5F	Q762	1F	R685	2A	R772	1F
C672	2B	P621	2C	Q764	1F	R686	1A	R774	1D
C681	1D	P632	5B	Q768	2F	R687	2A	R775	1D
C687	2A	P650	2A	Q772	1F	R688	2B	R780	1E
C688	1A	P660	2C	Q784	2E	R691	2C	R781	1E
C692	1D	P663	3B			R692	1C	R782	1F
C702	1H	P667	2C	R600	3D	R693	1C	R783	2E
C704	1H	P678	2A	R601	3D	R694	1C	R784	1E
C731	2D	P680	1C	R602	2C	R696	1C	R785	1E
C738	2C	P684	1A	R603	2C	R697	1C	R786	1E
C750	2E	P694	1A	R604	2D	R698	1C	R800	5G
C752	2E	P708	1G	R606	3D	R699	1B	R801	3G
C753	2E	P718	2D	R607	3D	R701	1H	R811	3F
C766	1G	P738	3C	R608	2C	R702	1H	R813	4D
C780	1D	P740	4A	R609	5D	R703	1H	R821	4F
C786	1D	P780	2E	R611	3C	R704	1H	R831	3G
C800	5G	P782	1F	R613	3B	R707	1H	R835	2C
C801	5G	P783	2D	R614	2B	R708	1G		
C802	5G	P798	1G	R615	4B	R709	2F	RT691	2C
C811	5F	P839	4G	R616	3B	R712	2F	RT782	1F
C813	4D			R617	2B	R713	2F		
C831	3G	Q602	2D	R618	3B	R714	3F	S825	2G
		Q604	2D	R619	4B	R715	3F		
CR607	3D	Q606	2D	R620	5F	R716	2F	U608	3D
CR608	3D	Q620	5E	R621	4D	R717	2F	U610	3D
CR615	4C	Q628	4B	R622	5F	R718	3F	U615	5D
CR621	5E	Q652	2A	R623	4A	R720	3E	U617	5D
CR622	5E	Q654	2B	R627	4A	R721	3E	U619	3C
CR628	4B	Q656	2A	R628	4A	R731	2D	U621	3C
CR673	2B	Q658	2B	R629	4B	R732	2E	U622	5C
CR684	2B	Q662	2A	R631	4A	R733	2D	U623	5C
CR703	1H	Q664	2B	R633	3A	R734	3E	U624	5B
CR709	2F	Q665	2A	R652	2A	R735	2E	U625	5B
CR710	2F	Q666	3A	R653	2B	R736	3E	U628	4A
CR711	2F	Q668	3B	R655	2A	R737	2C	U632	3A
CR712	2F	Q676	2C	R656	2A	R738	2C	U740	3E
CR717	2F	Q678	2B	R657	2B	R739	3E	U752	2E
CR734	3E	Q682	1B	R662	3A	R740	3C	U800	4G
CR738	3C	Q684	1A	R663	3B	R741	3A	U810	4G
CR750	2E	Q694	2C	R664	2A	R743	2C	U812	4F
CR753	3A	Q702	1H	R665	2A	R744	2C	U814	4E
CR754	3B	Q704	1H	R666	3A	R752	2F	U816	3E
CR764	1E	Q708	1G	R667	3B	R753	3B	U818	3F
		Q714	2F	R668	2A	R754	3B	U820	3G
J608	5E	Q718	2F	R671	2C	R760	1E	U824	3F
J838	3F	Q722	3F	R672	2B	R761	1E	U828	4F
		Q732	3E	R673	2C	R762	1F	U838	3G
L800	5G	Q734	3E	R674	1D	R764	1F		
		Q736	3D	R675	1C	R765	1F	Y800	4G
P510	2D	Q738	3C	R676	2B	R766	1G		

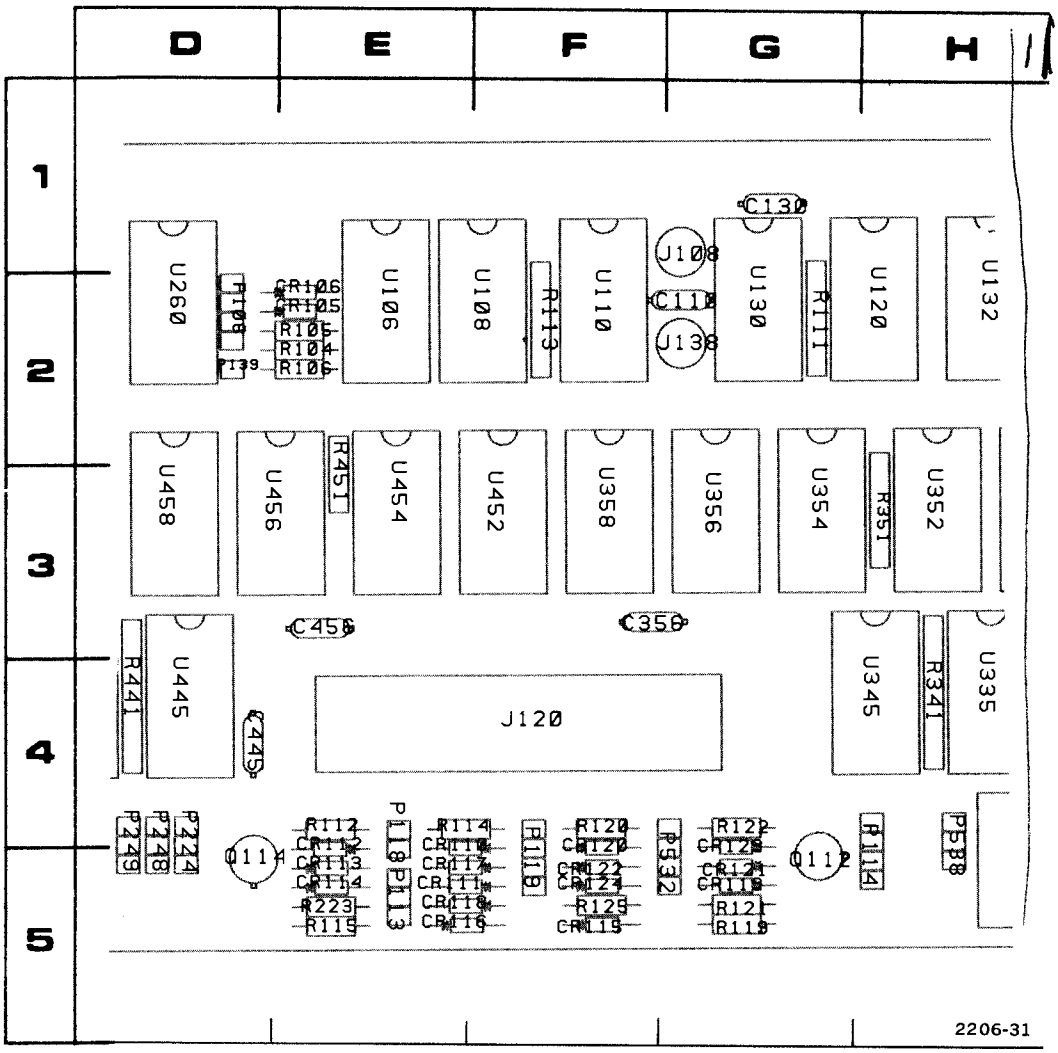

COMPONENT LOCATIONS AS VIEWED WITH BOARD INSTALLED. FOR VIEW OF COMPONENT SIDE OF BOARD, SEE FIGURE 8-3 IN THIS SECTION.

Figure 8-11. Partial A2—Memory circuit board. Component locations as viewed with board installed.

CKT NO	GRID COORD	CKT NO	GRID COORD	CKT NO	GRID COORD	CKT NO	GRID COORD	CKT NO	GRID COORD	CKT NO	GRID COORD	CKT NO	GRID COORD
C107	5B	CR118	5E	P139	2D	R108	5B	R361	2C	U235	4I	U460	2C
C110	2G	CR119	5G	P212	5J	R111	2G	R421	4C	U245	4J	U535	4B
C130	1G	CR120	4F	P213	5J	R112	4E	R441	4D	U252	3J	U545	4B
C150	1I	CR121	5G	P224	4D	R113	2F	R451	3E	U254	3J	U552	3C
C252	3K	CR122	5F	P225	4D	R114	4E	R461	2B	U256	3I	U554	3C
C356	3F	CR123	4G	P236	5J	R115	5E	R521	4C	U258	3H	U556	3B
C445	4D	CR124	5F	P237	5J	R119	5G	R531	4B	U260	2D	U558	3B
C456	3E			P248	4D	R120	4F	R541	4A	U268	5A	U560	2B
C560	1A	DL224	5I	P249	4D	R121	5G	R551	3C	U269	5B	U570	2C
C911	4A	DL424	5C	P350	4K	R122	4G	R561	2A	U335	4H	U572	2B
C935	4K			P532	5G	R125	5F			U345	4H		
		J108	1G	P538	4H	R141	3A	U106	2E	U352	3H		
CR105	2E	J120	4F	P550	1K	R150	2J	U108	2F	U354	3G		
CR106	2E	J138	2G	P911	3A	R151	3B	U110	2F	U356	3G		
CR110	4E					R221	4I	U120	2H	U358	3F		
CR111	5E	P106	2D	Q112	5G	R223	5E	U130	2G	U425	4C		
CR112	4E	P107	4B	Q114	5D	R241	4J	U132	2H	U435	4C		
CR113	5E	P112	3K			R251	3J	U132	2H	U445	4D		
CR114	5E	P113	5E	R104	2E	R261	2C	U136	2I	U452	3F		
CR115	5F	P114	4H	R105	2E	R321	4H	U140	2J	U454	3E		
CR116	5E	P118	4E	R106	2E	R341	4H	U150	2I	U456	3D		
CR117	5E	P119	5F	R107	5B	R351	3H	U225	4I	U458	3D		

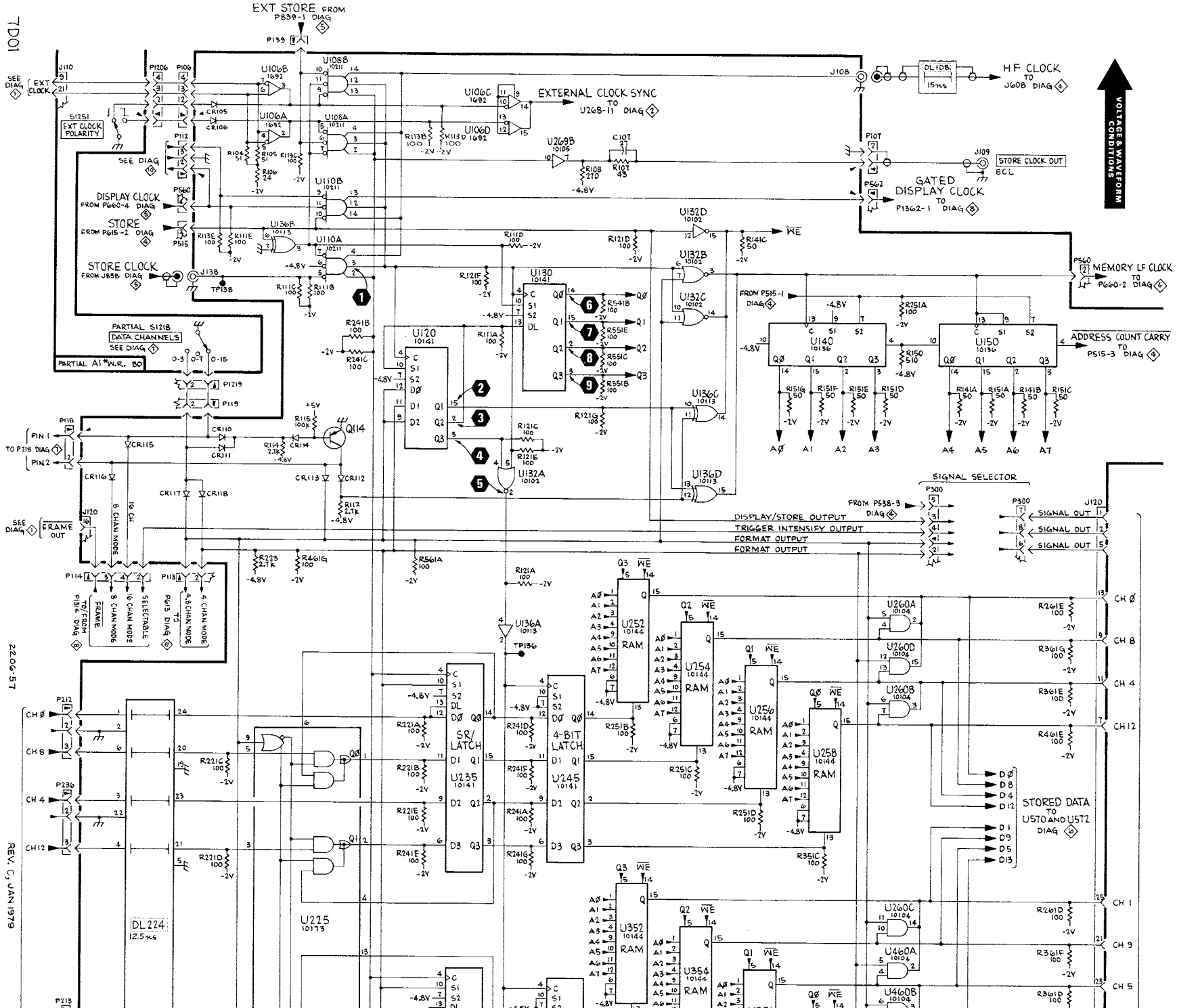
7D01
2206-57
REV. C, JAN 1976
EXT STORE FROM P839-1 DIAG 5
EXT CLOCK
EXT CLOCK POLARITY
S1251
SEE DIAG 10
DISPLAY CLOCK FROM P660-4 DIAG 5
STORE FROM P615-2 DIAG 4
STORE CLOCK FROM J838 DIAG 5
PARTIAL S121B
DATA CHANNELS
SEE DIAG 7
PARTIAL A1 W.R. BD
EXTERNAL CLOCK SYNC TO U268-11 DIAG 2
HF CLOCK TO J608 DIAG 4
DL 108 15ns
STORE CLOCK OUT ECL
GATED DISPLAY CLOCK TO P1362-1 DIAG 8
VOLTAGE & WAVEFORM CONDITIONS
MEMORY LF CLOCK TO P660-2 DIAG 4
ADDRESS COUNT CARRY TO P515-3 DIAG 4
FROM P515-1 DIAG 4
PIN 1
PIN 2
TO P718 DIAG 7
FRAME OUT
SEE DIAG 7
8 CHAN MODE
16 CH
FRAME
8 CHAN MODE
16 CHAN MODE
SELECTABLE
4 CHAN MODE
TO P613 DIAG 6
SIGNAL SELECTOR
FROM P538-3 DIAG 4
DISPLAY/STORE OUTPUT
TRIGGER INTENSIFY OUTPUT
FORMAT OUTPUT
FORMAT OUTPUT
SIGNAL OUT
SIGNAL OUT
SIGNAL OUT
CH Ø
CH 8
CH 4
CH 12
CH 1
CH 9
CH 5
DL 224
12.5ns
SR/ LATCH
4-BIT LATCH
RAM
STORED DATA TO U570 AND U572 DIAG 6

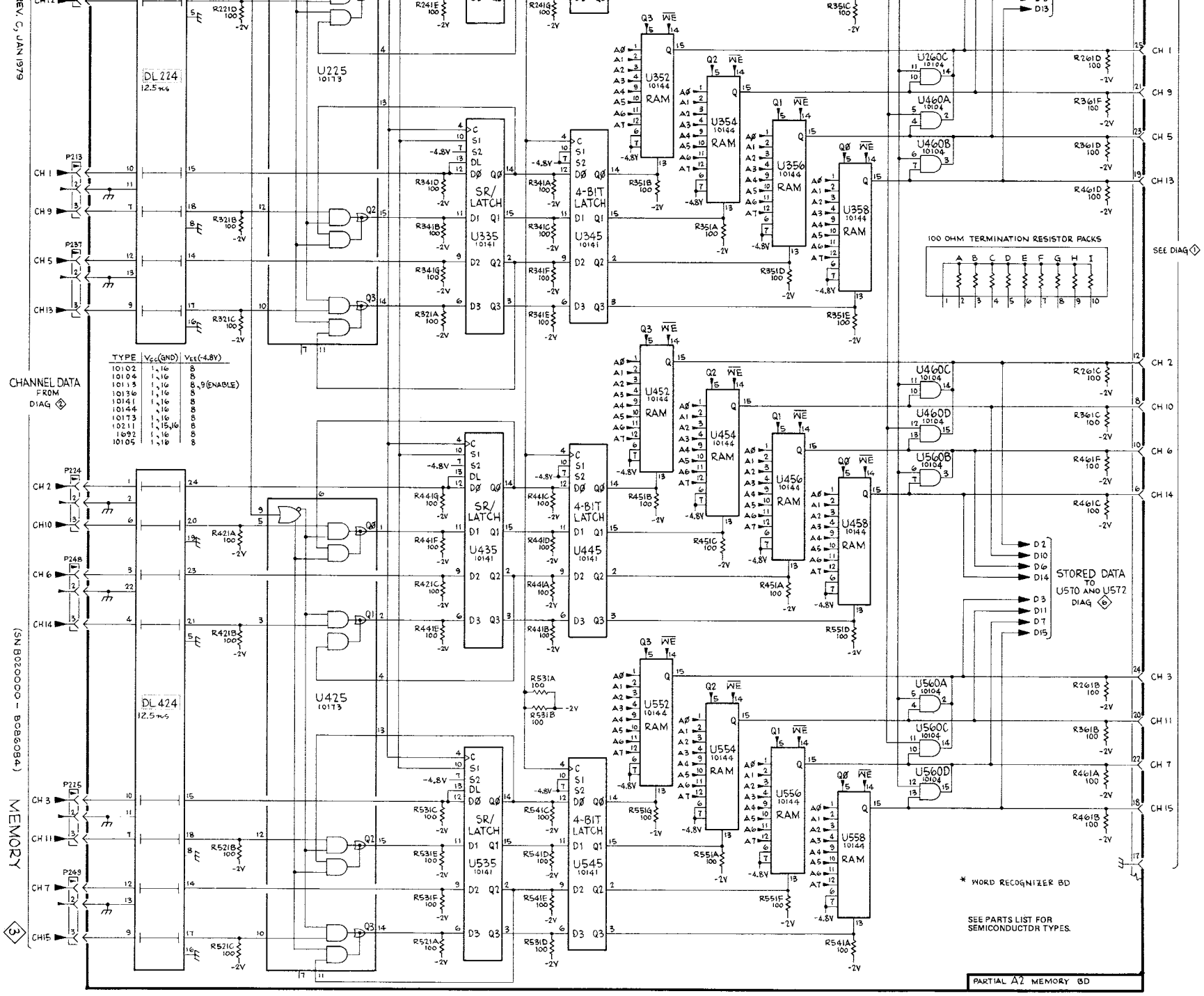

MEMORY
(SN B020000 – B086084)
3

7D01 (SN B020000 & up)

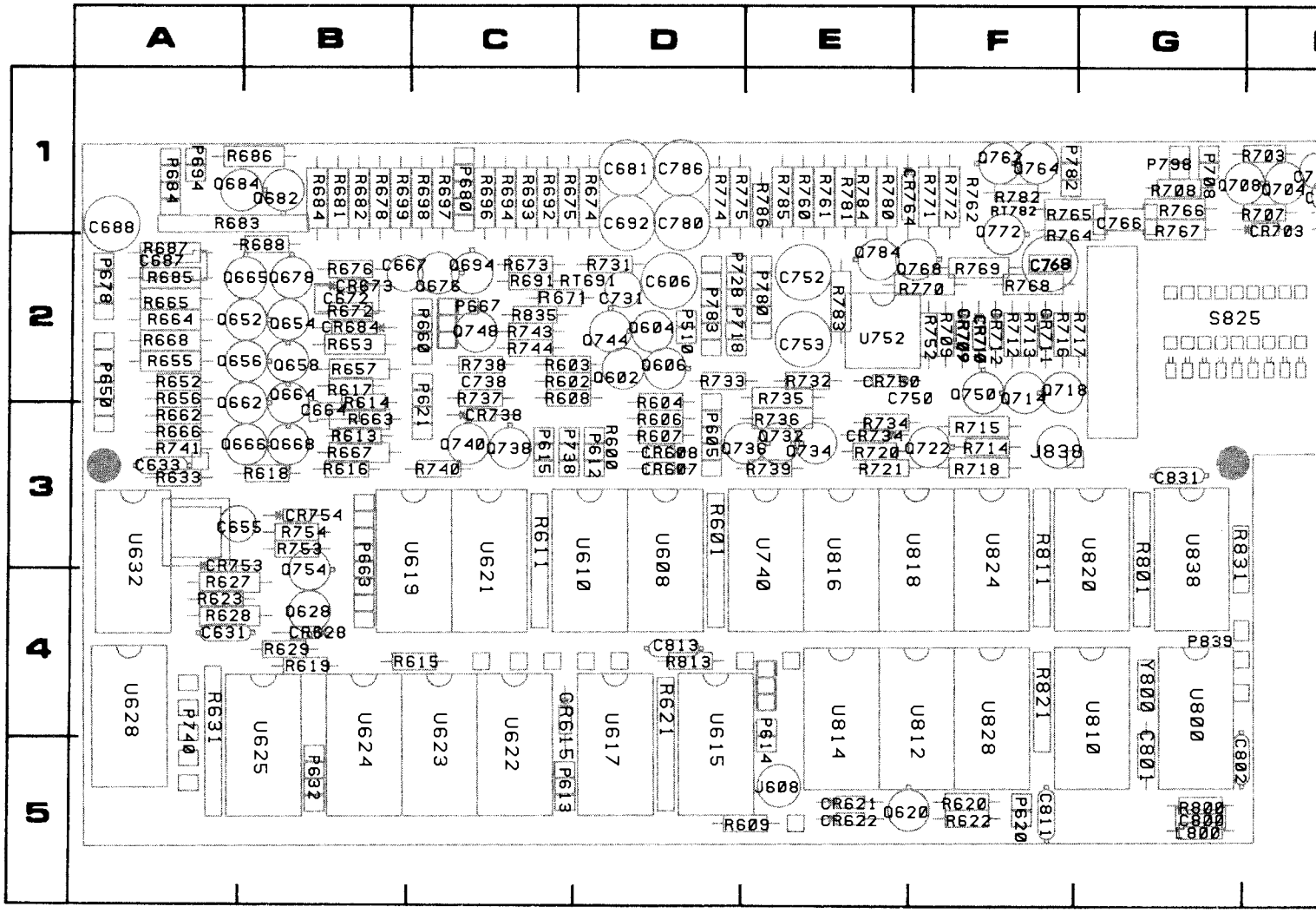
A
B
C
D
E
F
G
1
2
3
4
5
S825
U632
U619
U621
U610
U608
U740
U816
U818
U824
U820
U838
U628
U625
U624
U623
U622
U617
U615
U814
U812
U828
U810
U800
U752
J838
J608
Y800
P839
C831
C813
R813
R615
R609
R619
R629
C631
R628
R627
R623
CR754
R754
R753
CR753
Q754
Q628
CR628
C655
R611
R601
R811
R801
R831
R621
R631
R821
R620
R622
CR621
CR622
Q620
P620
C811
C801
C802
R800
C800
L800
P614
P613
CR615
P632
P740
P668
P621
P615
P738
P612
P605
P510
P783
P718
P780
P782
P798
P708
P678
P680
P650
P660
P672
P684
P694
P696
P697
P698
P699
P682
P681
P675
P674
P693
P692
P785
P761
P781
P784
P771
P772
P774
P775
P786
P766
P767
P769
P768
P770
P752
P709
P711
P712
P713
P716
P717
P718
P714
P722
P721
P720
P734
P736
P739
P733
P732
P735
P604
P606
P607
P608
P602
P603
P608
P743
P744
P738
P737
P748
P667
P835
P691
P671
P673
P676
P687
P685
P665
P664
P668
P655
P652
P656
P662
P666
P741
P633
P618
P616
P617
P614
P613
P663
P667
P657
P658
P664
P654
P653
P684
P672
P673
P675
P678
P676
P694
P696
P697
P698
P699
P682
P681
P680
P693
P692
P675
P674
P686
P683
P688

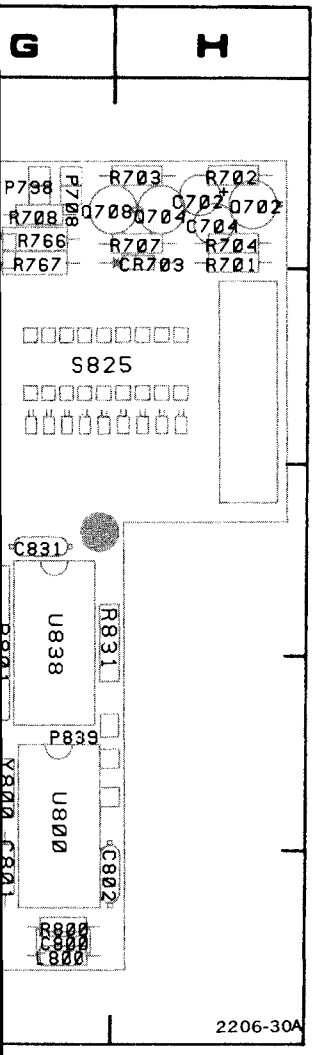

5 IN THIS SECTION.

CKT NO	GRID COORD	CKT NO	GRID COORD	CKT NO	GRID COORD	CKT NO	GRID COORD	CKT NO	GRID COORD
C606	2D	P605	3D	Q740	3C	R678	1B	R767	1G
C631	4A	P612	3D	Q744	2D	R681	1B	R768	2F
C633	3A	P613	5C	Q748	2C	R682	1B	R769	2F
C655	3A	P614	4E	Q750	2F	R683	1A	R770	2F
C664	3B	P615	3C	Q754	3B	R684	1B	R771	1F
C667	2B	P620	5F	Q762	1F	R685	2A	R772	1F
C672	2B	P621	2C	Q764	1F	R686	1A	R774	1D
C681	1D	P632	5B	Q768	2F	R687	2A	R775	1D
C687	2A	P650	2A	Q772	1F	R688	2B	R780	1E
C688	1A	P660	2C	Q784	2E	R691	2C	R781	1E
C692	1D	P663	3B			R692	1C	R782	1F
C702	1H	P667	2C	R600	3D	R693	1C	R783	2E
C704	1H	P678	2A	R601	3D	R694	1C	R784	1E
C731	2D	P680	1C	R602	2C	R696	1C	R785	1E
C738	2C	P684	1A	R603	2C	R697	1C	R786	1E
C750	2E	P694	1A	R604	2D	R698	1C	R800	5G
C752	2E	P708	1G	R606	3D	R699	1B	R801	3G
C753	2E	P718	2D	R607	3D	R701	1H	R811	3F
C766	1G	P738	3C	R608	2C	R702	1H	R813	4D
C768	2F	P740	4A	R609	5D	R703	1H	R821	4F
C780	1D	P780	2E	R611	3C	R704	1H	R831	3G
C786	1D	P782	1F	R613	3B	R707	1H	R835	2C
C800	5G	P783	2D	R614	2B	R708	1G		
C801	5G	P798	1G	R615	4B	R709	2F	RT691	2C
C802	5G	P839	4G	R616	3B	R712	2F	RT782	1F
C811	5F			R617	2B	R713	2F		
C813	4D	Q602	2D	R618	3B	R714	3F	S825	2G
C831	3G	Q604	2D	R619	4B	R715	3F		
CR607	3D	Q606	2D	R620	5F	R716	2F	U608	3D
CR608	3D	Q620	5E	R621	4D	R717	2F	U610	3D
CR615	4C	Q628	4B	R622	5F	R718	3F	U615	5D
CR621	5E	Q652	2A	R623	4A	R720	3E	U617	5D
CR622	5E	Q654	2B	R627	4A	R721	3E	U619	3C
CR628	4B	Q656	2A	R628	4A	R731	2D	U621	3C
CR673	2B	Q658	2B	R629	4B	R732	2E	U622	5C
CR684	2B	Q662	2A	R631	4A	R733	2D	U623	5C
CR703	1H	Q664	2B	R633	3A	R734	3E	U624	5B
CR709	2F	Q665	2A	R652	2A	R735	2E	U625	5B
CR710	2F	Q666	3A	R653	2B	R736	3E	U628	4A
CR711	2F	Q668	3B	R655	2A	R737	2C	U632	3A
CR712	2F	Q676	2C	R656	2A	R738	2C	U740	3E
CR717	2F	Q678	2B	R657	2B	R739	3E	U752	2E
CR734	3E	Q682	1B	R662	3A	R740	3C	U800	4G
CR738	3C	Q684	1A	R663	3B	R741	3A	U810	4G
CR750	2E	Q694	2C	R664	2A	R743	2C	U812	4F
CR753	3A	Q702	1H	R665	2A	R744	2C	U814	4E
CR754	3B	Q704	1H	R666	3A	R752	2F	U816	3E
CR764	1E	Q708	1G	R667	3B	R753	3B	U818	3F
		Q714	2F	R668	2A	R754	3B	U820	3G
J608	5E	Q718	2F	R671	2C	R760	1E	U824	3F
J838	3F	Q722	3F	R672	2B	R761	1E	U828	4F
		Q732	3E	R673	2C	R762	1F	U838	3G
L800	5G	Q734	3E	R674	1D	R764	1F		
		Q736	3D	R675	1C	R765	1F	Y800	4G
P510	2D	Q738	3C	R676	2B	R766	1G		

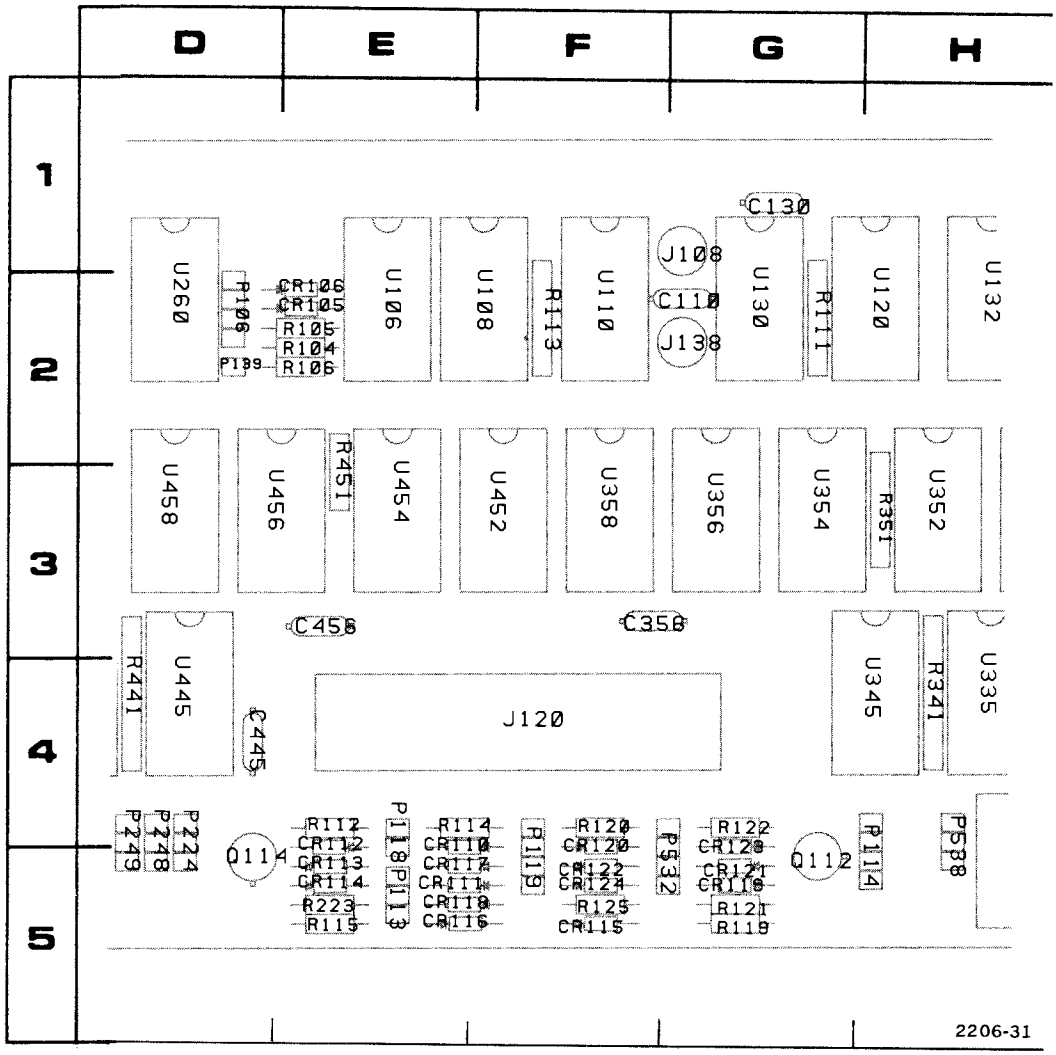

COMPONENT LOCATIONS AS VIEWED WITH BOARD INSTALLED. FOR VIEW OF COMPONENT SIDE OF BOARD, SEE FIGURE 8-3 IN THIS SECTION.

Figure 8-11. Partial A2—Memory circuit board. Component locations as viewed with board installed.

CKT NO	GRID COORD	CKT NO	GRID COORD	CKT NO	GRID COORD	CKT NO	GRID COORD	CKT NO	GRID COORD	CKT NO	GRID COORD	CKT NO	GRID COORD
C107	5B	CR118	5E	P139	2D	R108	5B	R361	2C	U235	4I	U460	2C
C110	2G	CR119	5G	P212	5J	R111	2G	R421	4C	U245	4J	U535	4B
C130	1G	CR120	4F	P213	5J	R112	4E	R441	4D	U252	3J	U545	4B
C150	1I	CR121	5G	P224	4D	R113	2F	R451	3E	U254	3J	U552	3C
C252	3K	CR122	5F	P225	4D	R114	4E	R461	2B	U256	3I	U554	3C
C356	3F	CR123	4G	P236	5J	R115	5E	R521	4C	U258	3H	U556	3B
C445	4D	CR124	5F	P237	5J	R119	5G	R531	4B	U260	2D	U558	3B
C456	3E			P248	4D	R120	4F	R541	4A	U268	5A	U560	2B
C560	1A	DL224	5I	P249	4D	R121	5G	R551	3C	U269	5B	U570	2C
C911	4A	DL424	5C	P350	4K	R122	4G	R561	2A	U335	4H	U572	2B
C935	4K			P532	5G	R125	5F			U345	4H		
		J108	1G	P538	4H	R141	3A	U106	2E	U352	3H		
CR105	2E	J120	4F	P550	1K	R150	2J	U108	2F	U354	3G		
CR106	2E	J138	2G	P911	3A	R151	3B	U110	2F	U356	3G		
CR110	4E					R221	4I	U120	2H	U358	3F		
CR111	5E	P106	2D	Q112	5G	R223	5E	U130	2G	U425	4C		
CR112	4E	P107	4B	Q114	5D	R241	4J	U132	2H	U435	4C		
CR113	5E	P112	3K			R251	3J	U132	2H	U445	4D		
CR114	5E	P113	5E	R104	2E	R261	2C	U136	2I	U452	3F		
CR115	5F	P114	4H	R105	2E	R321	4H	U140	2J	U454	3E		
CR116	5E	P118	4E	R106	2E	R341	4H	U150	2I	U456	3D		
CR117	5E	P119	5F	R107	5B	R351	3H	U225	4I	U458	3D		

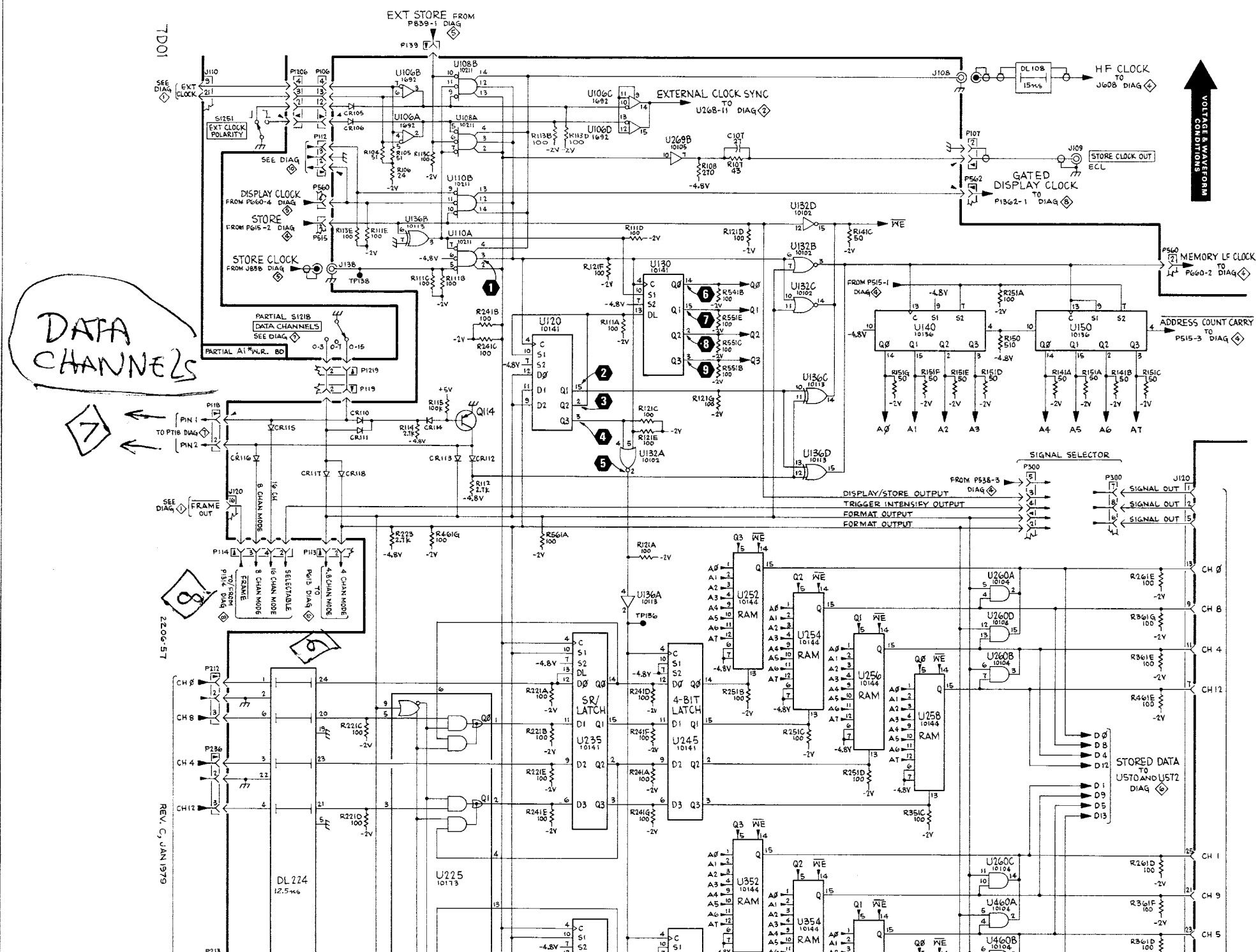
7D01
EXT STORE FROM P839-1 DIAG
EXTERNAL CLOCK SYNC TO U268-11 DIAG
HF CLOCK TO J608 DIAG
GATED DISPLAY CLOCK TO P1362-1 DIAG
STORE CLOCK OUT ECL
MEMORY LF CLOCK TO P660-2 DIAG
ADDRESS COUNT CARRY TO P515-3 DIAG
DISPLAY CLOCK FROM P660-4 DIAG
STORE FROM P615-2 DIAG
STORE CLOCK FROM J838 DIAG
EXT CLOCK
EXT CLOCK POLARITY
PARTIAL S121B DATA CHANNELS
PARTIAL A1*N.R. BD
DATA CHANNELS
SIGNAL SELECTOR
DISPLAY/STORE OUTPUT
TRIGGER INTENSIFY OUTPUT
FORMAT OUTPUT
FORMAT OUTPUT
SIGNAL OUT
FRAME OUT
8 CHAN MODE
16 CH
SR/LATCH
4-BIT LATCH
RAM
DL 224
12.5ns
STORED DATA TO U570 AND U572 DIAG
CH Ø
CH 8
CH 4
CH 12
CH 1
CH 9
CH 5
VOLTAGE & WAVEFORM CONDITIONS
REV. C, JAN 1979
2206-57

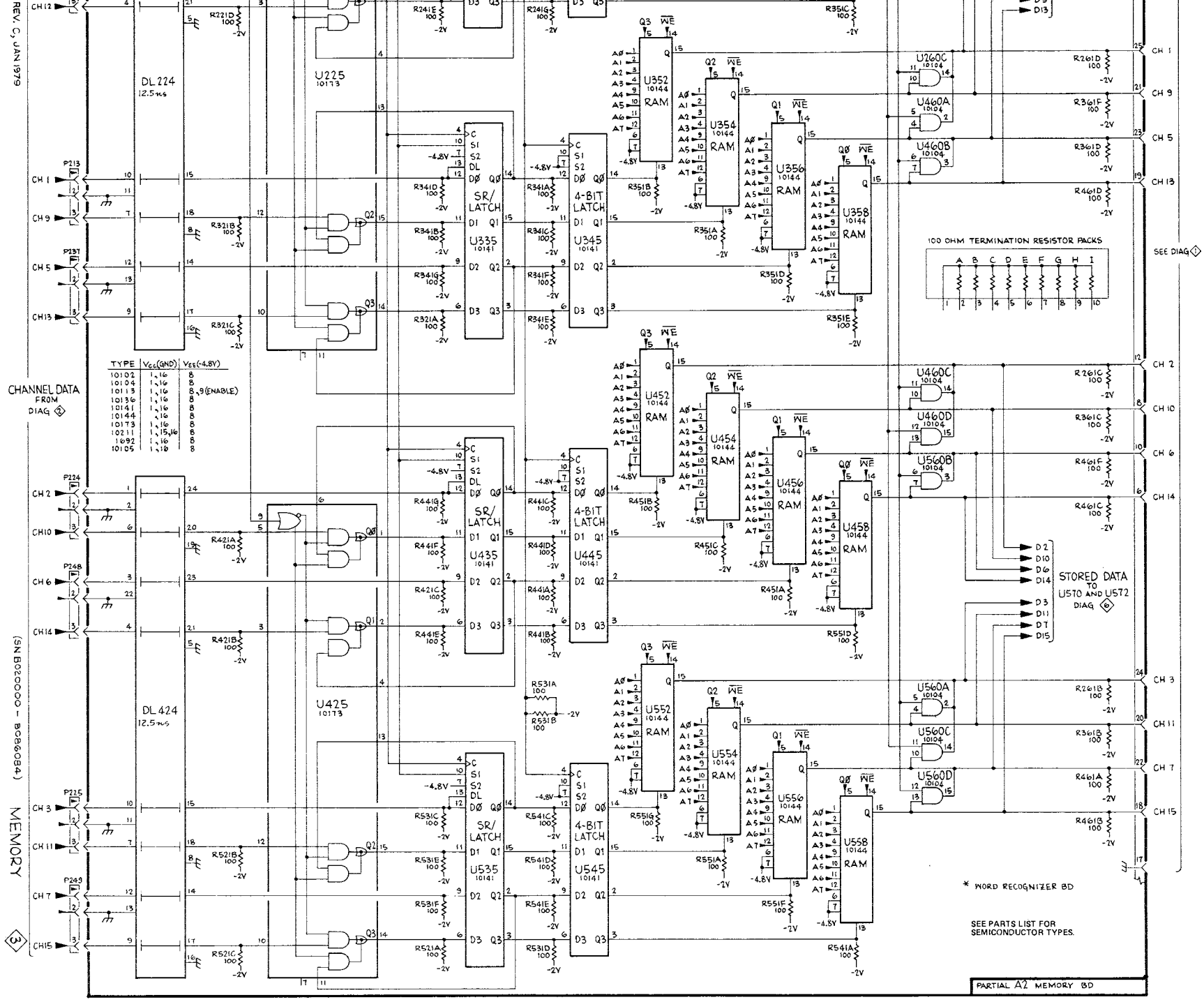

TYPE	V_{CC}(GND)	V_{EE}(-4.8V)
10102	1,16	8
10104	1,16	8
10113	1,16	8,9(ENABLE)
10136	1,16	8
10141	1,16	8
10144	1,16	8
10173	1,16	8
10211	1,15,16	8
1692	1,16	8
10105	1,16	8

MEMORY (SN B020000 – B086084) 3

7D01 (SN B020000 & up)

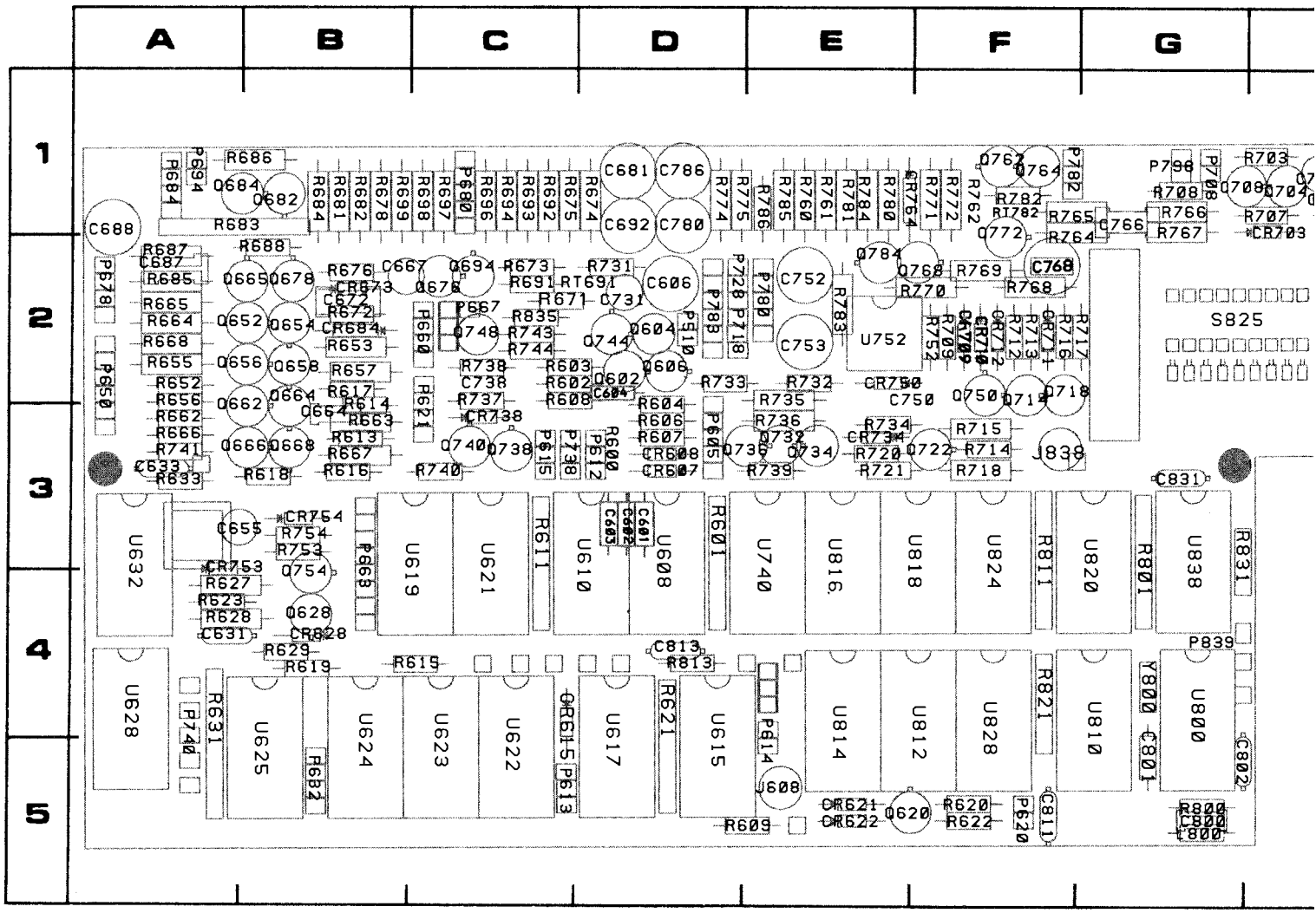

COMPONENT LOCATIONS AS VIEWED WITH BOARD INSTALLED. FOR VIEW OF COMPONENT SIDE OF BOARD, SEE FIGURE 8-5 IN THIS SECTION

Figure 8-10. A3—Output circuit board. Component locations as viewed with board installed.

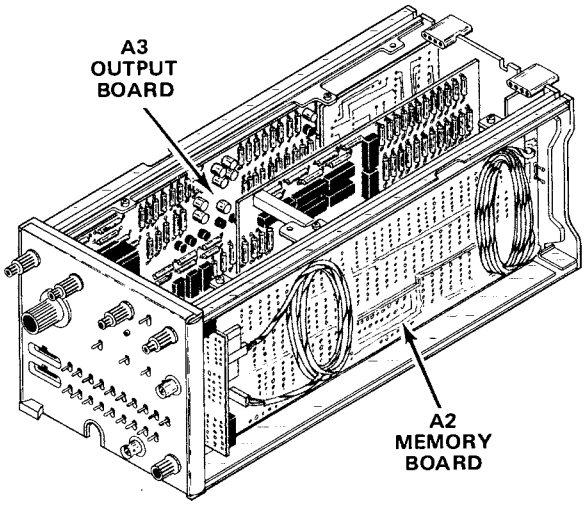

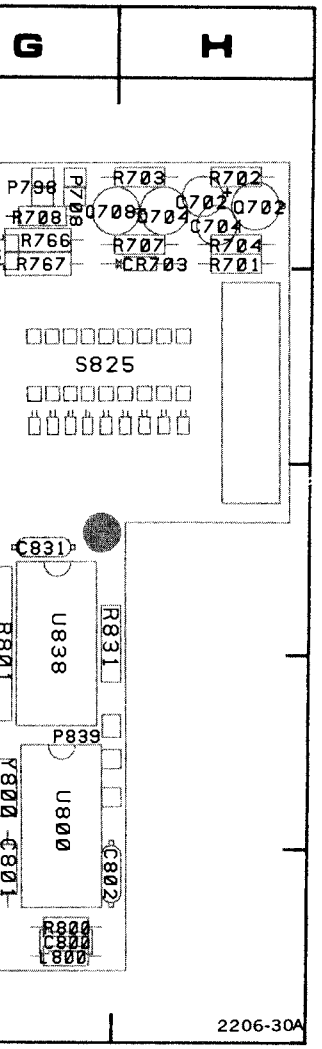

-5 IN THIS SECTION.

CKT NO	GRID COORD	CKT NO	GRID COORD	CKT NO	GRID COORD	CKT NO	GRID COORD	CKT NO	GRID COORD
C601	3D	L800	5G	Q734	3E	R674	1D	R764	1F
C602	3D			Q736	3D	R675	1C	R765	1F
C603	3D	P510	2D	Q738	3C	R676	2B	R766	1G
C604	2D	P605	3D	Q740	3C	R678	1B	R767	1G
C606	2D	P612	3D	Q744	2D	R681	1B	R768	2F
C631	4A	P613	5C	Q748	2C	R682	1B	R769	2F
C633	3A	P614	4E	Q750	2F	R683	1A	R770	2F
C655	3A	P615	3C	Q754	3B	R684	1B	R771	1F
C664	3B	P620	5F	Q762	1F	R685	2A	R772	1F
C667	2B	P621	2C	Q764	1F	R686	1A	R774	1D
C672	2B	P632	5B	Q768	2F	R687	2A	R775	1D
C681	1D	P650	2A	Q772	1F	R688	2B	R780	1E
C687	2A	P660	2C	Q784	2E	R691	2C	R781	1E
C688	1A	P663	3B			R692	1C	R782	1F
C692	1D	P667	2C	R600	3D	R693	1C	R783	2E
C702	1H	P678	2A	R601	3D	R694	1C	R784	1E
C704	1H	P680	1C	R602	2C	R696	1C	R785	1E
C731	2D	P684	1A	R603	2C	R697	1C	R786	1E
C738	2C	P694	1A	R604	2D	R698	1C	R800	5G
C750	2E	P708	1G	R606	3D	R699	1B	R801	3G
C752	2E	P718	2D	R607	3D	R701	1H	R811	3F
C753	2E	P738	3C	R608	2C	R702	1H	R813	4D
C766	1G	P740	4A	R609	5D	R703	1H	R821	4F
C768	2F	P780	2E	R611	3C	R704	1H	R831	3G
C780	1D	P782	1F	R613	3B	R707	1H	R835	2C
C786	1D	P783	2D	R614	2B	R708	1G		
C800	5G	P798	1G	R615	4B	R709	2F	RT691	2C
C801	5G	P839	4G	R616	3B	R712	2F	RT782	1F
C802	5G			R617	2B	R713	2F	S825	2G
C811	5F	Q602	2D	R618	3B	R714	3F		
C813	4D	Q604	2D	R619	4B	R715	3F	U608	3D
C831	3G	Q606	2D	R620	5F	R716	2F	U610	3D
CR607	3D	Q620	5E	R621	4D	R717	2F	U615	5D
CR608	3D	Q628	4B	R622	5F	R718	3F	U617	5D
CR615	4C	Q652	2A	R623	4A	R720	3E	U619	3C
CR621	5E	Q654	2B	R627	4A	R721	3E	U621	3C
CR622	5E	Q656	2A	R628	4A	R731	2D	U622	5C
CR628	4B	Q658	2B	R629	4B	R732	2E	U623	5C
CR673	2B	Q662	2A	R631	4A	R733	2D	U624	5B
CR684	2B	Q664	2B	R633	3A	R734	3E	U625	5B
CR703	1H	Q665	2A	R652	2A	R735	2E	U628	4A
CR709	2F	Q666	3A	R653	2B	R736	3E	U632	3A
CR710	2F	Q668	3B	R655	2A	R737	2C	U740	3E
CR711	2F	Q676	2C	R656	2A	R738	2C	U752	2E
CR712	2F	Q678	2B	R657	2B	R739	3E	U800	4G
CR717	2F	Q682	1B	R662	3A	R740	3C	U810	4G
CR734	3E	Q684	1A	R663	3B	R741	3A	U812	4F
CR738	3C	Q694	2C	R664	2A	R743	2C	U814	4E
CR750	2E	Q702	1H	R665	2A	R744	2C	U816	3E
CR753	3A	Q704	1H	R666	3A	R752	2F	U818	3F
CR754	3B	Q708	1G	R667	3B	R753	3B	U820	3G
CR764	1E	Q714	2F	R668	2A	R754	3B	U824	3F
		Q718	2F	R671	2C	R760	1E	U828	4F
J608	5E	Q722	3F	R672	2B	R761	1E	U838	3G
J838	3F	Q732	3E	R673	2C	R762	1F		
								Y800	4G

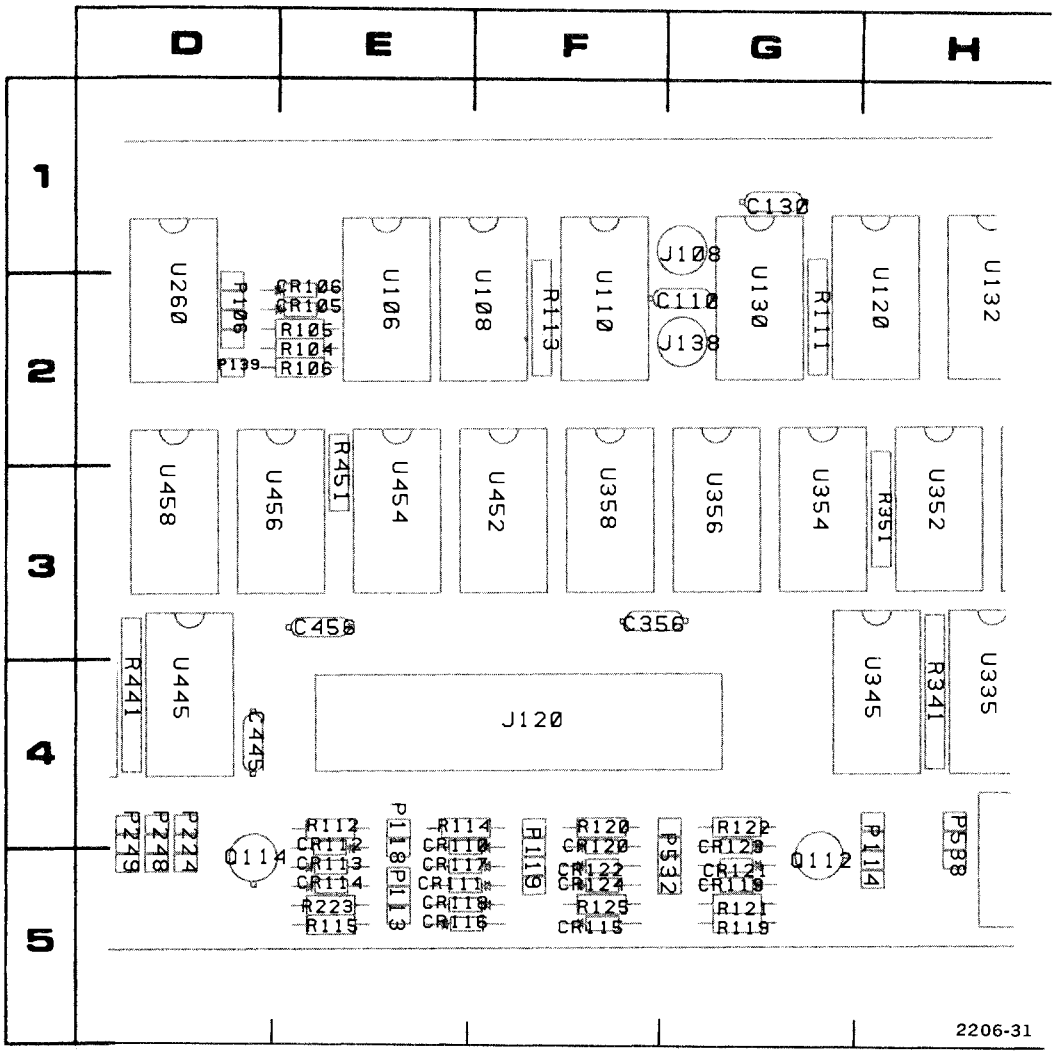

COMPONENT LOCATIONS AS VIEWED WITH BOARD INSTALLED. FOR VIEW OF COMPONENT SIDE OF BOARD, SEE FIGURE 8-3 IN THIS SECTION.

Figure 8-11. Partial A2—Memory circuit board. Component locations as viewed with board installed.

CKT NO	GRID COORD	CKT NO	GRID COORD	CKT NO	GRID COORD	CKT NO	GRID COORD	CKT NO	GRID COORD	CKT NO	GRID COORD	CKT NO	GRID COORD
C107	5B	CR118	5E	P139	2D	R108	5B	R361	2C	U235	4I	U460	2C
C110	2G	CR119	5G	P212	5J	R111	2G	R421	4C	U245	4J	U535	4B
C130	1G	CR120	4F	P213	5J	R112	4E	R441	4D	U252	3J	U545	4B
C150	1I	CR121	5G	P224	4D	R113	2F	R451	3E	U254	3J	U552	3C
C252	3K	CR122	5F	P225	4D	R114	4E	R461	2B	U256	3I	U554	3C
C356	3F	CR123	4G	P236	5J	R115	5E	R521	4C	U258	3H	U556	3B
C445	4D	CR124	5F	P237	5J	R119	5G	R531	4B	U260	2D	U558	3B
C456	3E			P248	4D	R120	4F	R541	4A	U268	5A	U560	2B
C560	1A	DL224	5I	P249	4D	R121	5G	R551	3C	U269	5B	U570	2C
C911	4A	DL424	5C	P350	4K	R122	4G	R561	2A	U335	4H	U572	2B
C935	4K			P532	5G	R125	5F			U345	4H		
		J108	1G	P538	4H	R141	3A	U106	2E	U352	3H		
CR105	2E	J120	4F	P550	1K	R150	2J	U108	2F	U354	3G		
CR106	2E	J138	2G	P911	3A	R151	3B	U110	2F	U356	3G		
CR110	4E					R221	4I	U120	2H	U358	3F		
CR111	5E	P106	2D	Q112	5G	R223	5E	U130	2G	U425	4C		
CR112	4E	P107	4B	Q114	5D	R241	4J	U132	2H	U435	4C		
CR113	5E	P112	3K			R251	3J	U132	2H	U445	4D		
CR114	5E	P113	5E	R104	2E	R261	2C	U136	2I	U452	3F		
CR115	5F	P114	4H	R105	2E	R321	4H	U140	2J	U454	3E		
CR116	5E	P118	4E	R106	2E	R341	4H	U150	2I	U456	3D		
CR117	5E	P119	5F	R107	5B	R351	3H	U225	4I	U458	3D		

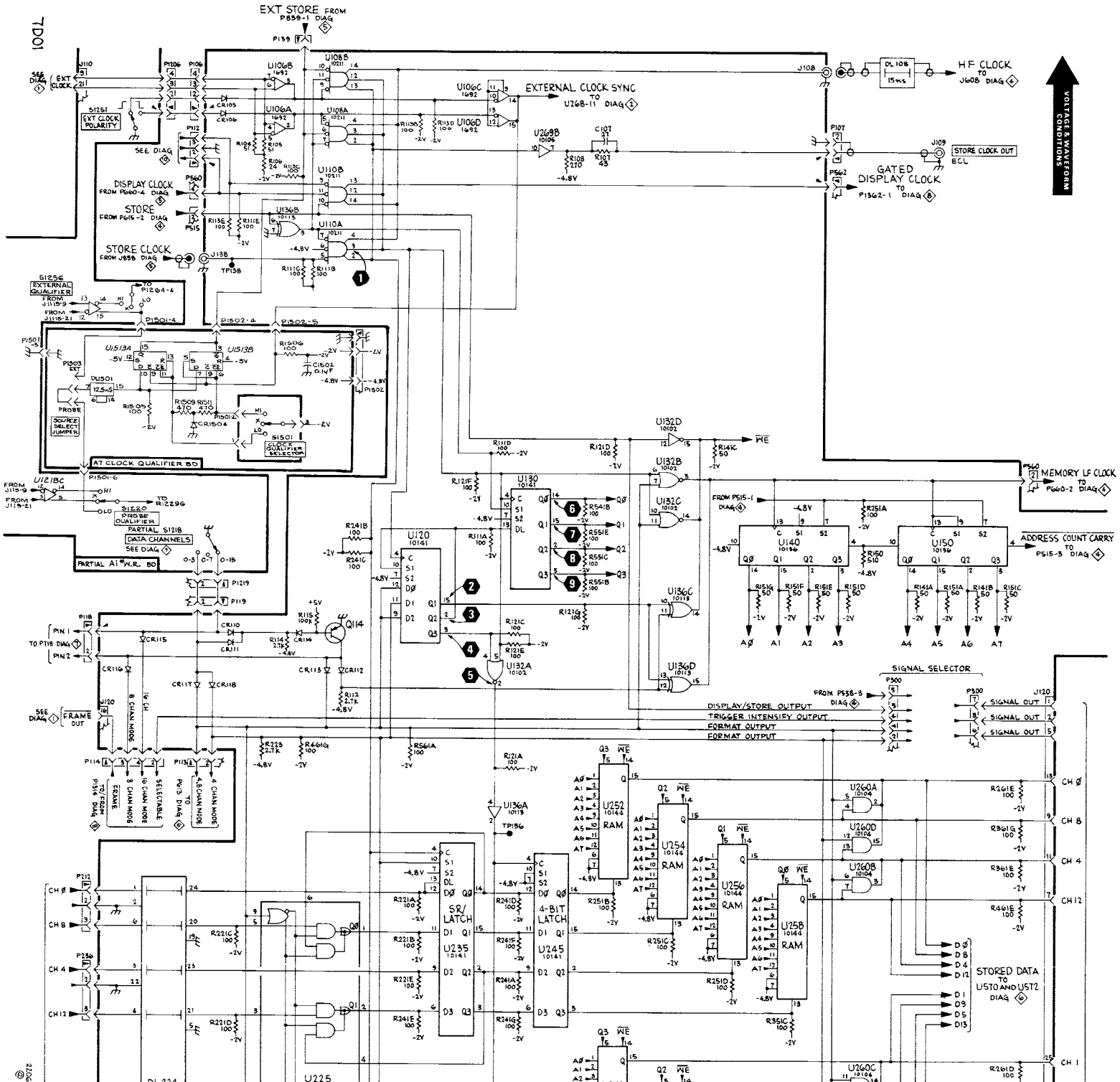
7D01
EXT STORE FROM P859-1 DIAG
EXTERNAL CLOCK SYNC TO U268-11 DIAG
HF CLOCK TO J608 DIAG
STORE CLOCK OUT
GATED DISPLAY CLOCK TO P1362-1 DIAG
DISPLAY CLOCK FROM P660-4 DIAG
STORE FROM P615-2 DIAG
STORE CLOCK FROM J858 DIAG
EXT CLOCK POLARITY
EXTERNAL QUALIFIER
AT CLOCK QUALIFIER BD
PROBE QUALIFIER
DATA CHANNELS
PARTIAL A1*W.R. BD
MEMORY LF CLOCK TO P660-2 DIAG
ADDRESS COUNT CARRY TO P515-3 DIAG
SIGNAL SELECTOR
DISPLAY/STORE OUTPUT
TRIGGER INTENSIFY OUTPUT
FORMAT OUTPUT
FORMAT OUTPUT
SIGNAL OUT
SIGNAL OUT
SIGNAL OUT
FRAME OUT
8 CHAN MODE
16 CHAN MODE
SELECTABLE
4 CHAN MODE
SR/ LATCH
4-BIT LATCH
RAM
STORED DATA TO U570 AND U572 DIAG
CH Ø
CH 8
CH 4
CH 12
CH 1
VOLTAGE & WAVEFORM CONDITIONS

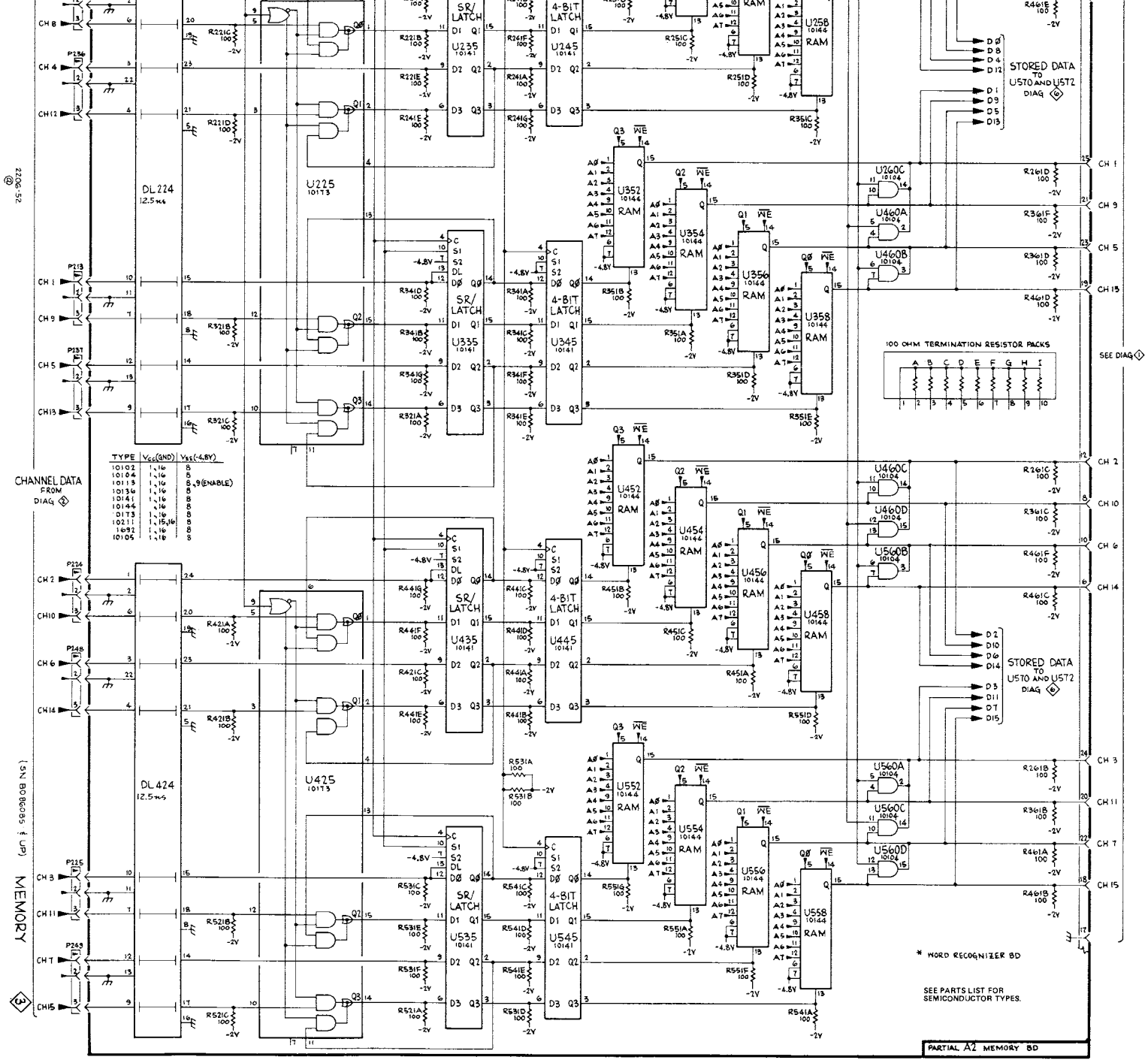

MEMORY WITH CLOCK
QUALIFIER (SN B086085 & UP)

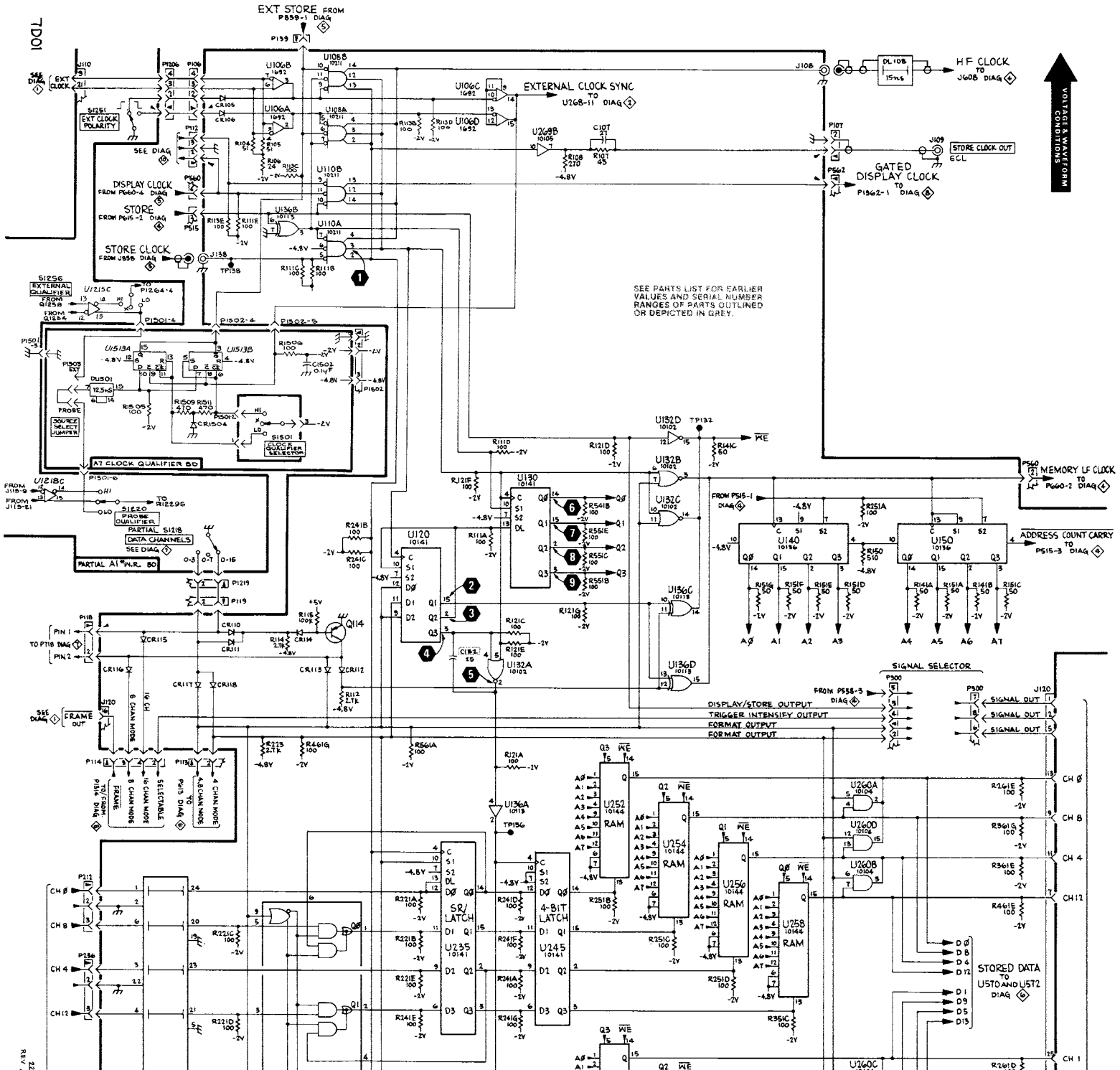
7D01
EXT STORE FROM P859-1 DIAG
EXTERNAL CLOCK SYNC TO U268-11 DIAG
HF CLOCK TO J608 DIAG
STORE CLOCK OUT ECL
GATED DISPLAY CLOCK TO P1562-1 DIAG
DISPLAY CLOCK FROM P660-4 DIAG
STORE FROM P615-2 DIAG
STORE CLOCK FROM J855 DIAG
EXT CLOCK POLARITY
EXTERNAL QUALIFIER
A7 CLOCK QUALIFIER 50
PROBE QUALIFIER
DATA CHANNELS
PARTIAL A1 W.R. 50
CLOCK QUALIFIER SELECTOR
SOURCE SELECT JUMPER
MEMORY LF CLOCK TO P660-2 DIAG
ADDRESS COUNT CARRY TO P515-3 DIAG
SIGNAL SELECTOR
DISPLAY/STORE OUTPUT
TRIGGER INTENSIFY OUTPUT
FORMAT OUTPUT
FORMAT OUTPUT
SIGNAL OUT
SIGNAL OUT
SIGNAL OUT
FRAME OUT
STORED DATA TO U570 AND U572 DIAG
SR/LATCH
4-BIT LATCH
RAM
VOLTAGE & WAVEFORM CONDITIONS
SEE PARTS LIST FOR EARLIER VALUES AND SERIAL NUMBER RANGES OF PARTS OUTLINED OR DEPICTED IN GREY.

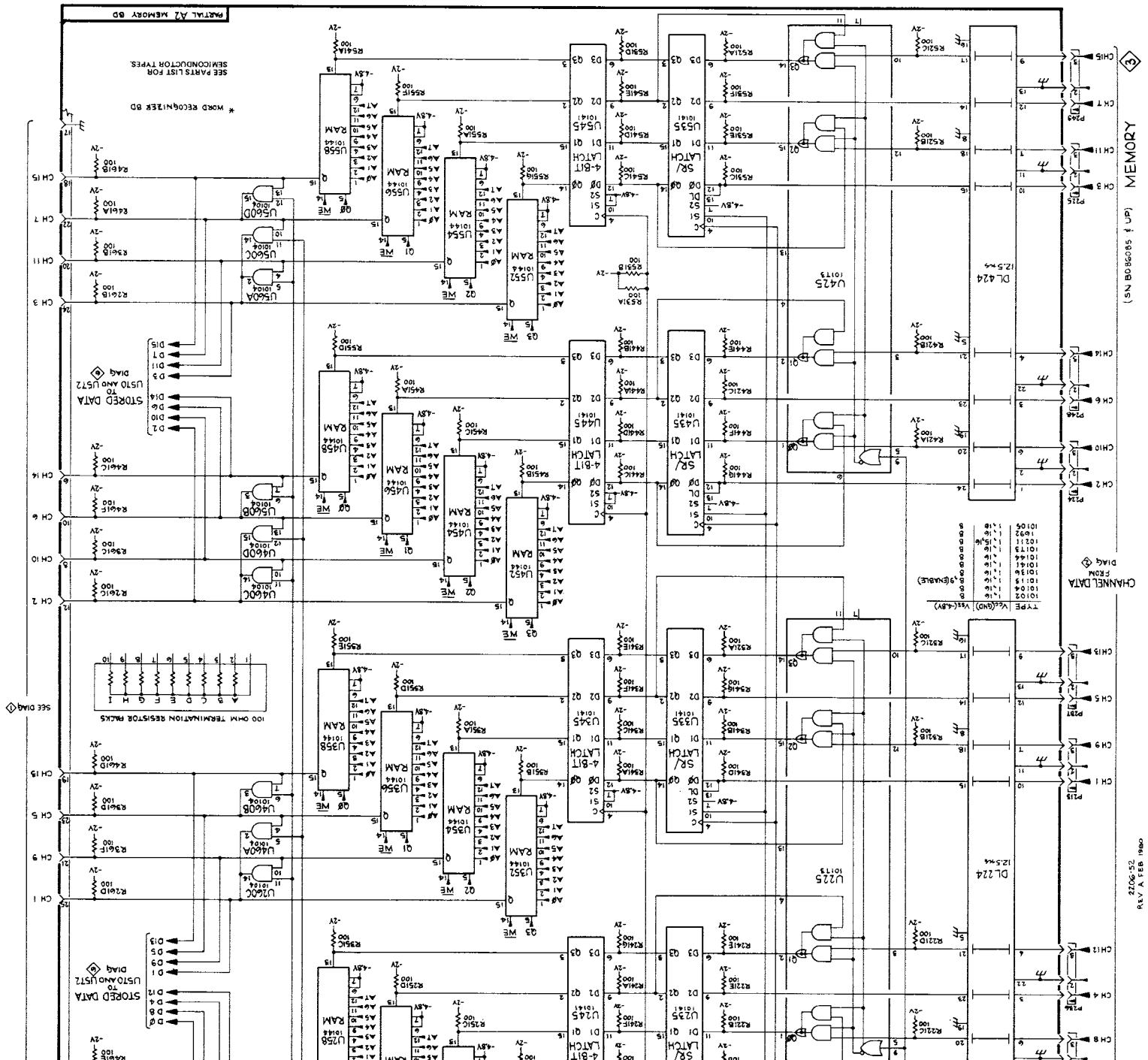
MEMORY
(SN B086085 & UP)
CHANNEL DATA FROM DIAG 4
TYPE
V_{CC}(GND)
V_{EE}(-4.8V)
DL424
12.5-44
DL224
12.5-44
U225
10173
U425
10173
SR/LATCH
4-BIT LATCH
RAM
STORED DATA TO U570 AND U572 DIAG 6
100 OHM TERMINATION RESISTOR PACKS
SEE DIAG 1
* WORD RECOGNIZER BD
SEE PARTS LIST FOR SEMICONDUCTOR TYPES
PARTIAL A2 MEMORY BD
2206-52
REV A FEB 1980

VOLTAGE AND WAVEFORM CONDITIONS

Voltages and Waveforms shown are typical, but may vary between instruments.

TEST SETUP: The 7D01 is connected to the 7000-series mainframe through two 067-0616-00 Flexible Plug-in Extenders. The 7D01 controls are set as follows:

DATA CHANNELS. 0-3
DATA POSITION. . . . . .POST TRIG
SAMPLE INTERVAL . . . . . .0.5 μs
TRIGGER SOURCE . . . . . .CH 0
DISPLAY TIME. . . . . .∞

The Ch 0 probe is connected to a 1 kHz signal source, with the 7D01 THRESHOLD VOLTAGE set appropriately. Waveforms were obtained by pressing the DISPLAY TIME MANUAL pushbutton and triggering the waveform display on the transition shown in the center of the top trace of each waveform display.

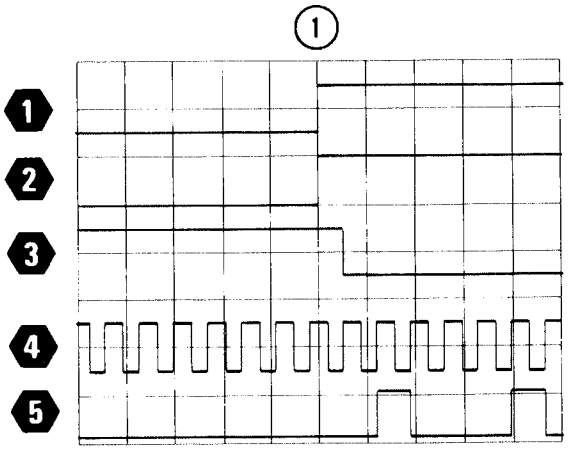

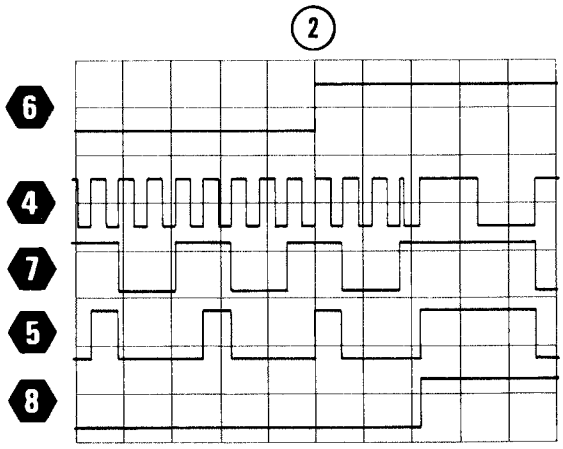

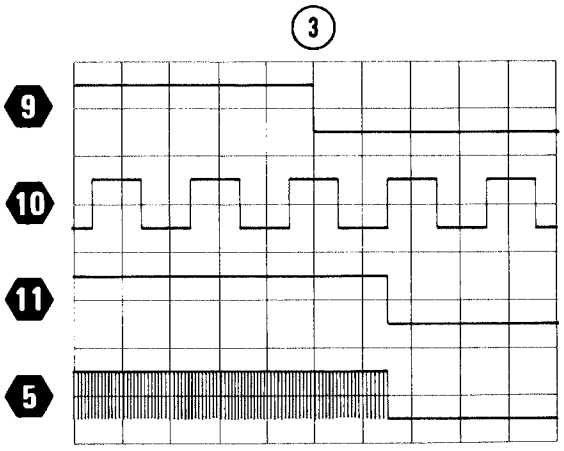

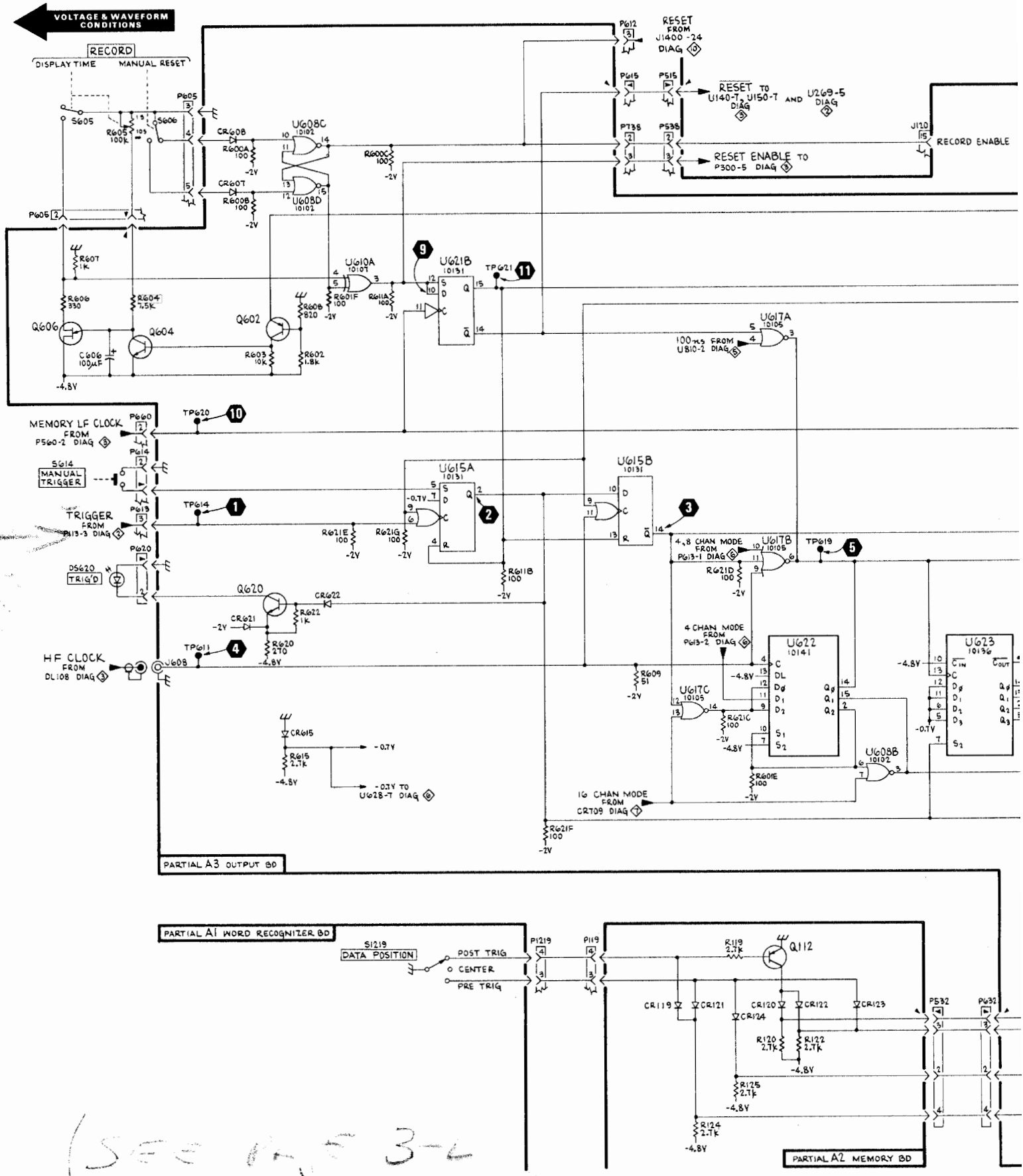

(SEE PAGE 3-6 BLOCK DIAGRAM)

7D01

REV. A, MAR 77

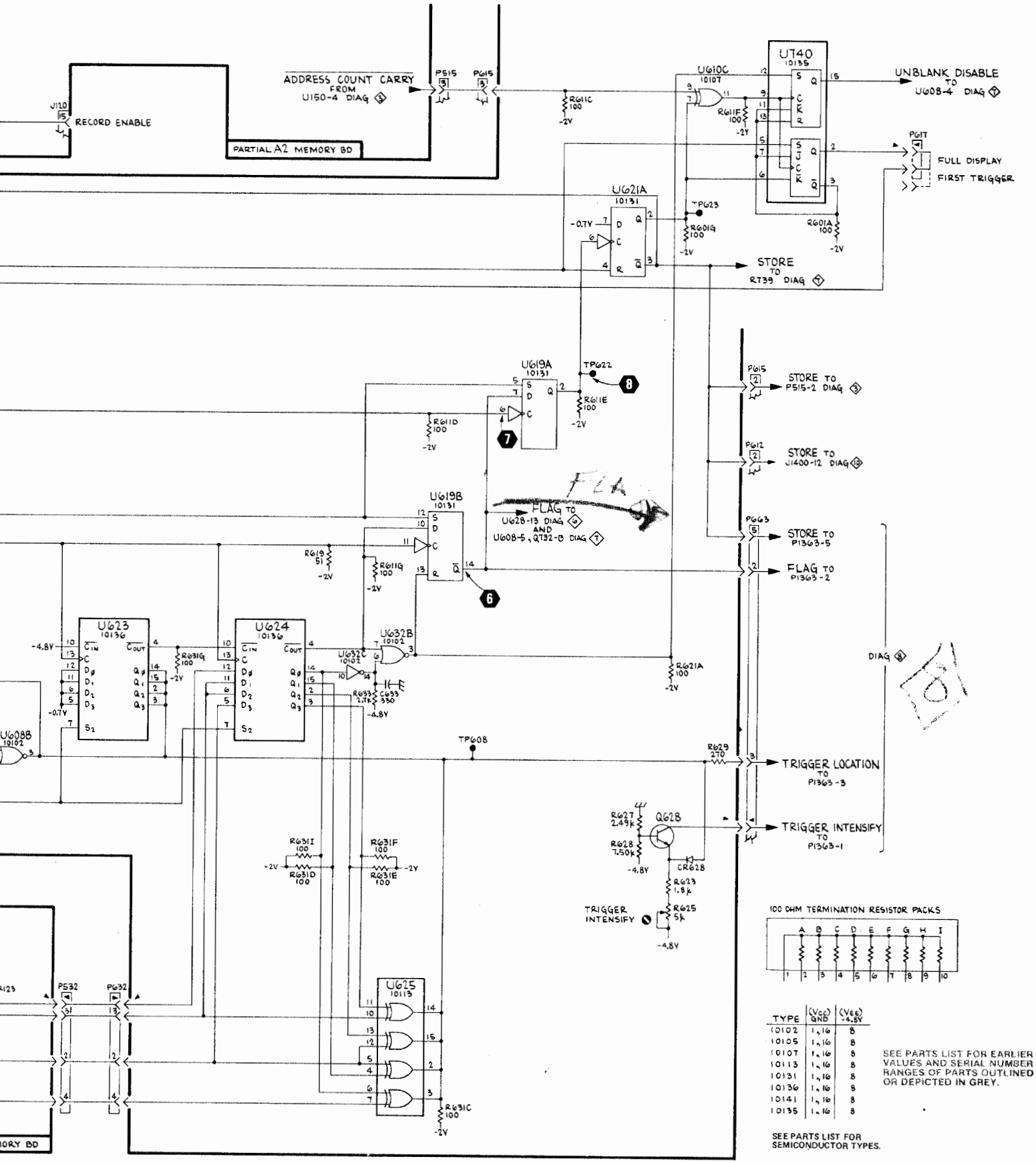

TYPE	(Vcc) GND	(VEE) -4.8V
10102	1, 16	8
10105	1, 16	8
10107	1, 16	8
10113	1, 16	8
10131	1, 16	8
10136	1, 16	8
10141	1, 16	8
10135	1, 16	8

SEE PARTS LIST FOR EARLIER VALUES AND SERIAL NUMBER RANGES OF PARTS OUTLINED OR DEPICTED IN GREY.

SEE PARTS LIST FOR SEMICONDUCTOR TYPES.

(SN B020000 & UP)

TRIGGER 4

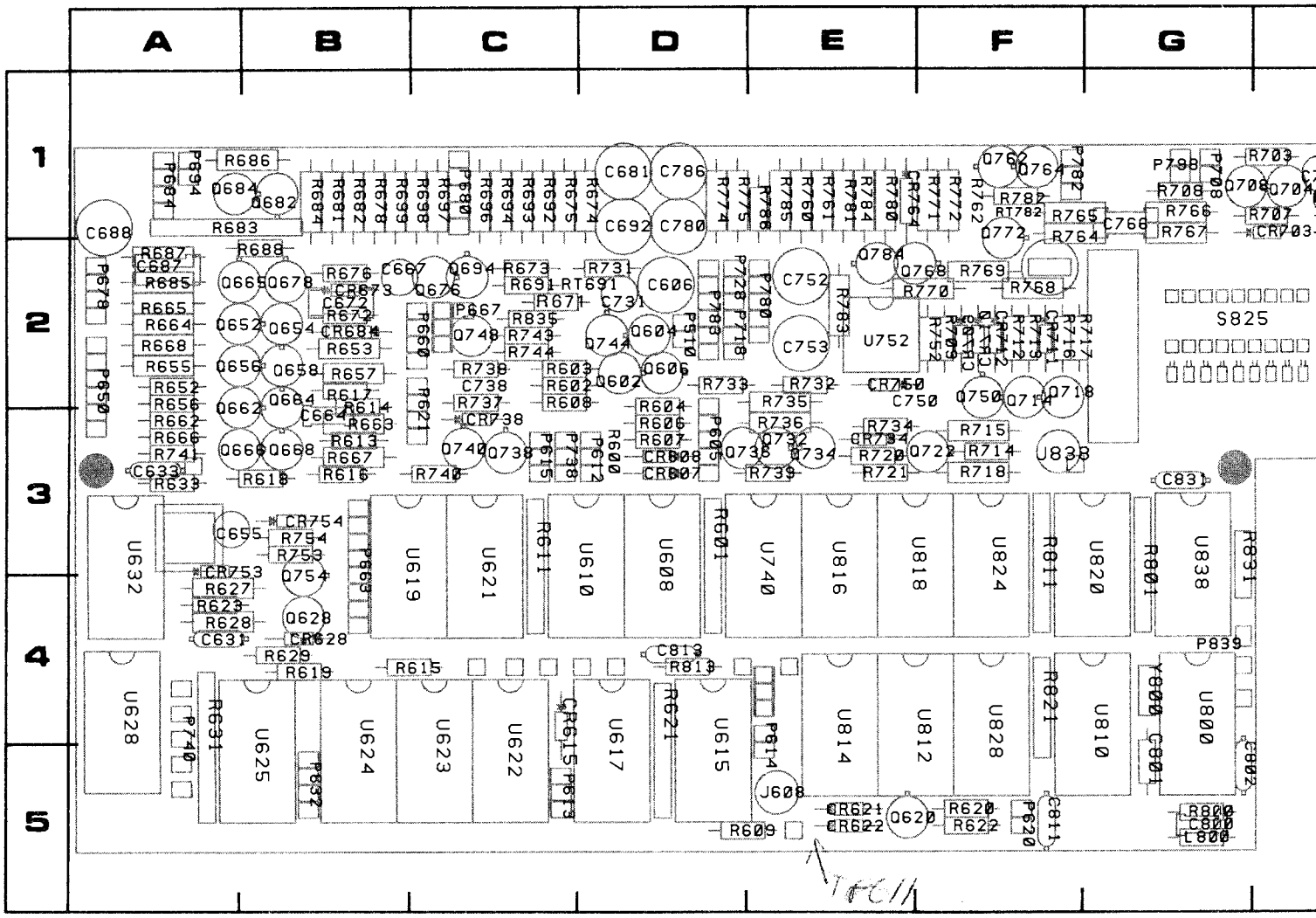

COMPONENT LOCATIONS AS VIEWED WITH BOARD INSTALLED. FOR VIEW OF COMPONENT SIDE OF BOARD, SEE FIGURE 8-5 IN THIS SECTIO

Figure 8-12. A3—Output circuit board. Component locations as viewed with board installed.

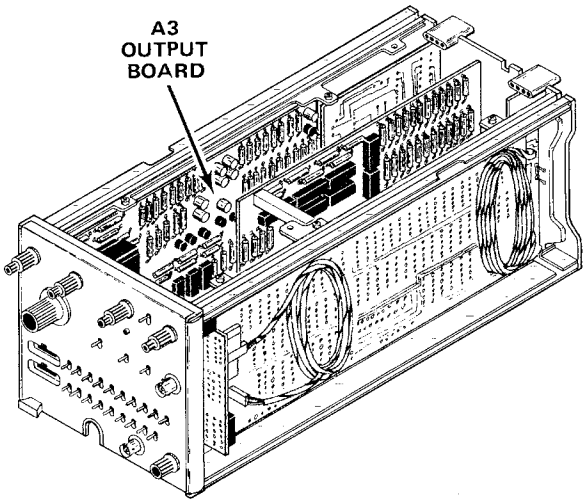

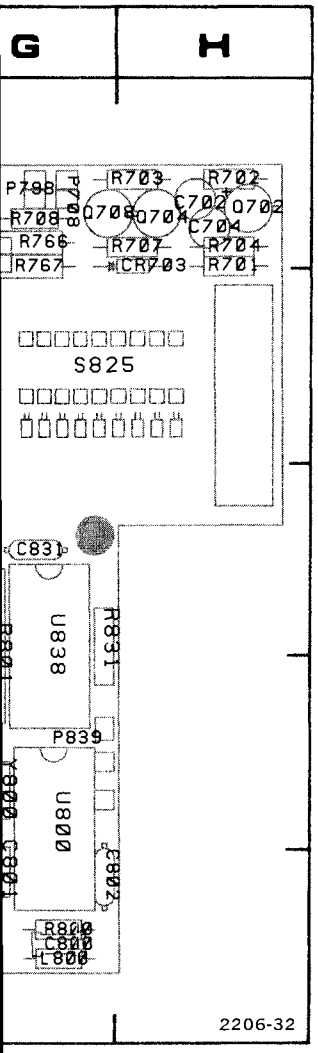

8-5 IN THIS SECTION.

CKT NO	GRID COORD	CKT NO	GRID COORD	CKT NO	GRID COORD	CKT NO	GRID COORD	CKT NO	GRID COORD
C606	2D	P605	3D	Q740	3C	R678	1B	R767	1G
C631	4A	P612	3D	Q744	2D	R681	1B	R768	2F
C633	3A	P613	5C	Q748	2C	R682	1B	R769	2F
C655	3A	P614	4E	Q750	2F	R683	1A	R770	2F
C664	3B	P615	3C	Q754	3B	R684	1B	R771	1F
C667	2B	P620	5F	Q762	1F	R685	2A	R772	1F
C672	2B	P621	2C	Q764	1F	R686	1A	R774	1D
C681	1D	P632	5B	Q768	2F	R687	2A	R775	1D
C687	2A	P650	2A	Q772	1F	R688	2B	R780	1E
C688	1A	P660	2C	Q784	2E	R691	2C	R781	1E
C692	1D	P663	3B			R692	1C	R782	1F
C702	1H	P667	2C	R600	3D	R693	1C	R783	2E
C704	1H	P678	2A	R601	3D	R694	1C	R784	1E
C731	2D	P680	1C	R602	2C	R696	1C	R785	1E
C738	2C	P684	1A	R603	2C	R697	1C	R786	1E
C750	2E	P694	1A	R604	2D	R698	1C	R800	5G
C752	2E	P708	1G	R606	3D	R699	1B	R801	3G
C753	2E	P718	2D	R607	3D	R701	1H	R811	3F
C766	1G	P738	3C	R608	2C	R702	1H	R813	4D
C780	1D	P740	4A	R609	5D	R703	1H	R821	4F
C786	1D	P780	2E	R611	3C	R704	1H	R831	3G
C800	5G	P782	1F	R613	3B	R707	1H	R835	2C
C801	5G	P783	2D	R614	2B	R708	1G		
C802	5G	P798	1G	R615	4B	R709	2F	RT691	2C
C811	5F	P839	4G	R616	3B	R712	2F	RT782	1F
C813	4D			R617	2B	R713	2F		
C831	3G	Q602	2D	R618	3B	R714	3F	S825	2G
		Q604	2D	R619	4B	R715	3F		
CR607	3D	Q606	2D	R620	5F	R716	2F	U608	3D
CR608	3D	Q620	5E	R621	4D	R717	2F	U610	3D
CR615	4C	Q628	4B	R622	5F	R718	3F	U615	5D
CR621	5E	Q652	2A	R623	4A	R720	3E	U617	5D
CR622	5E	Q654	2B	R627	4A	R721	3E	U619	3C
CR628	4B	Q656	2A	R628	4A	R731	2D	U621	3C
CR673	2B	Q658	2B	R629	4B	R732	2E	U622	5C
CR684	2B	Q662	2A	R631	4A	R733	2D	U623	5C
CR703	1H	Q664	2B	R633	3A	R734	3E	U624	5B
CR709	2F	Q665	2A	R652	2A	R735	2E	U625	5B
CR710	2F	Q666	3A	R653	2B	R736	3E	U628	4A
CR711	2F	Q668	3B	R655	2A	R737	2C	U632	3A
CR712	2F	Q676	2C	R656	2A	R738	2C	U740	3E
CR717	2F	Q678	2B	R657	2B	R739	3E	U752	2E
CR734	3E	Q682	1B	R662	3A	R740	3C	U800	4G
CR738	3C	Q684	1A	R663	3B	R741	3A	U810	4G
CR750	2E	Q694	2C	R664	2A	R743	2C	U812	4F
CR753	3A	Q702	1H	R665	2A	R744	2C	U814	4E
CR754	3B	Q704	1H	R666	3A	R752	2F	U816	3E
CR764	1E	Q708	1G	R667	3B	R753	3B	U818	3F
		Q714	2F	R668	2A	R754	3B	U820	3G
J608	5E	Q718	2F	R671	2C	R760	1E	U824	3F
J838	3F	Q722	3F	R672	2B	R761	1E	U828	4F
		Q732	3E	R673	2C	R762	1F	U838	3G
L800	5G	Q734	3E	R674	1D	R764	1F		
		Q736	3D	R675	1C	R765	1F	Y800	4G
P510	2D	Q738	3C	R676	2B	R766	1G		

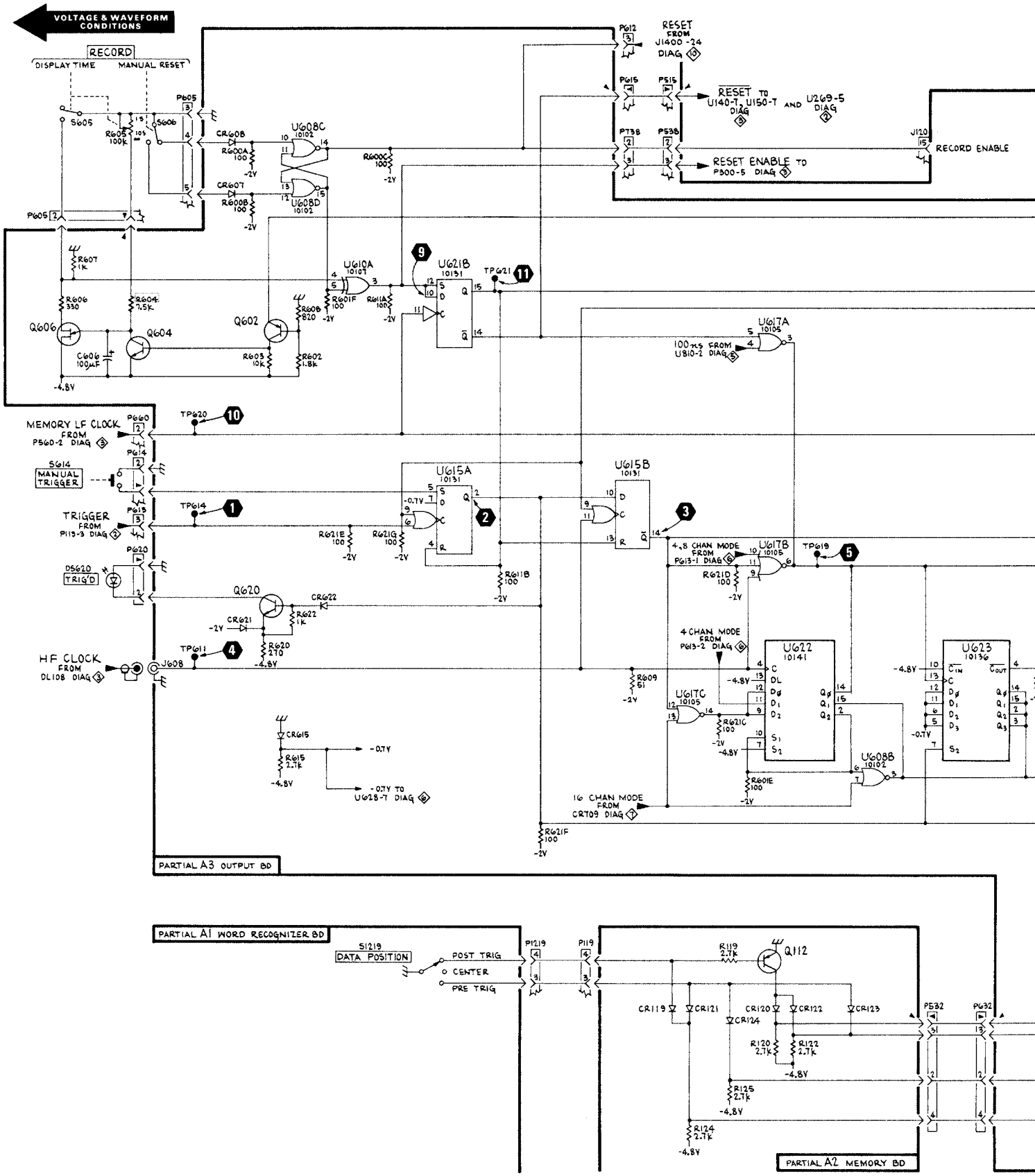

7D01

REV. B, JUNE 1978

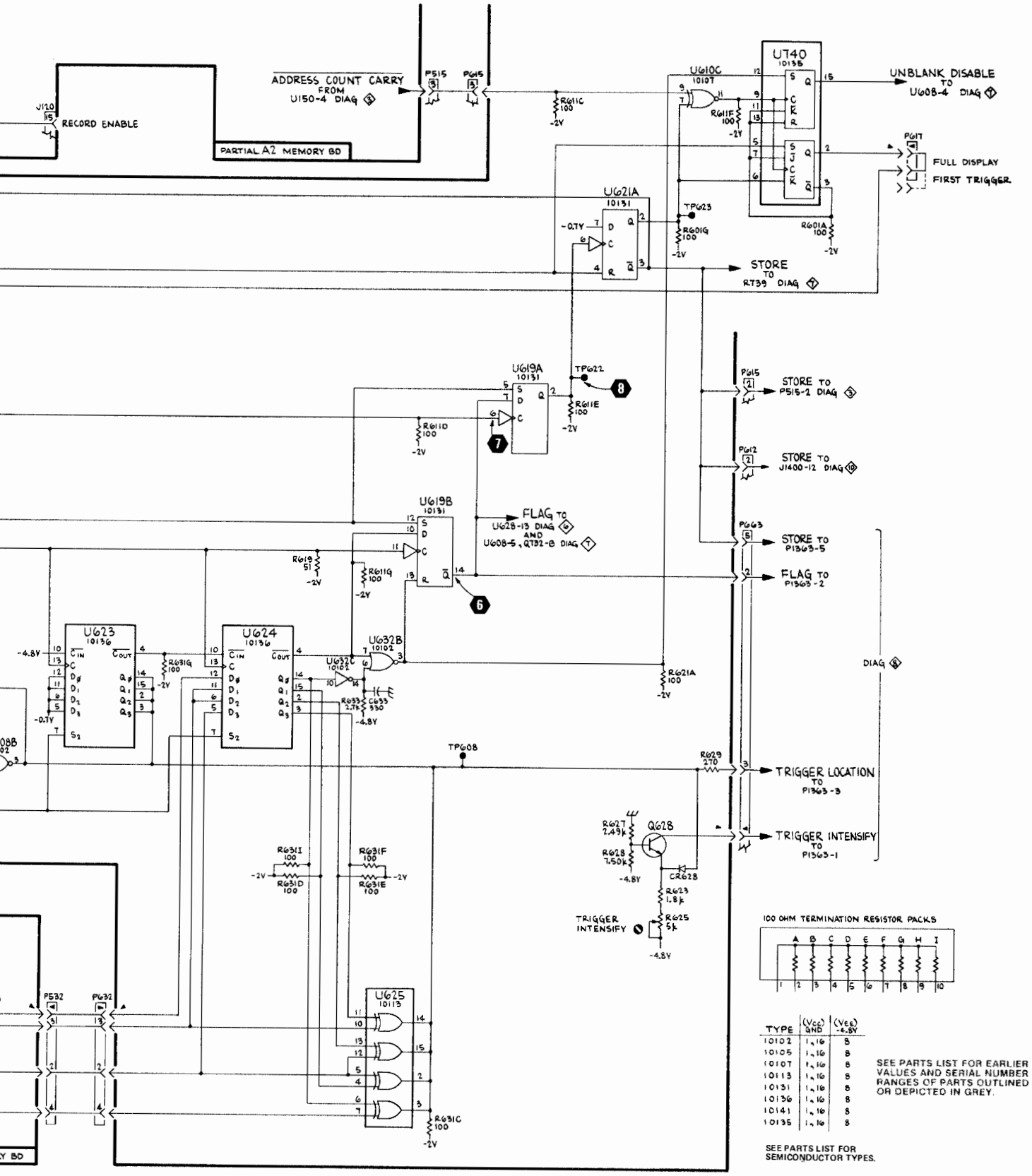

100 OHM TERMINATION RESISTOR PACKS

TYPE	(Vcc) GND	(VEE) -4.5V
10102	1, 16	8
10105	1, 16	8
10107	1, 16	8
10113	1, 16	8
10131	1, 16	8
10136	1, 16	8
10141	1, 16	8
10135	1, 16	8

SEE PARTS LIST FOR EARLIER VALUES AND SERIAL NUMBER RANGES OF PARTS OUTLINED OR DEPICTED IN GREY.

SEE PARTS LIST FOR SEMICONDUCTOR TYPES.

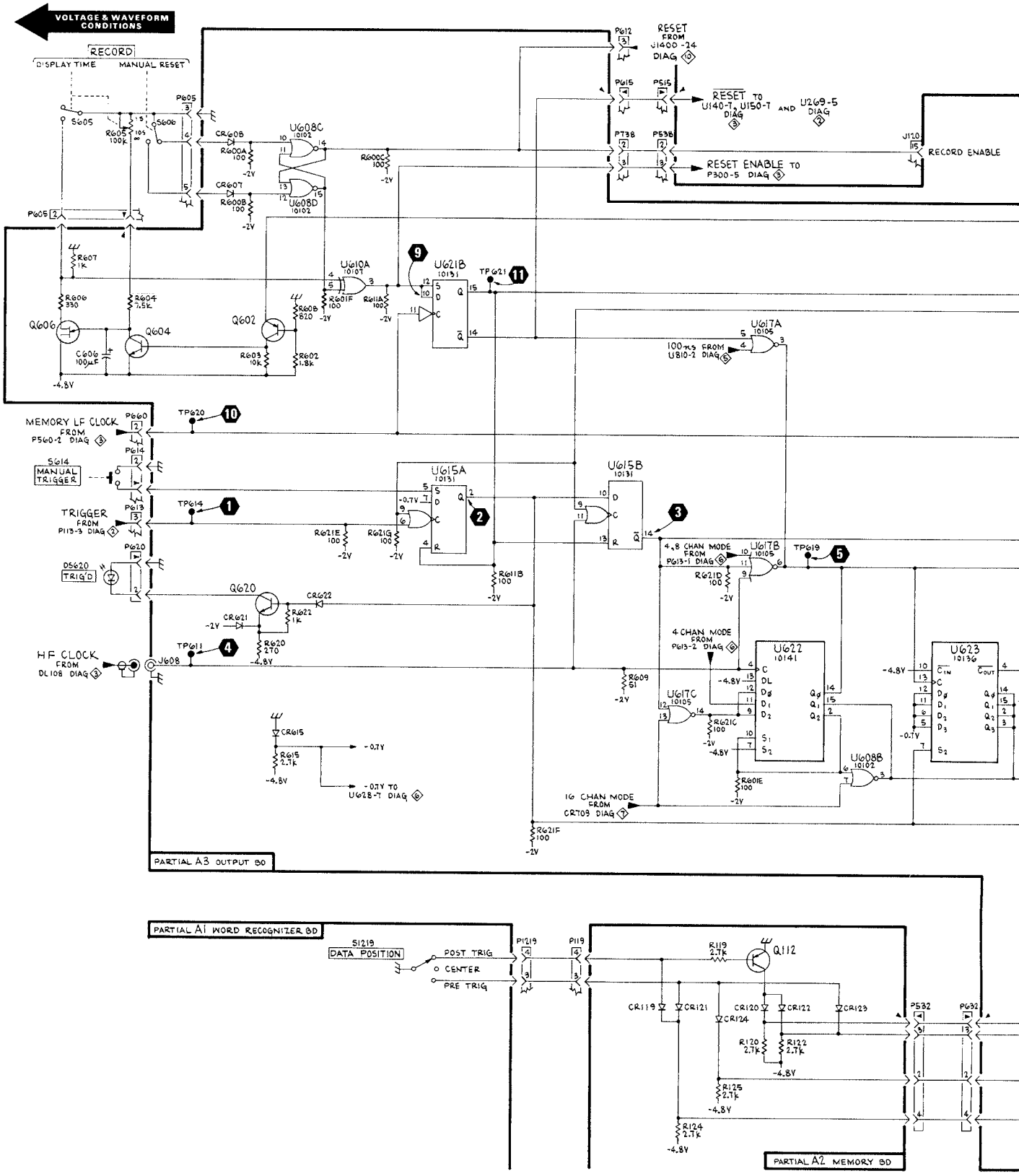

7D01

2206-58
REV.C, JAN1979

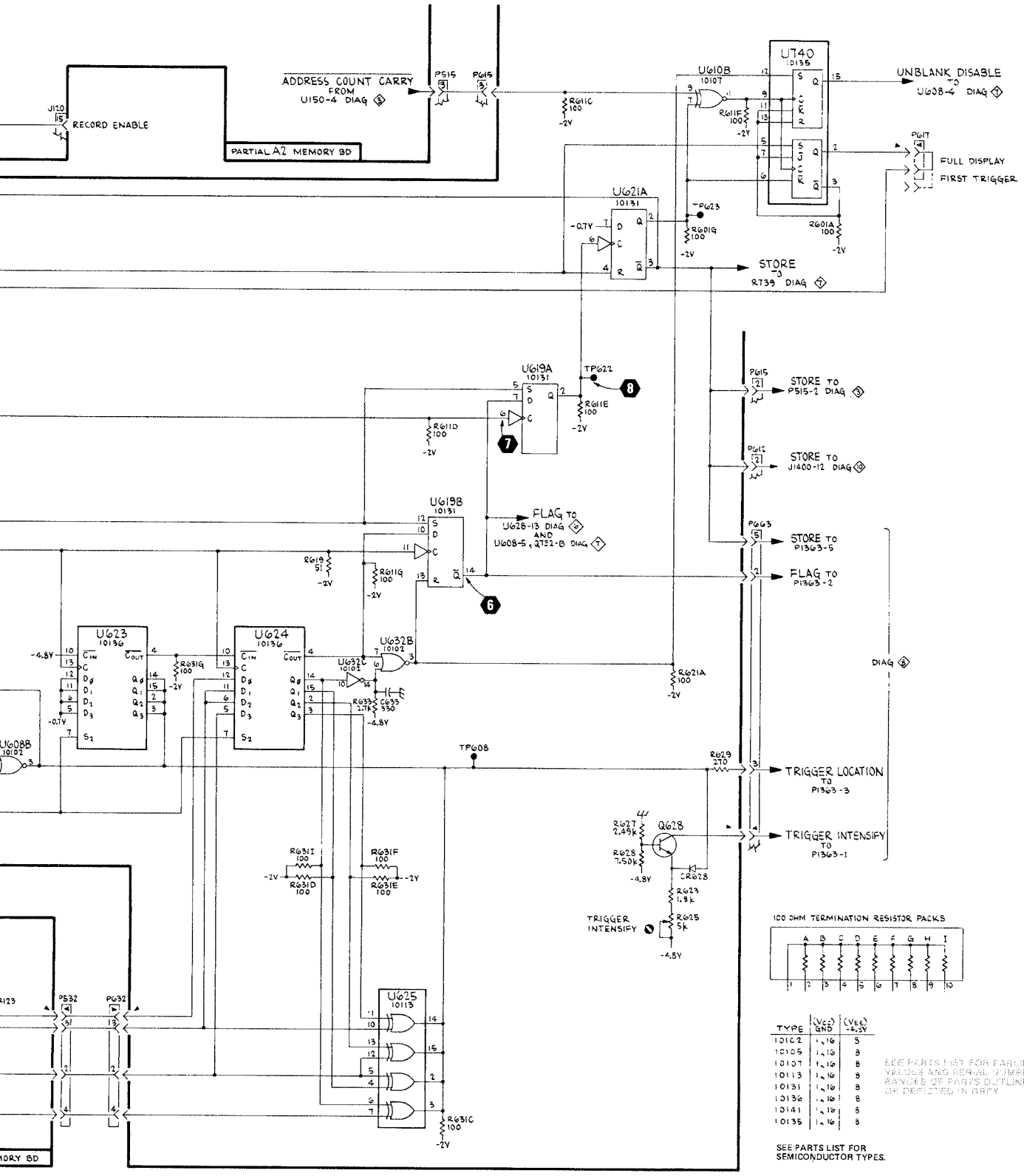
ADDRESS COUNT CARRY FROM U150-4 DIAG 3
RECORD ENABLE
PARTIAL A2 MEMORY BD
U610B 10107
U740 10135
UNBLANK DISABLE TO U608-4 DIAG 1
FULL DISPLAY
FIRST TRIGGER
U621A 10131
STORE TO R739 DIAG 7
U619A 10131
U619B 10131
STORE TO P515-2 DIAG 3
STORE TO J1400-12 DIAG 10
FLAG TO U628-13 DIAG 9 AND U608-5, 2732-B DIAG 7
STORE TO P1363-5
FLAG TO P1363-2
U623 10136
U624 10136
U632B 10102
DIAG 8
TRIGGER LOCATION TO P1363-3
TRIGGER INTENSIFY TO P1363-1
Q628
TRIGGER INTENSIFY
U625 10113
100 OHM TERMINATION RESISTOR PACKS
SEE PARTS LIST FOR SEMICONDUCTOR TYPES.
(SN B020000 & UP)
TRIGGER

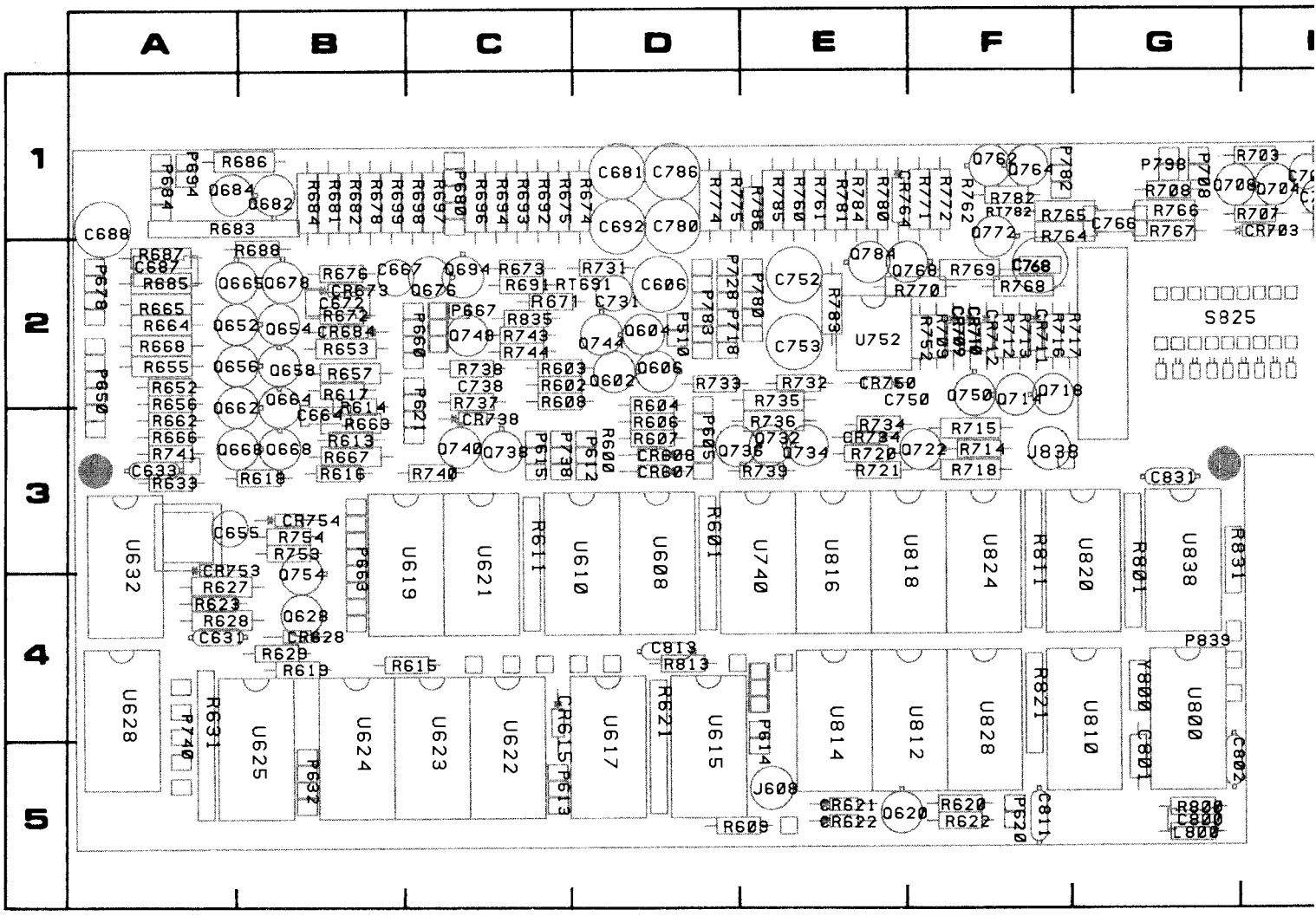

COMPONENT LOCATIONS AS VIEWED WITH BOARD INSTALLED. FOR VIEW OF COMPONENT SIDE OF BOARD, SEE FIGURE 8-5 IN THIS SECTION

Figure 8-15. A3—Output circuit board. Component locations as viewed with board installed.

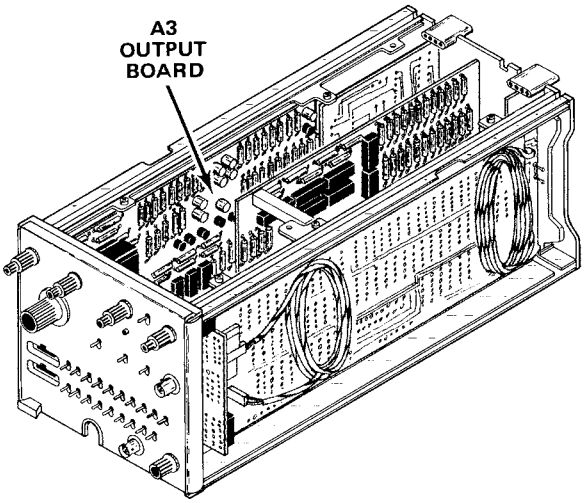

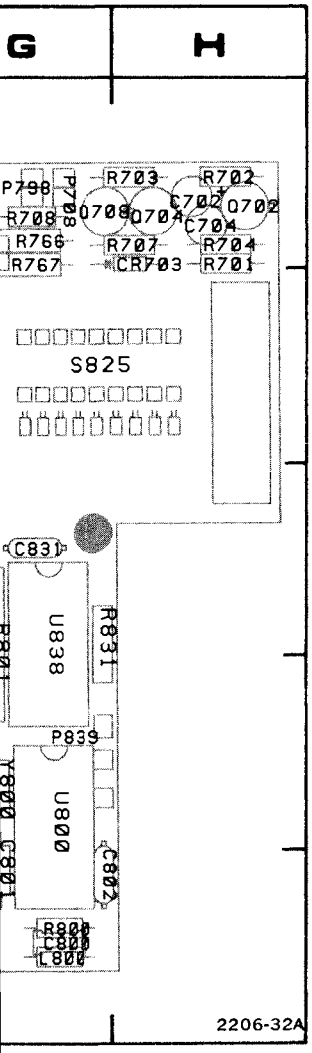

8-5 IN THIS SECTION.

CKT NO	GRID COORD	CKT NO	GRID COORD	CKT NO	GRID COORD	CKT NO	GRID COORD	CKT NO	GRID COORD
C606	2D	P605	3D	Q740	3C	R678	1B	R767	1G
C631	4A	P612	3D	Q744	2D	R681	1B	R768	2F
C633	3A	P613	5C	Q748	2C	R682	1B	R769	2F
C655	3A	P614	4E	Q750	2F	R683	1A	R770	2F
C664	3B	P615	3C	Q754	3B	R684	1B	R771	1F
C667	2B	P620	5F	Q762	1F	R685	2A	R772	1F
C672	2B	P621	2C	Q764	1F	R686	1A	R774	1D
C681	1D	P632	5B	Q768	2F	R687	2A	R775	1D
C687	2A	P650	2A	Q772	1F	R688	2B	R780	1E
C688	1A	P660	2C	Q784	2E	R691	2C	R781	1E
C692	1D	P663	3B			R692	1C	R782	1F
C702	1H	P667	2C	R600	3D	R693	1C	R783	2E
C704	1H	P678	2A	R601	3D	R694	1C	R784	1E
C731	2D	P680	1C	R602	2C	R696	1C	R785	1E
C738	2C	P684	1A	R603	2C	R697	1C	R786	1E
C750	2E	P694	1A	R604	2D	R698	1C	R800	5G
C752	2E	P708	1G	R606	3D	R699	1B	R801	3G
C753	2E	P718	2D	R607	3D	R701	1H	R811	3F
C766	1G	P738	3C	R608	2C	R702	1H	R813	4D
C768	2F	P740	4A	R609	5D	R703	1H	R821	4F
C780	1D	P780	2E	R611	3C	R704	1H	R831	3G
C786	1D	P782	1F	R613	3B	R707	1H	R835	2C
C800	5G	P783	2D	R614	2B	R708	1G		
C801	5G	P798	1G	R615	4B	R709	2F	RT691	2C
C802	5G	P839	4G	R616	3B	R712	2F	RT782	1F
C811	5F			R617	2B	R713	2F		
C813	4D	Q602	2D	R618	3B	R714	3F	S825	2G
C831	3G	Q604	2D	R619	4B	R715	3F		
CR607	3D	Q606	2D	R620	5F	R716	2F	U608	3D
CR608	3D	Q620	5E	R621	4D	R717	2F	U610	3D
CR615	4C	Q628	4B	R622	5F	R718	3F	U615	5D
CR621	5E	Q652	2A	R623	4A	R720	3E	U617	5D
CR622	5E	Q654	2B	R627	4A	R721	3E	U619	3C
CR628	4B	Q656	2A	R628	4A	R731	2D	U621	3C
CR673	2B	Q658	2B	R629	4B	R732	2E	U622	5C
CR684	2B	Q662	2A	R631	4A	R733	2D	U623	5C
CR703	1H	Q664	2B	R633	3A	R734	3E	U624	5B
CR709	2F	Q665	2A	R652	2A	R735	2E	U625	5B
CR710	2F	Q666	3A	R653	2B	R736	3E	U628	4A
CR711	2F	Q668	3B	R655	2A	R737	2C	U632	3A
CR712	2F	Q676	2C	R656	2A	R738	2C	U740	3E
CR717	2F	Q678	2B	R657	2B	R739	3E	U752	2E
CR734	3E	Q682	1B	R662	3A	R740	3C	U800	4G
CR738	3C	Q684	1A	R663	3B	R741	3A	U810	4G
CR750	2E	Q694	2C	R664	2A	R743	2C	U812	4F
CR753	3A	Q702	1H	R665	2A	R744	2C	U814	4E
CR754	3B	Q704	1H	R666	3A	R752	2F	U816	3E
CR764	1E	Q708	1G	R667	3B	R753	3B	U818	3F
		Q714	2F	R668	2A	R754	3B	U820	3G
J608	5E	Q718	2F	R671	2C	R760	1E	U824	3F
J838	3F	Q722	3F	R672	2B	R761	1E	U828	4F
		Q732	3E	R673	2C	R762	1F	U838	3G
L800	5G	Q734	3E	R674	1D	R764	1F		
		Q736	3D	R675	1C	R765	1F	Y800	4G
P510	2D	Q738	3C	R676	2B	R766	1G		

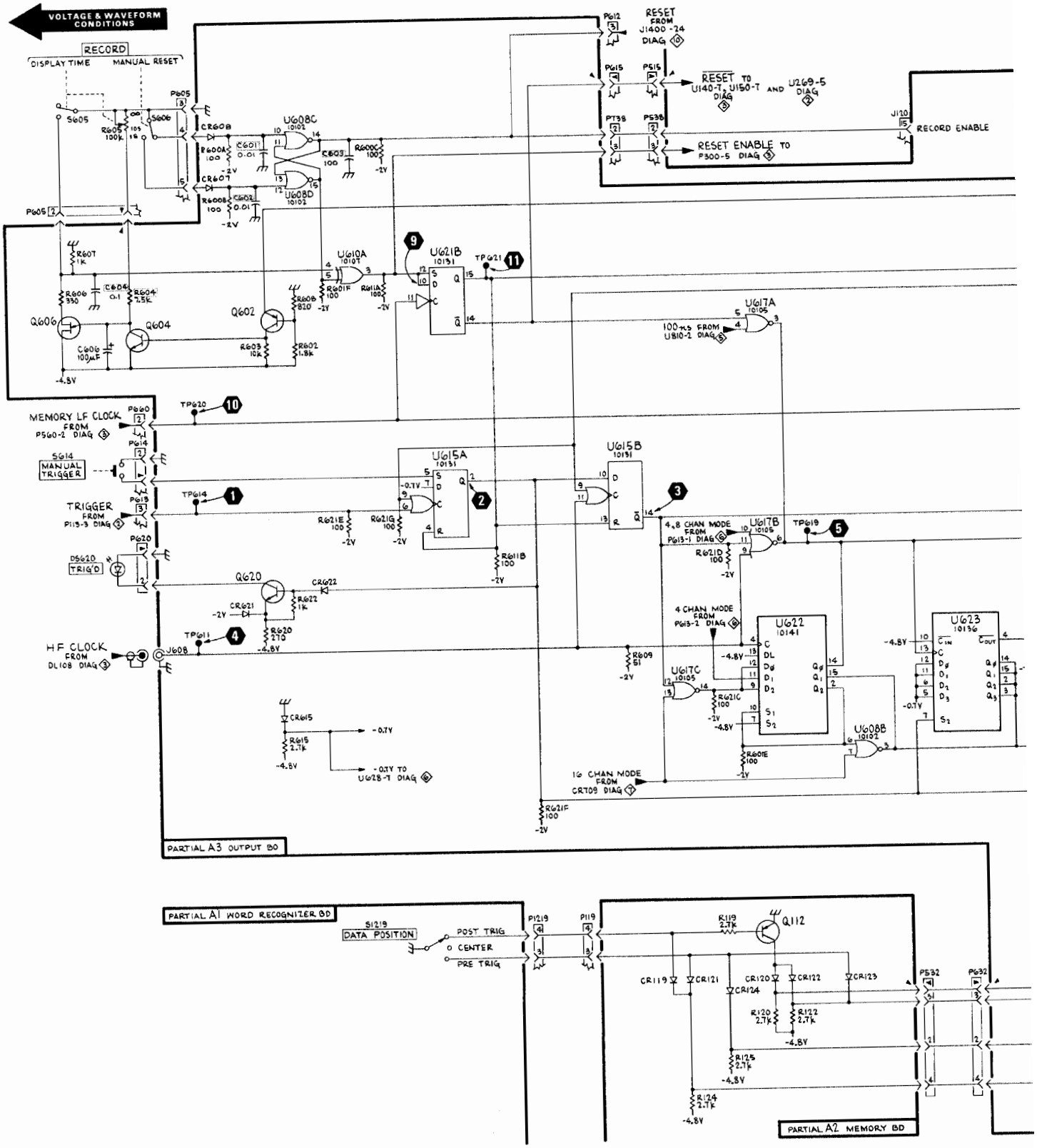

7D01

2206-58
REV D FEB 1980

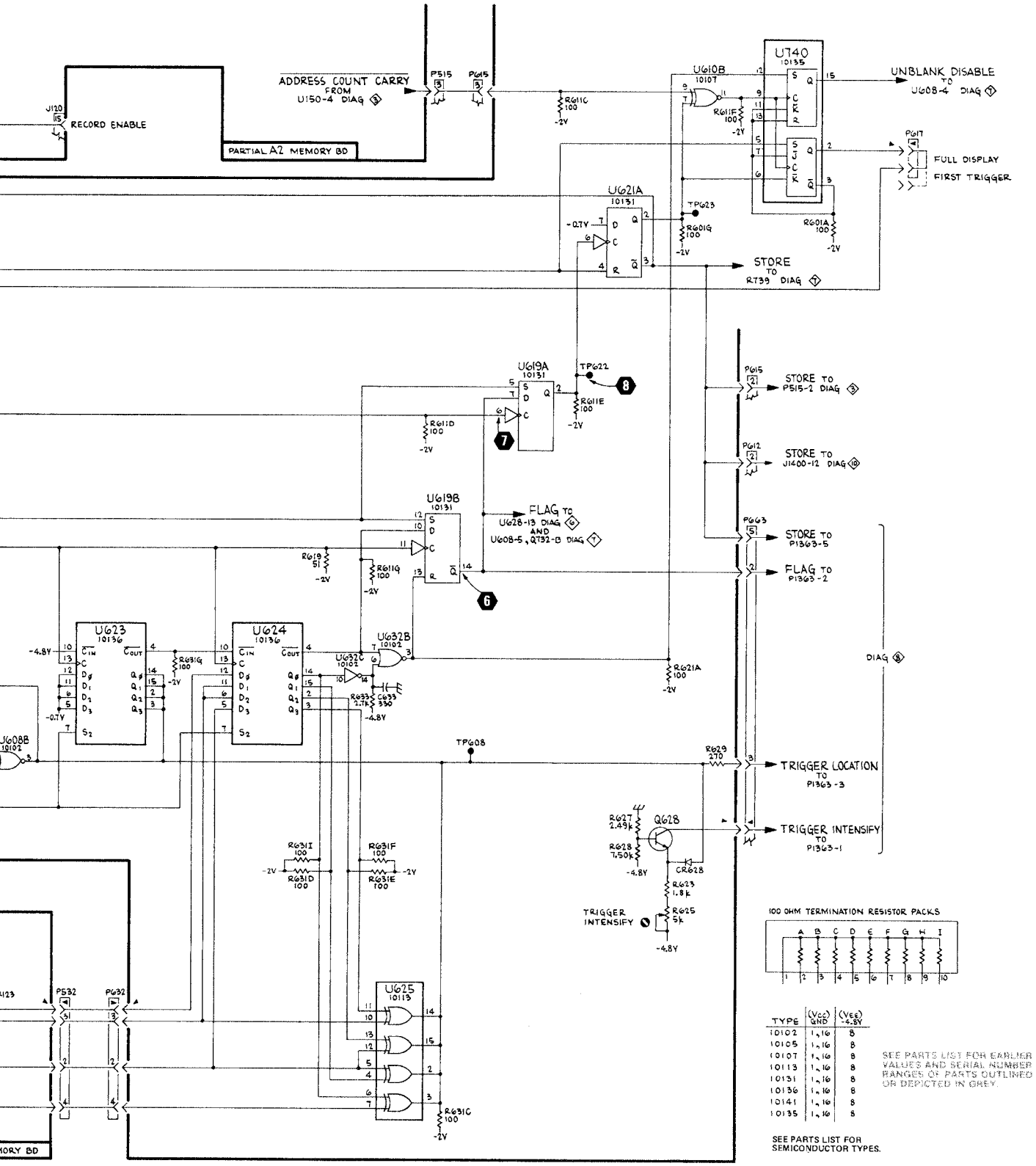

TYPE	(Vcc) GND	(Vee) -4.8V
10102	1,16	8
10105	1,16	8
10107	1,16	8
10113	1,16	8
10131	1,16	8
10136	1,16	8
10141	1,16	8
10135	1,16	8

SEE PARTS LIST FOR EARLIER VALUES AND SERIAL NUMBER RANGES OF PARTS OUTLINED OR DEPICTED IN GREY.

SEE PARTS LIST FOR SEMICONDUCTOR TYPES.

(SN B020000 & UP)

TRIGGER 4

3
B 1980

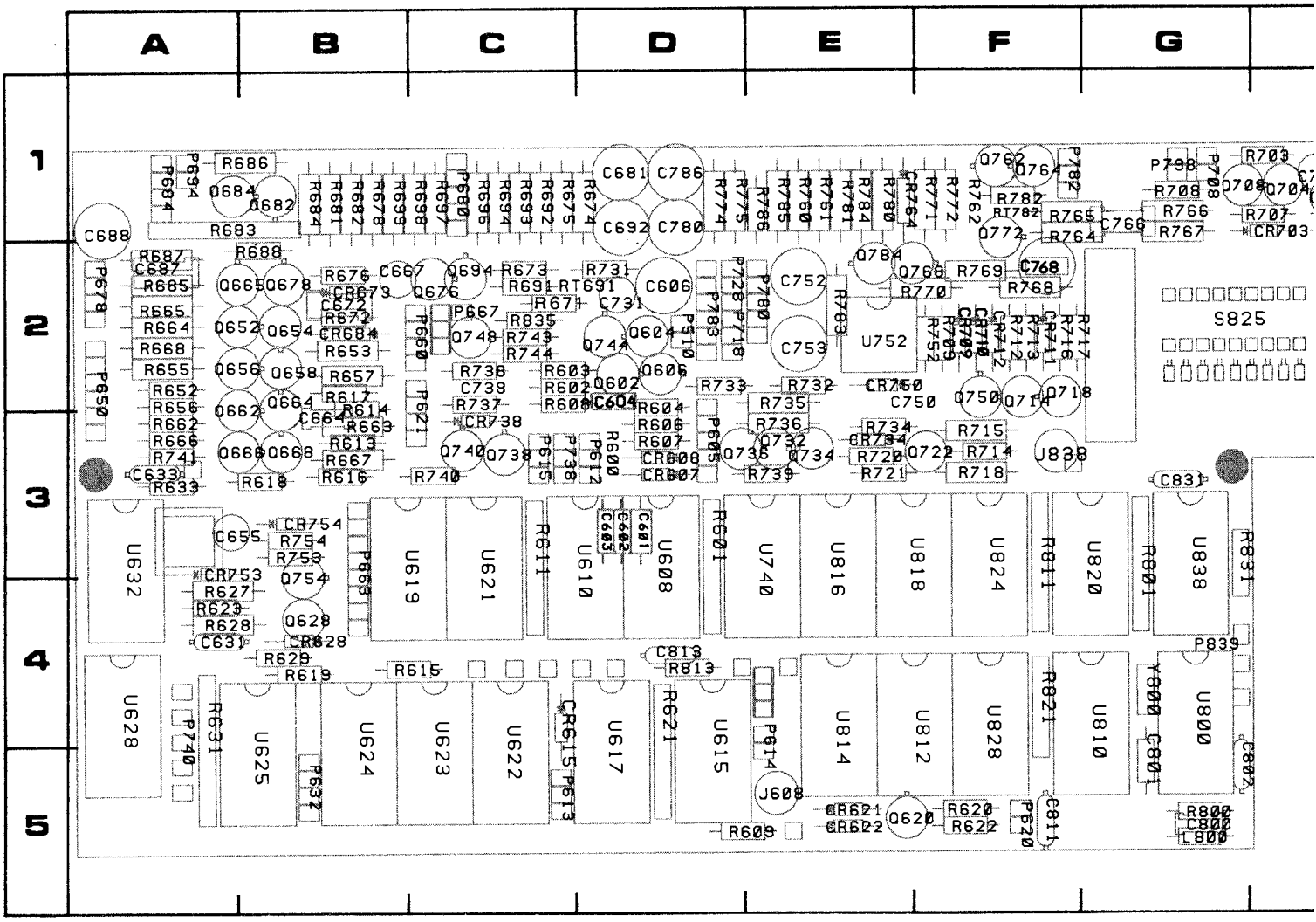

COMPONENT LOCATIONS AS VIEWED WITH BOARD INSTALLED. FOR VIEW OF COMPONENT SIDE OF BOARD SEE FIGURE 8-5 IN THIS SECTIO

Figure 8-12. A3—Output circuit board. Component locations as viewed with board installed.

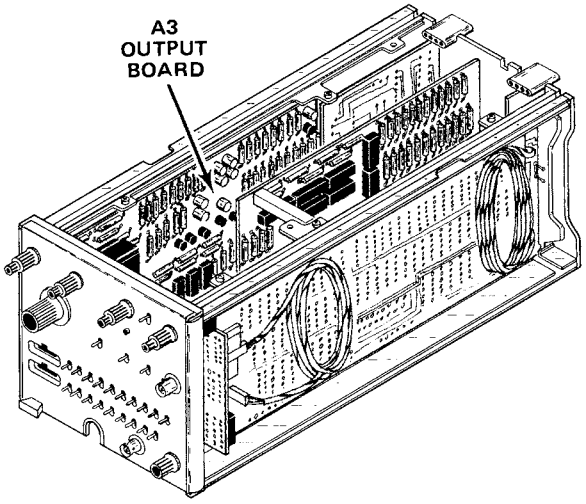

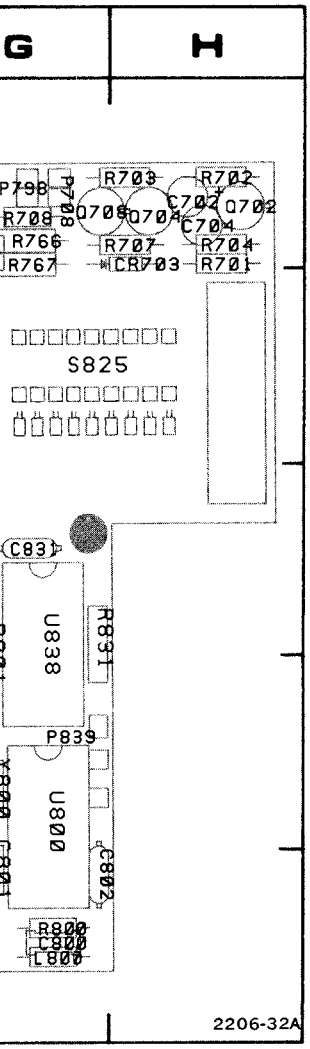

3-5 IN THIS SECTION.

CKT NO	GRID COORD	CKT NO	GRID COORD	CKT NO	GRID COORD	CKT NO	GRID COORD	CKT NO	GRID COORD
C601	3D	L800	5G	Q736	3D	R676	2B	R767	1G
C602	3D			Q738	3C	R678	1B	R768	2F
C603	3D	P510	2D	Q740	3C	R681	1B	R769	2F
C604	2D	P605	3D	Q744	2D	R682	1B	R770	2F
C606	2D	P612	3D	Q748	2C	R683	1A	R771	1F
C631	4A	P613	5C	Q750	2F	R684	1B	R772	1F
C633	3A	P614	4E	Q754	3B	R685	2A	R774	1D
C655	3A	P615	3C	Q762	1F	R686	1A	R775	1D
C664	3B	P620	5F	Q764	1F	R687	2A	R780	1E
C667	2B	P621	2C	Q768	2F	R688	2B	R781	1E
C672	2B	P632	5B	Q772	1F	R691	2C	R782	1F
C681	1D	P650	2A	Q784	2E	R692	1C	R783	2E
C687	2A	P660	2C			R693	1C	R784	1E
C688	1A	P663	3B	R600	3D	R694	1C	R785	1E
C692	1D	P667	2C	R601	3D	R696	1C	R786	1E
C702	1H	P678	2A	R602	2C	R697	1C	R800	5G
C704	1H	P680	1C	R603	2C	R698	1C	R801	3G
C731	2D	P684	1A	R604	2D	R699	1B	R811	3F
C738	2C	P694	1A	R606	3D	R701	1H	R813	4D
C750	2E	P708	1G	R607	3D	R702	1H	R821	4F
C752	2E	P718	2D	R608	2C	R703	1H	R831	3G
C753	2E	P738	3C	R609	5D	R704	1H	R835	2C
C766	1G	P740	4A	R611	3C	R707	1H		
C768	2F	P780	2E	R613	3B	R708	1G	RT691	2C
C780	1D	P782	1F	R614	2B	R709	2F	RT782	1F
C786	1D	P783	2D	R615	4B	R712	2F		
C800	5G	P798	1G	R616	3B	R713	2F	S825	2G
C801	5G	P839	4G	R617	2B	R714	3F		
C802	5G			R618	3B	R715	3F	U608	3D
C811	5F	Q602	2D	R619	4B	R716	2F	U610	3D
C813	4D	Q604	2D	R620	5F	R717	2F	U615	5D
C831	3G	Q606	2D	R621	4D	R718	3F	U617	5D
		Q620	5E	R622	5F	R720	3E	U619	3C
CR607	3D	Q628	4B	R623	4A	R721	3E	U621	3C
CR608	3D	Q652	2A	R627	4A	R731	2D	U622	5C
CR615	4C	Q654	2B	R628	4A	R732	2E	U623	5C
CR621	5E	Q656	2A	R629	4B	R733	2D	U624	5B
CR622	5E	Q658	2B	R631	4A	R734	3E	U625	5B
CR628	4B	Q662	2A	R633	3A	R735	2E	U628	4A
CR673	2B	Q664	2B	R652	2A	R736	3E	U632	3A
CR684	2B	Q665	2A	R653	2B	R737	2C	U740	3E
CR703	1H	Q666	3A	R655	2A	R738	2C	U752	2E
CR709	2F	Q668	3B	R656	2A	R739	3E	U800	4G
CR710	2F	Q676	2C	R657	2B	R740	3C	U810	4G
CR711	2F	Q678	2B	R662	3A	R741	3A	U812	4F
CR712	2F	Q682	1B	R663	3B	R743	2C	U814	4E
CR717	2F	Q684	1A	R664	2A	R744	2C	U816	3E
CR734	3E	Q694	2C	R665	2A	R752	2F	U818	3F
CR738	3C	Q702	1H	R666	3A	R753	3B	U820	3G
CR750	2E	Q704	1H	R667	3B	R754	3B	U824	3F
CR753	3A	Q708	1G	R668	2A	R760	1E	U828	4F
CR754	3B	Q714	2F	R671	2C	R761	1E	U838	3G
CR764	1E	Q718	2F	R672	2B	R762	1F		
		Q722	3F	R673	2C	R764	1F	Y800	4G
J608	5E	Q732	3E	R674	1D	R765	1F		
J838	3F	Q734	3E	R675	1C	R766	1G		

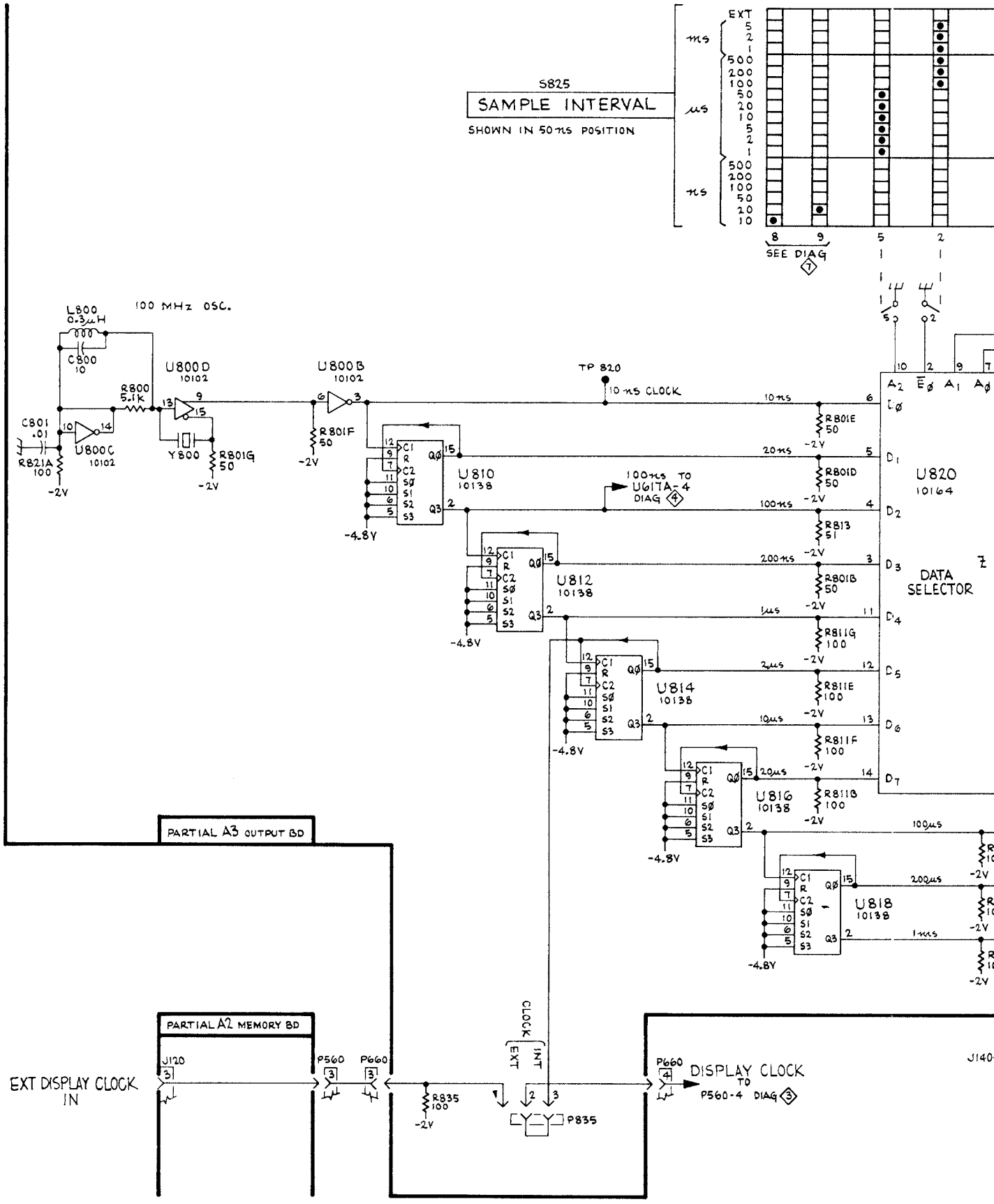
S825
SAMPLE INTERVAL
SHOWN IN 50 ns POSITION
EXT
ns
μs
SEE DIAG 7
L800 0.3μH
C800 10
100 MHz OSC.
U800D 10102
U800B 10102
U800C 10102
R800 5.1k
C801 .01
R821A 100
Y800
R801G 50
R801F 50
TP 820
10 ns CLOCK
U810 10138
U812 10138
U814 10138
U816 10138
U818 10138
100 ns TO U617A-4 DIAG 4
R801E 50
R801D 50
R813 51
R801B 50
R811G 100
R811E 100
R811F 100
R811B 100
U820 10164
DATA SELECTOR
PARTIAL A3 OUTPUT BD
PARTIAL A2 MEMORY BD
EXT DISPLAY CLOCK IN
J120
P560
P660
R835 100
CLOCK
EXT
INT
P835
DISPLAY CLOCK TO P560-4 DIAG 3
J140

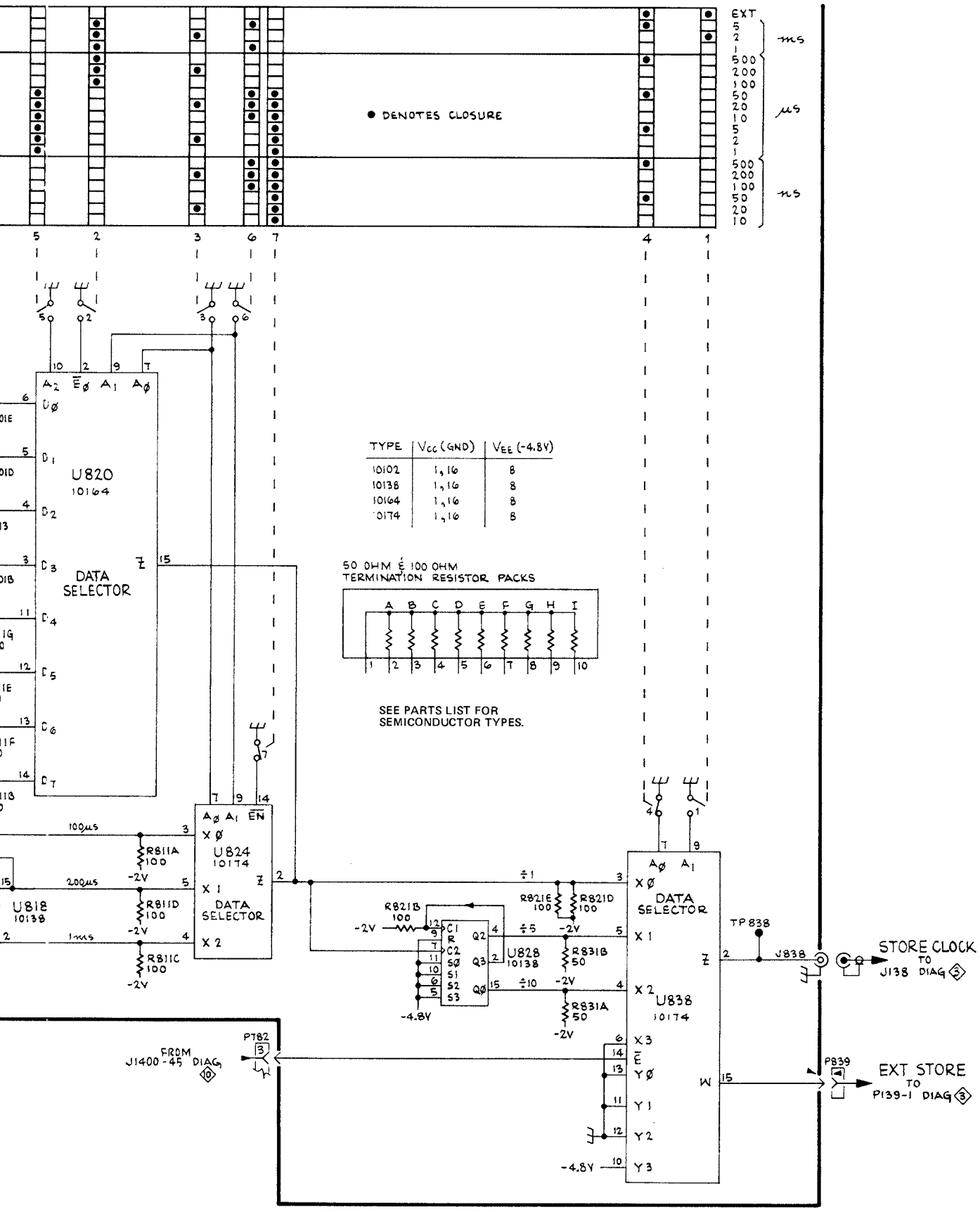

TYPE	V_{CC} (GND)	V_{EE} (-4.8V)
10102	1,16	8
10138	1,16	8
10164	1,16	8
10174	1,16	8

50 OHM & 100 OHM TERMINATION RESISTOR PACKS

SEE PARTS LIST FOR SEMICONDUCTOR TYPES.

(SN B020000 & UP)

TIME BASE

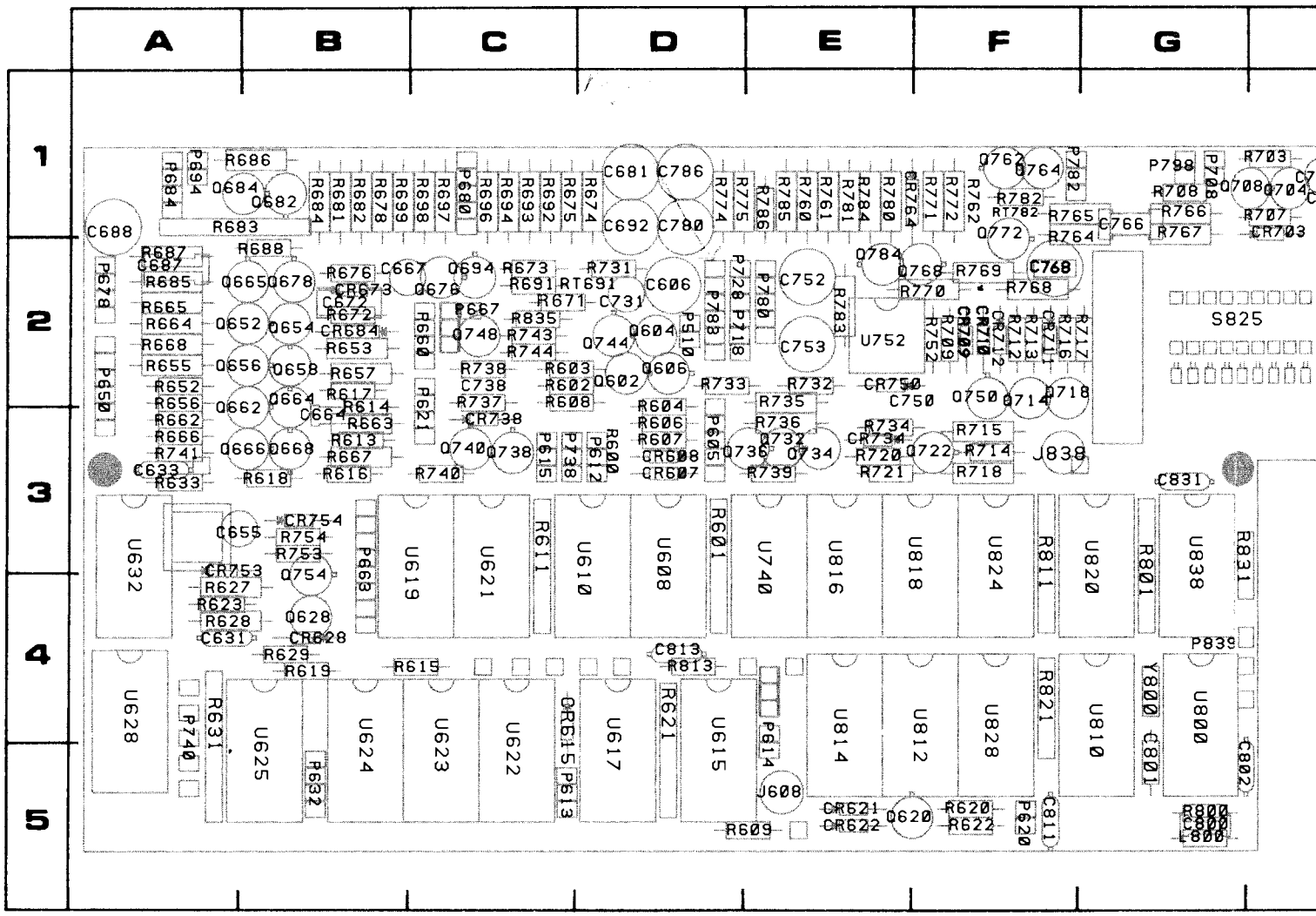

COMPONENT LOCATIONS AS VIEWED WITH BOARD INSTALLED. FOR VIEW OF COMPONENT SIDE OF BOARD, SEE FIGURE 8-5 IN THIS SECTION

Figure 8-13. A3—Output circuit board. Component locations as viewed with board installed.

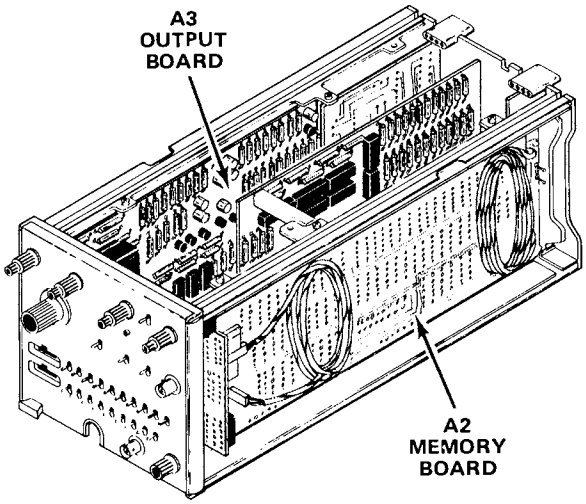

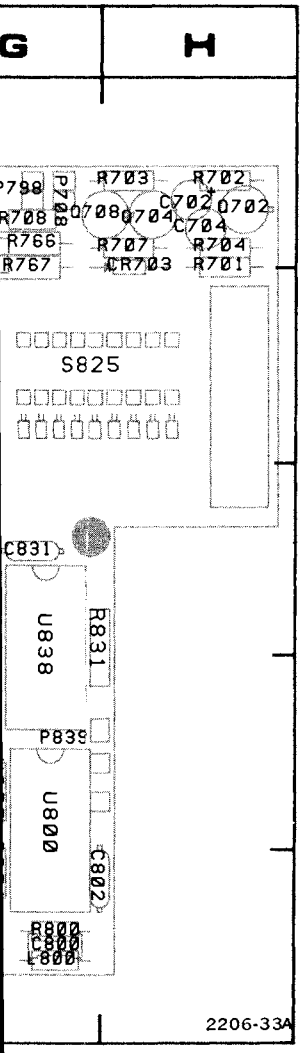

5 IN THIS SECTION.

CKT NO	GRID COORD	CKT NO	GRID COORD	CKT NO	GRID COORD	CKT NO	GRID COORD	CKT NO	GRID COORD
C606	2D	P605	3D	Q740	3C	R678	1B	R767	1G
C631	4A	P612	3D	Q744	2D	R681	1B	R768	2F
C633	3A	P613	5C	Q748	2C	R682	1B	R769	2F
C655	3A	P614	4E	Q750	2F	R683	1A	R770	2F
C664	3B	P615	3C	Q754	3B	R684	1B	R771	1F
C667	2B	P620	5F	Q762	1F	R685	2A	R772	1F
C672	2B	P621	2C	Q764	1F	R686	1A	R774	1D
C681	1D	P632	5B	Q768	2F	R687	2A	R775	1D
C687	2A	P650	2A	Q772	1F	R688	2B	R780	1E
C688	1A	P660	2C	Q784	2E	R691	2C	R781	1E
C692	1D	P663	3B			R692	1C	R782	1F
C702	1H	P667	2C	R600	3D	R693	1C	R783	2E
C704	1H	P678	2A	R601	3D	R694	1C	R784	1E
C731	2D	P680	1C	R602	2C	R696	1C	R785	1E
C738	2C	P684	1A	R603	2C	R697	1C	R786	1E
C750	2E	P694	1A	R604	2D	R698	1C	R800	5G
C752	2E	P708	1G	R606	3D	R699	1B	R801	3G
C753	2E	P718	2D	R607	3D	R701	1H	R811	3F
C766	1G	P738	3C	R608	2C	R702	1H	R813	4D
C768	2F	P740	4A	R609	5D	R703	1H	R821	4F
C780	1D	P780	2E	R611	3C	R704	1H	R831	3G
C786	1D	P782	1F	R613	3B	R707	1H	R835	2C
C800	5G	P783	2D	R614	2B	R708	1G		
C801	5G	P798	1G	R615	4B	R709	2F	RT691	2C
C802	5G	P839	4G	R616	3B	R712	2F	RT782	1F
C811	5F			R617	2B	R713	2F		
C813	4D	Q602	2D	R618	3B	R714	3F	S825	2G
C831	3G	Q604	2D	R619	4B	R715	3F		
CR607	3D	Q606	2D	R620	5F	R716	2F	U608	3D
CR608	3D	Q620	5E	R621	4D	R717	2F	U610	3D
CR615	4C	Q628	4B	R622	5F	R718	3F	U615	5D
CR621	5E	Q652	2A	R623	4A	R720	3E	U617	5D
CR622	5E	Q654	2B	R627	4A	R721	3E	U619	3C
CR628	4B	Q656	2A	R628	4A	R731	2D	U621	3C
CR673	2B	Q658	2B	R629	4B	R732	2E	U622	5C
CR684	2B	Q662	2A	R631	4A	R733	2D	U623	5C
CR703	1H	Q664	2B	R633	3A	R734	3E	U624	5B
CR709	2F	Q665	2A	R652	2A	R735	2E	U625	5B
CR710	2F	Q666	3A	R653	2B	R736	3E	U628	4A
CR711	2F	Q668	3B	R655	2A	R737	2C	U632	3A
CR712	2F	Q676	2C	R656	2A	R738	2C	U740	3E
CR717	2F	Q678	2B	R657	2B	R739	3E	U752	2E
CR734	3E	Q682	1B	R662	3A	R740	3C	U800	4G
CR738	3C	Q684	1A	R663	3B	R741	3A	U810	4G
CR750	2E	Q694	2C	R664	2A	R743	2C	U812	4F
CR753	3A	Q702	1H	R665	2A	R744	2C	U814	4E
CR754	3B	Q704	1H	R666	3A	R752	2F	U816	3E
CR764	1E	Q708	1G	R667	3B	R753	3B	U818	3F
		Q714	2F	R668	2A	R754	3B	U820	3G
J608	5E	Q718	2F	R671	2C	R760	1E	U824	3F
J838	3F	Q722	3F	R672	2B	R761	1E	U828	4F
		Q732	3E	R673	2C	R762	1F	U838	3G
L800	5G	Q734	3E	R674	1D	R764	1F		
		Q736	3D	R675	1C	R765	1F	Y800	4G
P510	2D	Q738	3C	R676	2B	R766	1G		

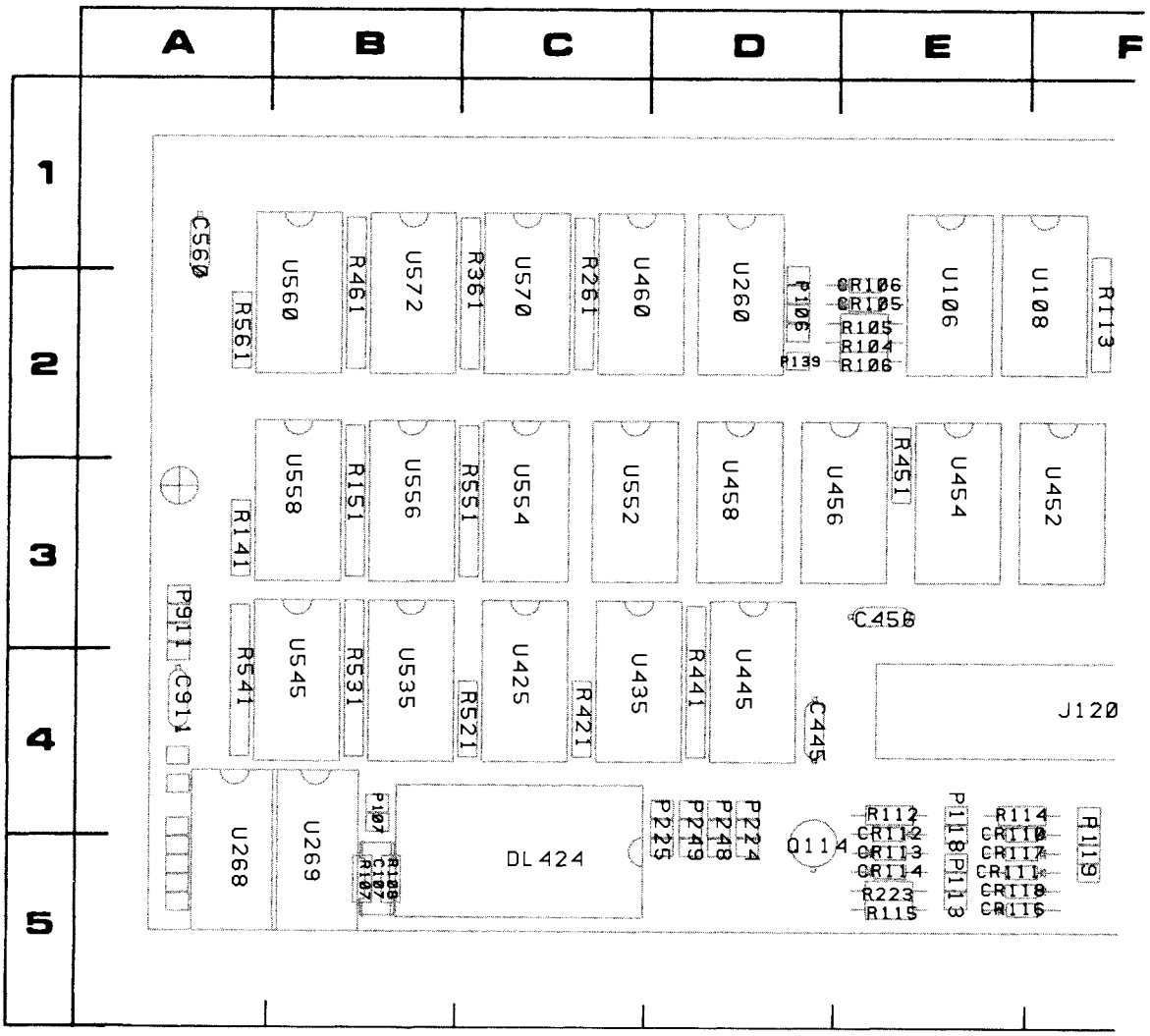

COMPONENT LOCATIONS AS VIEWED WITH BOARD INSTALLED. FOR VIEW OF COMPONENT SIDE OF BOARD, SEE FIGURE 8-3 IN THIS SECTION.

Figure 8-14. Partial A2—Memory circuit board. Component locations as viewed with board installed.

CKT NO	GRID COORD	CKT NO	GRID COORD	CKT NO	GRID COORD	CKT NO	GRID COORD	CKT NO	GRID COORD	CKT NO	GRID COORD	CKT NO	GRID COORD
C107	5B	CR118	5E	P139	2D	R108	5B	R361	2C	U235	4I	U460	2C
C110	2G	CR119	5G	P212	5J	R111	2G	R421	4C	U245	4J	U535	4B
C130	1G	CR120	4F	P213	5J	R112	4E	R441	4D	U252	3J	U545	4B
C150	1I	CR121	5G	P224	4D	R113	2F	R451	3E	U254	3J	U552	3C
C252	3K	CR122	5F	P225	4D	R114	4E	R461	2B	U256	3I	U554	3C
C356	3F	CR123	4G	P236	5J	R115	5E	R521	4C	U258	3H	U556	3B
C445	4D	CR124	5F	P237	5J	R119	5G	R531	4B	U260	2D	U558	3B
C456	3E			P248	4D	R120	4F	R541	4A	U268	5A	U560	2B
C560	1A	DL224	5I	P249	4D	R121	5G	R551	3C	U269	5B	U570	2C
C911	4A	DL424	5C	P350	4K	R122	4G	R561	2A	U335	4H	U572	2B
C935	4K			P532	5G	R125	5F			U345	4H		
		J108	1G	P538	4H	R141	3A	U106	2E	U352	3H		
CR105	2E	J120	4F	P550	1K	R150	2J	U108	2F	U354	3G		
CR106	2E	J138	2G	P911	3A	R151	3B	U110	2F	U356	3G		
CR110	4E					R221	4I	U120	2H	U358	3F		
CR111	5E	P106	2D	Q112	5G	R223	5E	U130	2G	U425	4C		
CR112	4E	P107	4B	Q114	5D	R241	4J	U132	2H	U435	4C		
CR113	5E	P112	3K			R251	3J	U132	2H	U445	4D		
CR114	5E	P113	5E	R104	2E	R261	2C	U136	2I	U452	3F		
CR115	5F	P114	4H	R105	2E	R321	4H	U140	2J	U454	3E		
CR116	5E	P118	4E	R106	2E	R341	4H	U150	2I	U456	3D		
CR117	5E	P119	5F	R107	5B	R351	3H	U225	4I	U458	3D		

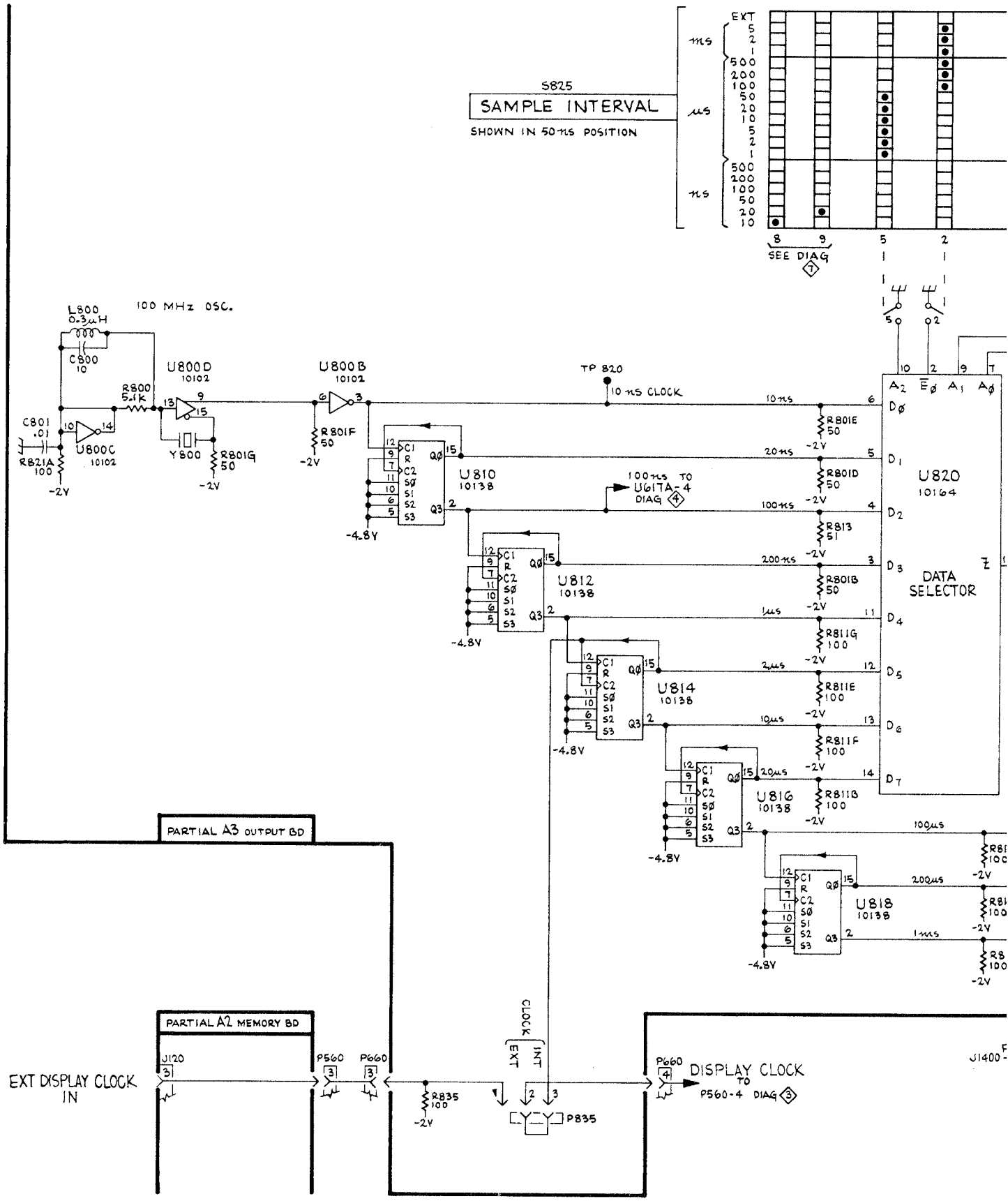
S825
SAMPLE INTERVAL
SHOWN IN 50 ns POSITION
EXT
ms
μs
ns
SEE DIAG 7
100 MHz OSC.
L800 0.3μH
C800 10
U800D 10102
U800B 10102
U800C 10102
R800 5.1K
C801 .01
R821A 100
Y800
R801G 50
R801F 50
TP 820
10 ns CLOCK
U810 10138
U812 10138
U814 10138
U816 10138
U818 10138
100 ns TO U61TA-4 DIAG 4
U820 10164
DATA SELECTOR
R801E 50
R801D 50
R813 51
R801B 50
R811G 100
R811E 100
R811F 100
R811B 100
PARTIAL A3 OUTPUT BD
PARTIAL A2 MEMORY BD
EXT DISPLAY CLOCK IN
J120
P560
P660
R835 100
CLOCK
EXT
INT
P835
DISPLAY CLOCK TO P560-4 DIAG 3
J1400

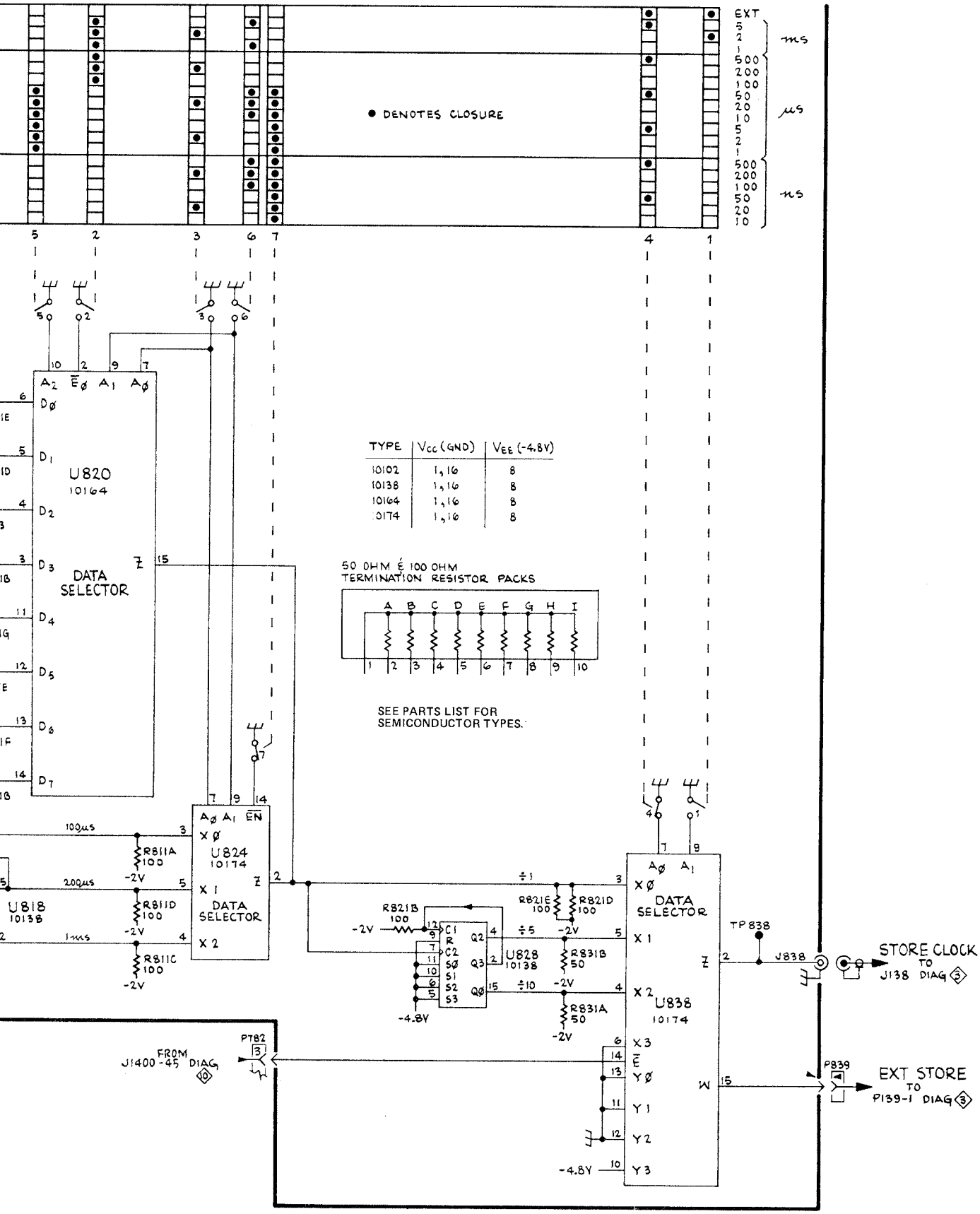

TYPE	V_{CC} (GND)	V_{EE} (-4.8V)
10102	1, 16	8
10138	1, 16	8
10164	1, 16	8
10174	1, 16	8

(SN B020000 & UP)
TIME BASE 5

TIME BASE 5

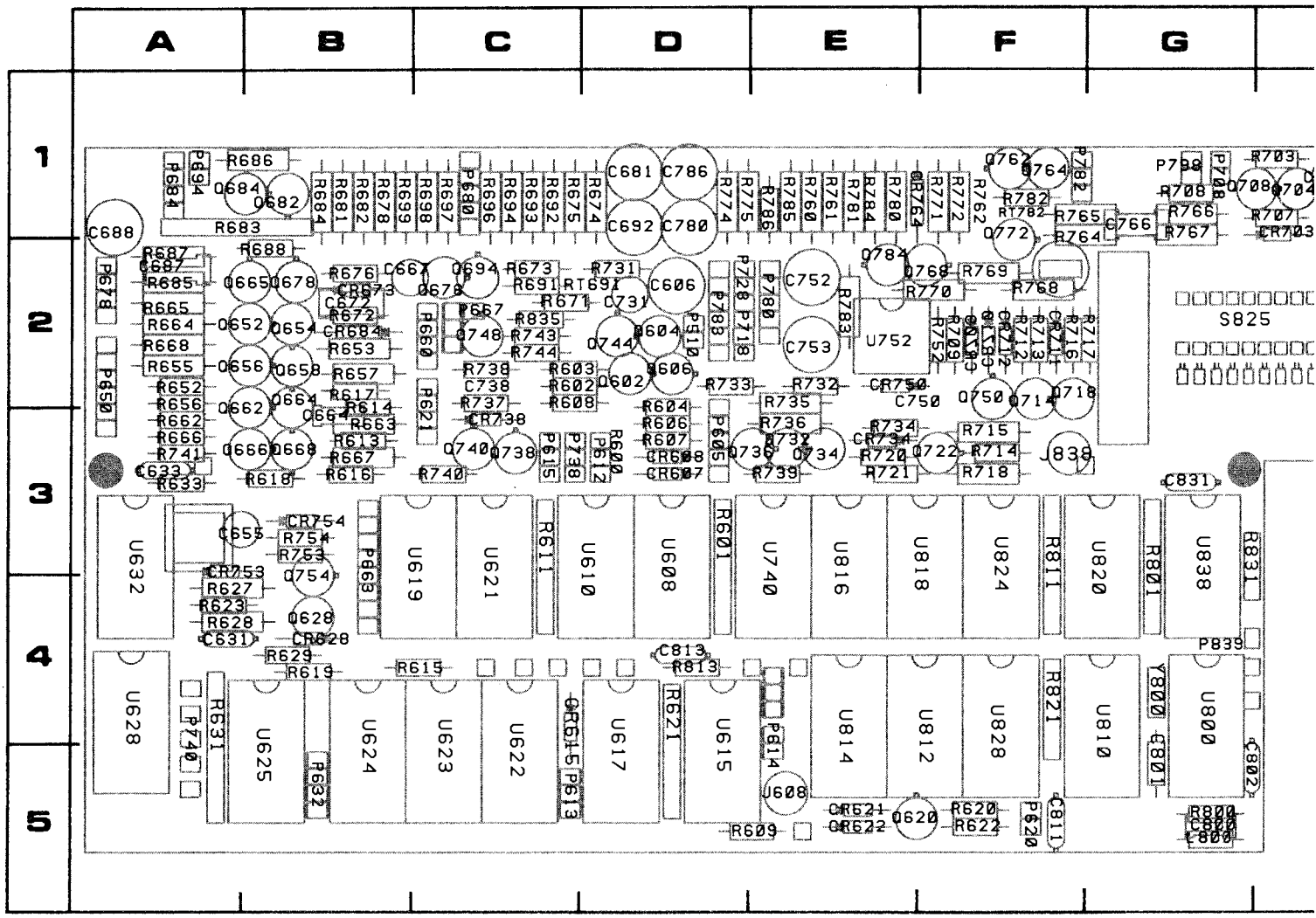

COMPONENT LOCATIONS AS VIEWED WITH BOARD INSTALLED. FOR VIEW OF COMPONENT SIDE OF BOARD, SEE FIGURE 8-5 IN THIS SECTIO

Figure 8-13. A3—Output circuit board. Component locations as viewed with board installed.

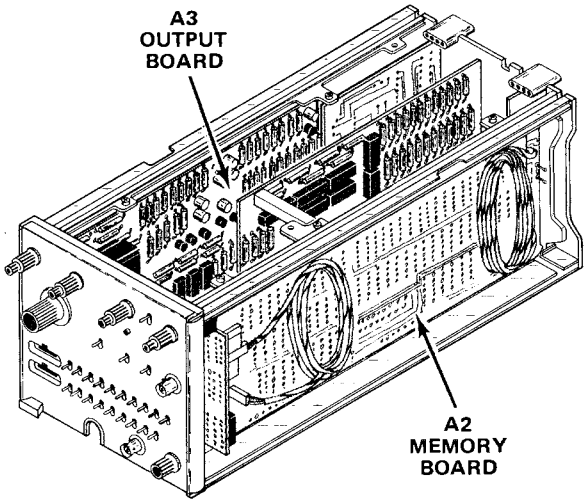

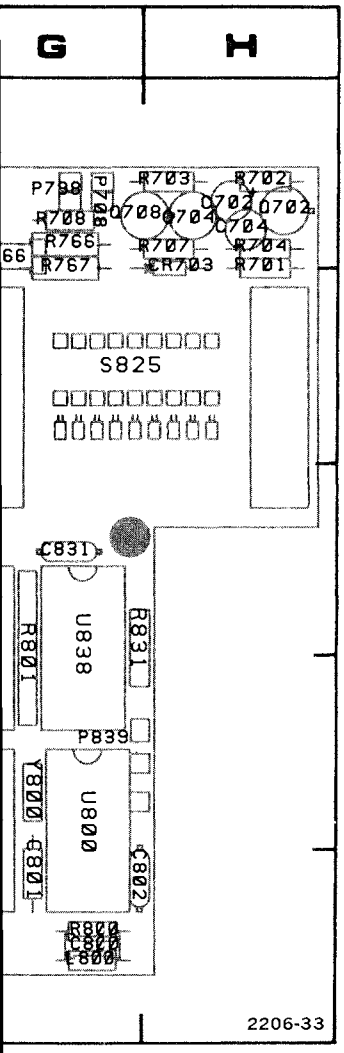

E 8-5 IN THIS SECTION.

CKT NO	GRID COORD	CKT NO	GRID COORD	CKT NO	GRID COORD	CKT NO	GRID COORD	CKT NO	GRID COORD
C606	2D	P605	3D	Q740	3C	R678	1B	R767	1G
C631	4A	P612	3D	Q744	2D	R681	1B	R768	2F
C633	3A	P613	5C	Q748	2C	R682	1B	R769	2F
C655	3A	P614	4E	Q750	2F	R683	1A	R770	2F
C664	3B	P615	3C	Q754	3B	R684	1B	R771	1F
C667	2B	P620	5F	Q762	1F	R685	2A	R772	1F
C672	2B	P621	2C	Q764	1F	R686	1A	R774	1D
C681	1D	P632	5B	Q768	2F	R687	2A	R775	1D
C687	2A	P650	2A	Q772	1F	R688	2B	R780	1E
C688	1A	P660	2C	Q784	2E	R691	2C	R781	1E
C692	1D	P663	3B			R692	1C	R782	1F
C702	1H	P667	2C	R600	3D	R693	1C	R783	2E
C704	1H	P678	2A	R601	3D	R694	1C	R784	1E
C731	2D	P680	1C	R602	2C	R696	1C	R785	1E
C738	2C	P684	1A	R603	2C	R697	1C	R786	1E
C750	2E	P694	1A	R604	2D	R698	1C	R800	5G
C752	2E	P708	1G	R606	3D	R699	1B	R801	3G
C753	2E	P718	2D	R607	3D	R701	1H	R811	3F
C766	1G	P738	3C	R608	2C	R702	1H	R813	4D
C780	1D	P740	4A	R609	5D	R703	1H	R821	4F
C786	1D	P780	2E	R611	3C	R704	1H	R831	3G
C800	5G	P782	1F	R613	3B	R707	1H	R835	2C
C801	5G	P783	2D	R614	2B	R708	1G		
C802	5G	P798	1G	R615	4B	R709	2F	RT691	2C
C811	5F	P839	4G	R616	3B	R712	2F	RT782	1F
C813	4D			R617	2B	R713	2F		
C831	3G	Q602	2D	R618	3B	R714	3F	S825	2G
		Q604	2D	R619	4B	R715	3F		
CR607	3D	Q606	2D	R620	5F	R716	2F	U608	3D
CR608	3D	Q620	5E	R621	4D	R717	2F	U610	3D
CR615	4C	Q628	4B	R622	5F	R718	3F	U615	5D
CR621	5E	Q652	2A	R623	4A	R720	3E	U617	5D
CR622	5E	Q654	2B	R627	4A	R721	3E	U619	3C
CR628	4B	Q656	2A	R628	4A	R731	2D	U621	3C
CR673	2B	Q658	2B	R629	4B	R732	2E	U622	5C
CR684	2B	Q662	2A	R631	4A	R733	2D	U623	5C
CR703	1H	Q664	2B	R633	3A	R734	3E	U624	5B
CR709	2F	Q665	2A	R652	2A	R735	2E	U625	5B
CR710	2F	Q666	3A	R653	2B	R736	3E	U628	4A
CR711	2F	Q668	3B	R655	2A	R737	2C	U632	3A
CR712	2F	Q676	2C	R656	2A	R738	2C	U740	3E
CR717	2F	Q678	2B	R657	2B	R739	3E	U752	2E
CR734	3E	Q682	1B	R662	3A	R740	3C	U800	4G
CR738	3C	Q684	1A	R663	3B	R741	3A	U810	4G
CR750	2E	Q694	2C	R664	2A	R743	2C	U812	4F
CR753	3A	Q702	1H	R665	2A	R744	2C	U814	4E
CR754	3B	Q704	1H	R666	3A	R752	2F	U816	3E
CR764	1E	Q708	1G	R667	3B	R753	3B	U818	3F
		Q714	2F	R668	2A	R754	3B	U820	3G
J608	5E	Q718	2F	R671	2C	R760	1E	U824	3F
J838	3F	Q722	3F	R672	2B	R761	1E	U828	4F
		Q732	3E	R673	2C	R762	1F	U838	3G
L800	5G	Q734	3E	R674	1D	R764	1F		
		Q736	3D	R675	1C	R765	1F	Y800	4G
P510	2D	Q738	3C	R676	2B	R766	1G		

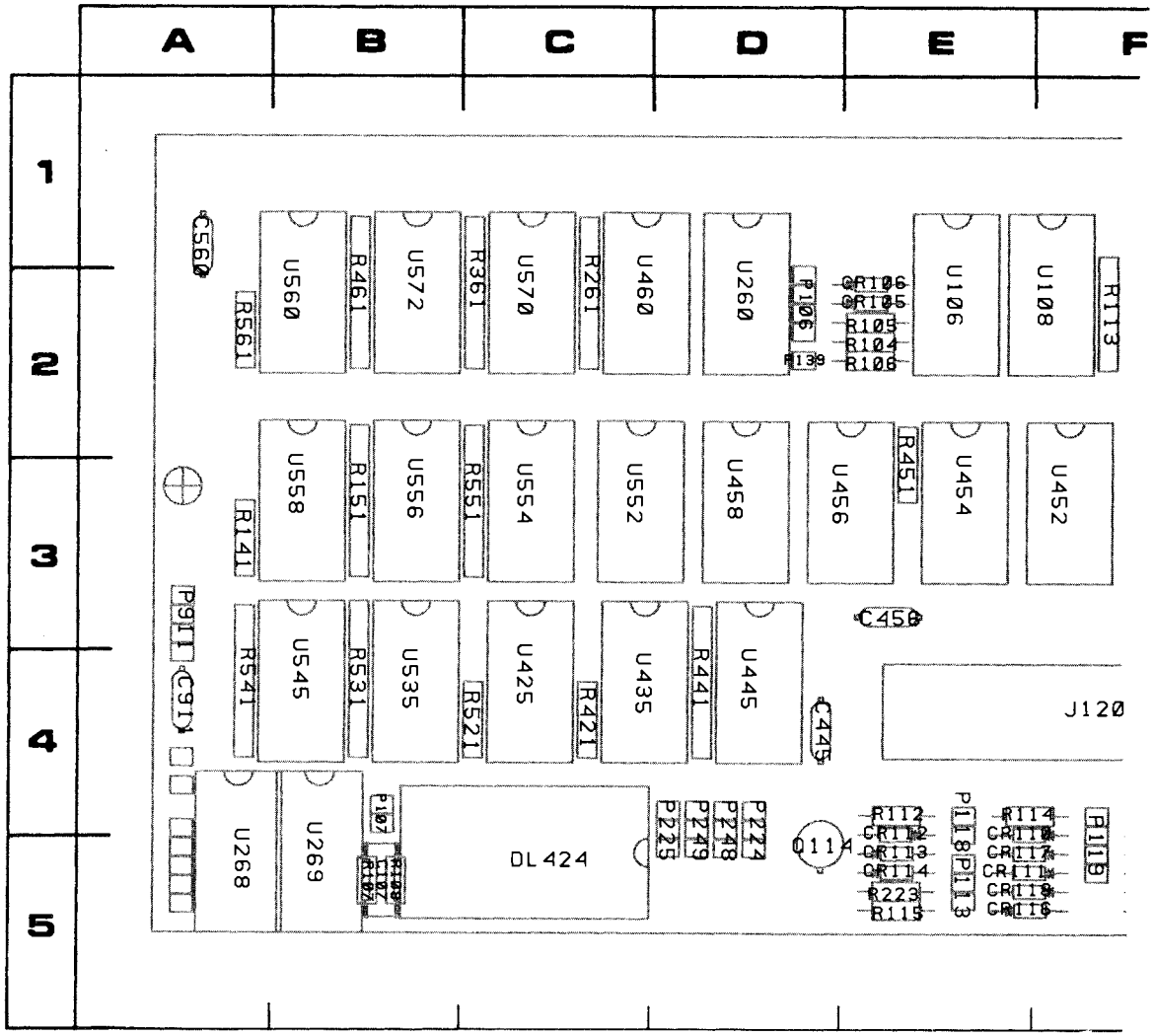

COMPONENT LOCATIONS AS VIEWED WITH BOARD INSTALLED. FOR VIEW OF COMPONENT SIDE OF BOARD, SEE FIGURE 8-3 IN THIS SECTION.

Figure 8-14. Partial A2—Memory circuit board. Component locations as viewed with board installed.

CKT NO	GRID COORD	CKT NO	GRID COORD	CKT NO	GRID COORD	CKT NO	GRID COORD	CKT NO	GRID COORD	CKT NO	GRID COORD	CKT NO	GRID COORD
C107	5B	CR118	5E	P139	2D	R108	5B	R361	2C	U235	4I	U460	2C
C110	2G	CR119	5G	P212	5J	R111	2G	R421	4C	U245	4J	U535	4B
C130	1G	CR120	4F	P213	5J	R112	4E	R441	4D	U252	3J	U545	4B
C150	1I	CR121	5G	P224	4D	R113	2F	R451	3E	U254	3J	U552	3C
C252	3K	CR122	5F	P225	4D	R114	4E	R461	2B	U256	3I	U554	3C
C356	3F	CR123	4G	P236	5J	R115	5E	R521	4C	U258	3H	U556	3B
C445	4D	CR124	5F	P237	5J	R119	5G	R531	4B	U260	2D	U558	3B
C456	3E			P248	4D	R120	4F	R541	4A	U268	5A	U560	2B
C560	1A	DL224	5I	P249	4D	R121	5G	R551	3C	U269	5B	U570	2C
C911	4A	DL424	5C	P350	4K	R122	4G	R561	2A	U335	4H	U572	2B
C935	4K			P532	5G	R125	5F			U345	4H		
		J108	1G	P538	4H	R141	3A	U106	2E	U352	3H		
CR105	2E	J120	4F	P550	1K	R150	2J	U108	2F	U354	3G		
CR106	2E	J138	2G	P911	3A	R151	3B	U110	2F	U356	3G		
CR110	4E					R221	4I	U120	2H	U358	3F		
CR111	5E	P106	2D	Q112	5G	R223	5E	U130	2G	U425	4C		
CR112	4E	P107	4B	Q114	5D	R241	4J	U132	2H	U435	4C		
CR113	5E	P112	3K			R251	3J	U132	2H	U445	4D		
CR114	5E	P113	5E	R104	2E	R261	2C	U136	2I	U452	3F		
CR115	5F	P114	4H	R105	2E	R321	4H	U140	2J	U454	3E		
CR116	5E	P118	4E	R106	2E	R341	4H	U150	2I	U456	3D		
CR117	5E	P119	5F	R107	5B	R351	3H	U225	4I	U458	3D		

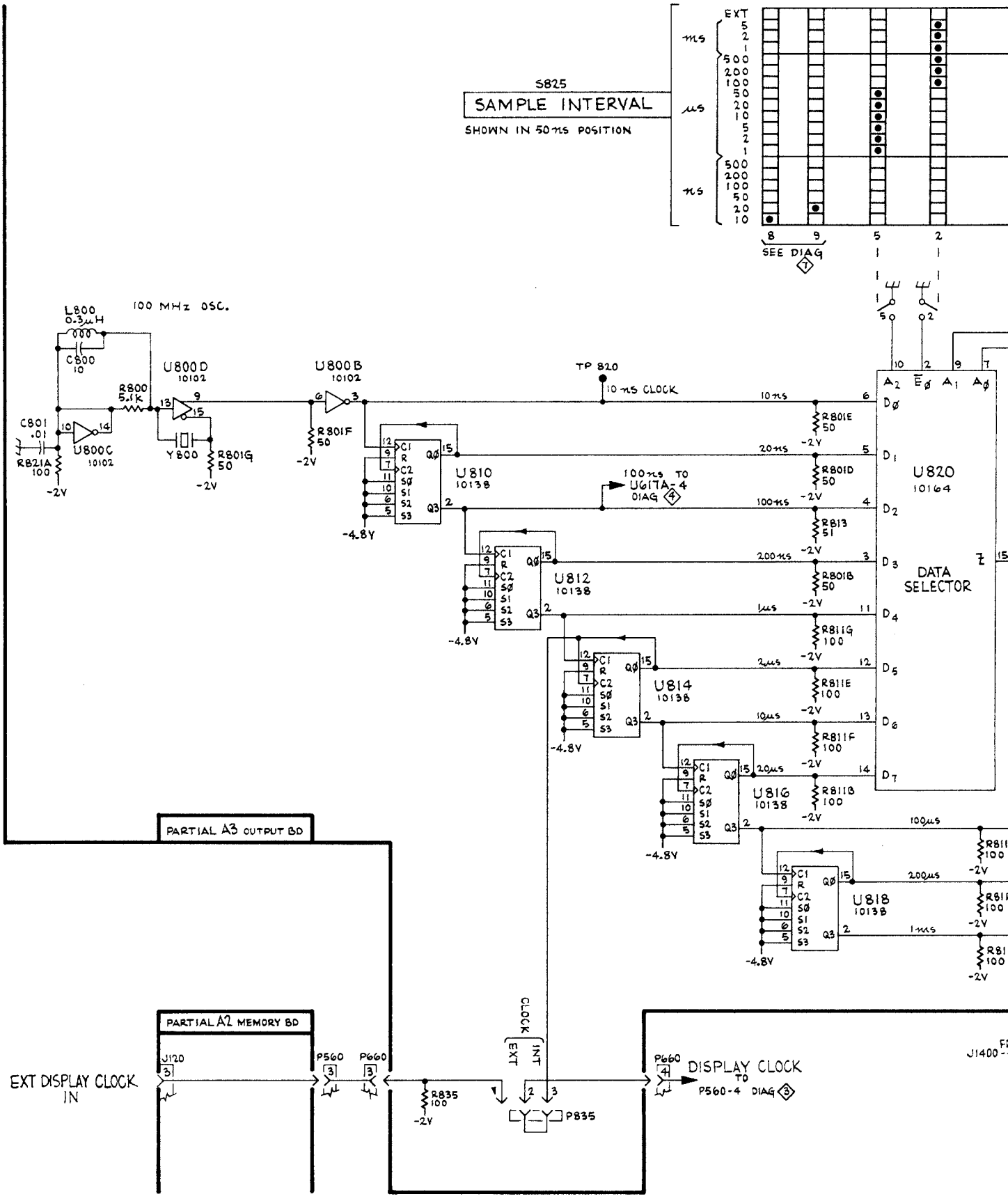
S825
SAMPLE INTERVAL
SHOWN IN 50 ns POSITION
EXT
ns
μs
SEE DIAG 7
100 MHz OSC.
L800 0.3μH
C800 10
R800 5.1k
C801 .01
R821A 100
U800C 10102
U800D 10102
U800B 10102
Y800
R801G 50
R801F 50
TP 820
10 ns CLOCK
U810 10138
U812 10138
U814 10138
U816 10138
U818 10138
100 ns TO U617A-4 DIAG 4
U820 10164
DATA SELECTOR
PARTIAL A3 OUTPUT BD
PARTIAL A2 MEMORY BD
EXT DISPLAY CLOCK IN
J120
P560
P660
R835 100
CLOCK
EXT
INT
P835
DISPLAY CLOCK TO P560-4 DIAG 3
J1400

7D01

@

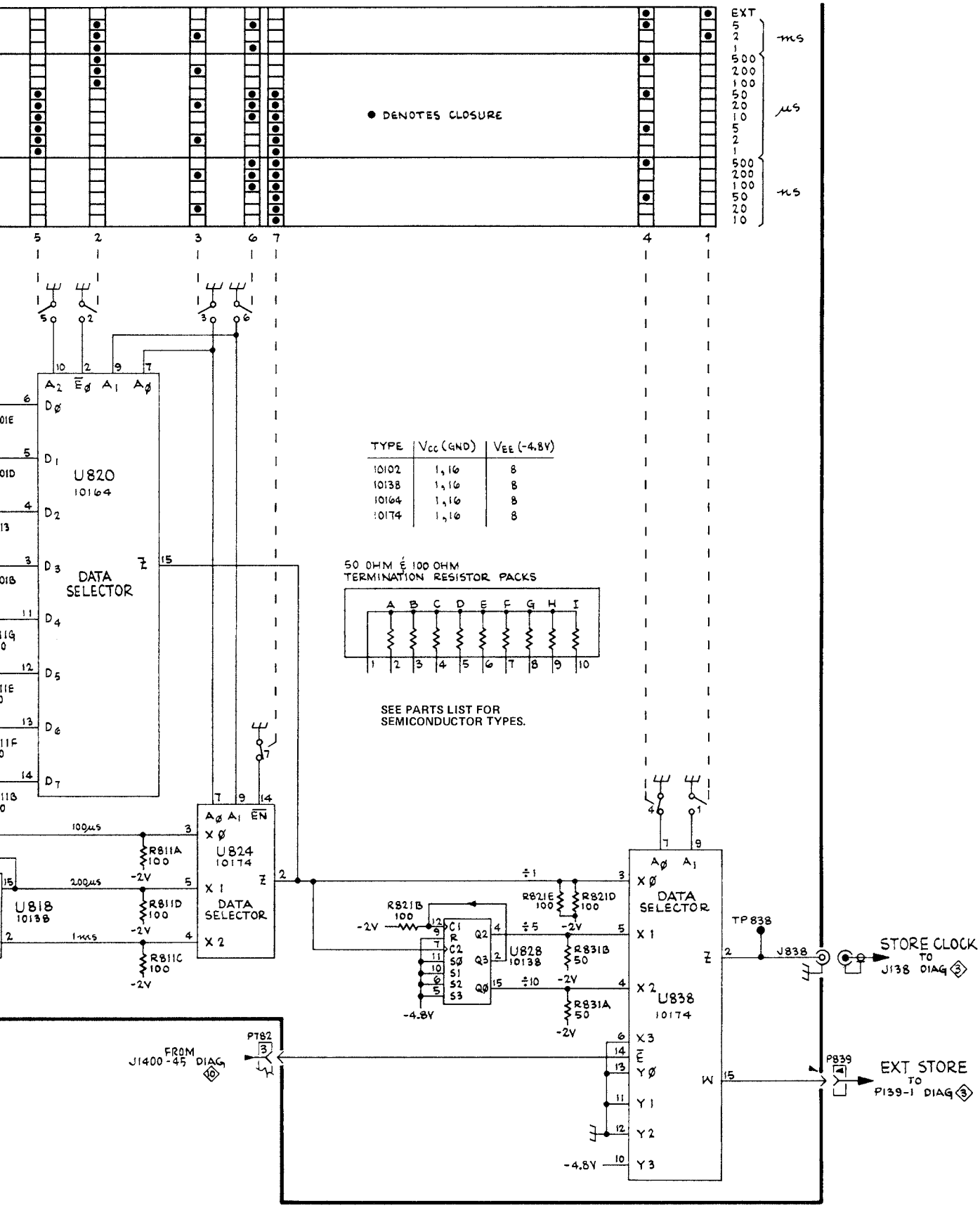

TYPE	V_{CC} (GND)	V_{EE} (-4.8V)
10102	1, 16	8
10138	1, 16	8
10164	1, 16	8
10174	1, 16	8

50 OHM & 100 OHM
TERMINATION RESISTOR PACKS

SEE PARTS LIST FOR
SEMICONDUCTOR TYPES.

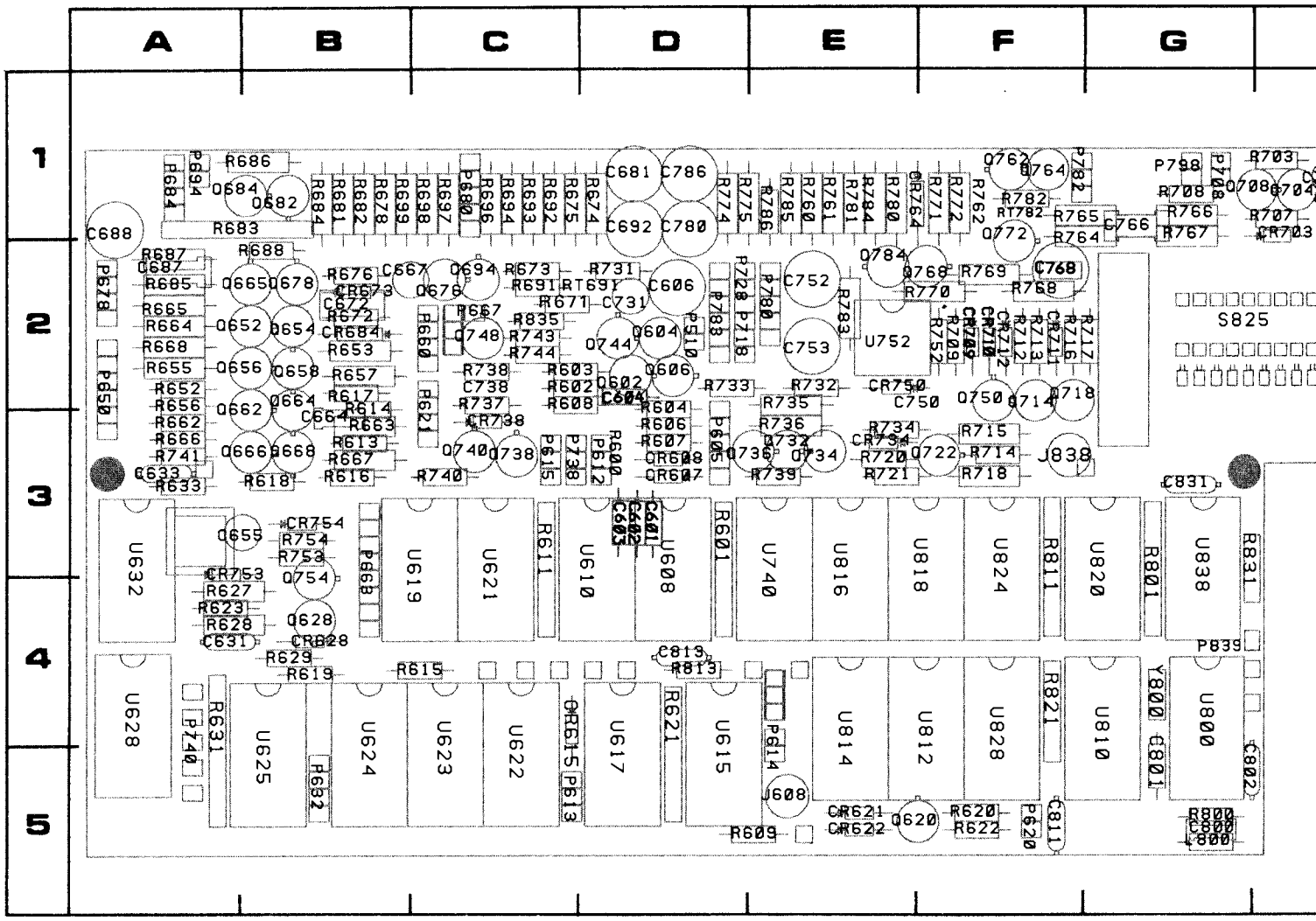

COMPONENT LOCATIONS AS VIEWED WITH BOARD INSTALLED. FOR VIEW OF COMPONENT SIDE OF BOARD, SEE FIGURE 8-5 IN THIS SECTIO

Figure 8-13. A3—Output circuit board. Component locations as viewed with board installed.

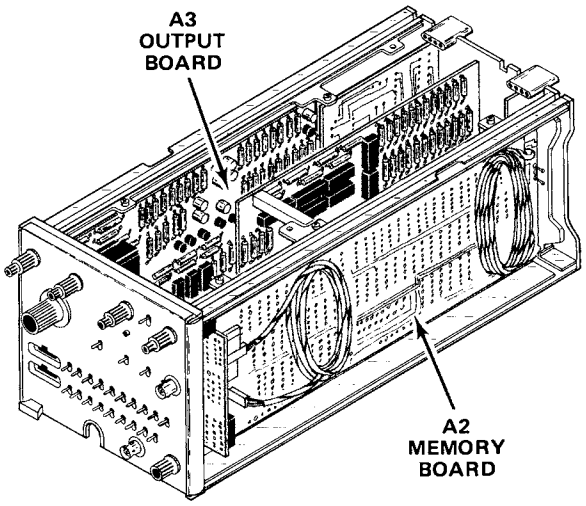

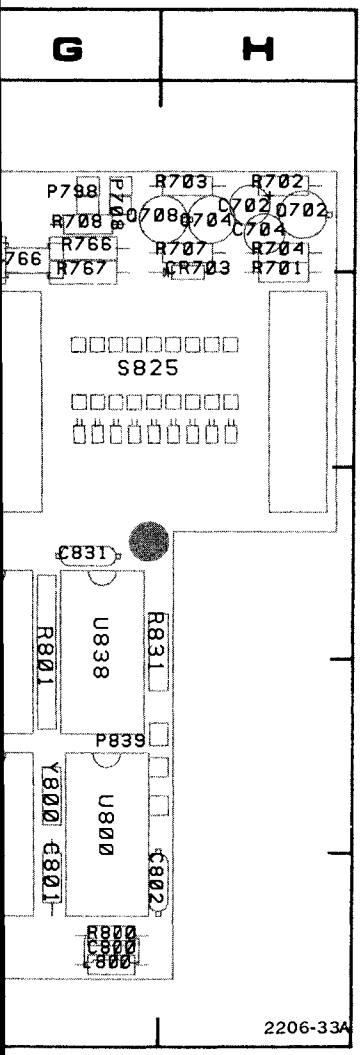

RE 8-5 IN THIS SECTION.

CKT NO	GRID LOC	CKT NO	GRID LOC	CKT NO	GRID LOC	CKT NO	GRID LOC	CKT NO	GRID LOC
C601	3D	L800	5G	Q736	3D	R676	2B	R767	1G
C602	3D			Q738	3C	R678	1B	R768	2F
C603	3D	P510	2D	Q740	3C	R681	1B	R769	2F
C604	2D	P605	3D	Q744	2D	R682	1B	R770	2F
C606	2D	P612	3D	Q748	2C	R683	1A	R771	1F
C631	4A	P613	5C	Q750	2F	R684	1B	R772	1F
C633	3A	P614	4E	Q754	3B	R685	2A	R774	1D
C655	3A	P615	3C	Q762	1F	R686	1A	R775	1D
C664	3B	P620	5F	Q764	1F	R687	2A	R780	1E
C667	2B	P621	2C	Q768	2F	R688	2B	R781	1E
C672	2B	P632	5B	Q772	1F	R691	2C	R782	1F
C681	1D	P650	2A	Q784	2E	R692	1C	R783	2E
C687	2A	P660	2C			R693	1C	R784	1E
C688	1A	P663	3B	R600	3D	R694	1C	R785	1E
C692	1D	P667	2C	R601	3D	R696	1C	R786	1E
C702	1H	P678	2A	R602	2C	R697	1C	R800	5G
C704	1H	P680	1C	R603	2C	R698	1C	R801	3G
C731	2D	P684	1A	R604	2D	R699	1B	R811	3F
C738	2C	P694	1A	R606	3D	R701	1H	R813	4D
C750	2E	P708	1G	R607	3D	R702	1H	R821	4F
C752	2E	P718	2D	R608	2C	R703	1H	R831	3G
C753	2E	P738	3C	R609	5D	R704	1H	R835	2C
C766	1G	P740	4A	R611	3C	R707	1H		
C768	2F	P780	2E	R613	3B	R708	1G	RT691	2C
C780	1D	P782	1F	R614	2B	R709	2F	RT782	1F
C786	1D	P783	2D	R615	4B	R712	2F		
C800	5G	P798	1G	R616	3B	R713	2F	S825	2G
C801	5G	P839	4G	R617	2B	R714	3F		
C802	5G			R618	3B	R715	3F	U608	3D
C811	5F	Q602	2D	R619	4B	R716	2F	U610	3D
C813	4D	Q604	2D	R620	5F	R717	2F	U615	5D
C831	3G	Q606	2D	R621	4D	R718	3F	U617	5D
		Q620	5E	R622	5F	R720	3E	U619	3C
CR607	3D	Q628	4B	R623	4A	R721	3E	U621	3C
CR608	3D	Q652	2A	R627	4A	R731	2D	U622	5C
CR615	4C	Q654	2B	R628	4A	R732	2E	U623	5C
CR621	5E	Q656	2A	R629	4B	R733	2D	U624	5B
CR622	5E	Q658	2B	R631	4A	R734	3E	U625	5B
CR628	4B	Q662	2A	R633	3A	R735	2E	U628	4A
CR673	2B	Q664	2B	R652	2A	R736	3E	U632	3A
CR684	2B	Q665	2A	R653	2B	R737	2C	U740	3E
CR703	1H	Q666	3A	R655	2A	R738	2C	U752	2E
CR709	2F	Q668	3B	R656	2A	R739	3E	U800	4G
CR710	2F	Q676	2C	R657	2B	R740	3C	U810	4G
CR711	2F	Q678	2B	R662	3A	R741	3A	U812	4F
CR712	2F	Q682	1B	R663	3B	R743	2C	U814	4E
CR717	2F	Q684	1A	R664	2A	R744	2C	U816	3E
CR734	3E	Q694	2C	R665	2A	R752	2F	U818	3F
CR738	3C	Q702	1H	R666	3A	R753	3B	U820	3G
CR750	2E	Q704	1H	R667	3B	R754	3B	U824	3F
CR753	3A	Q708	1G	R668	2A	R760	1E	U828	4F
CR754	3B	Q714	2F	R671	2C	R761	1E	U838	3G
CR764	1E	Q718	2F	R672	2B	R762	1F		
		Q722	3F	R673	2C	R764	1F	Y800	4G
J608	5E	Q732	3E	R674	1D	R765	1F		
J838	3F	Q734	3E	R675	1C	R766	1G		

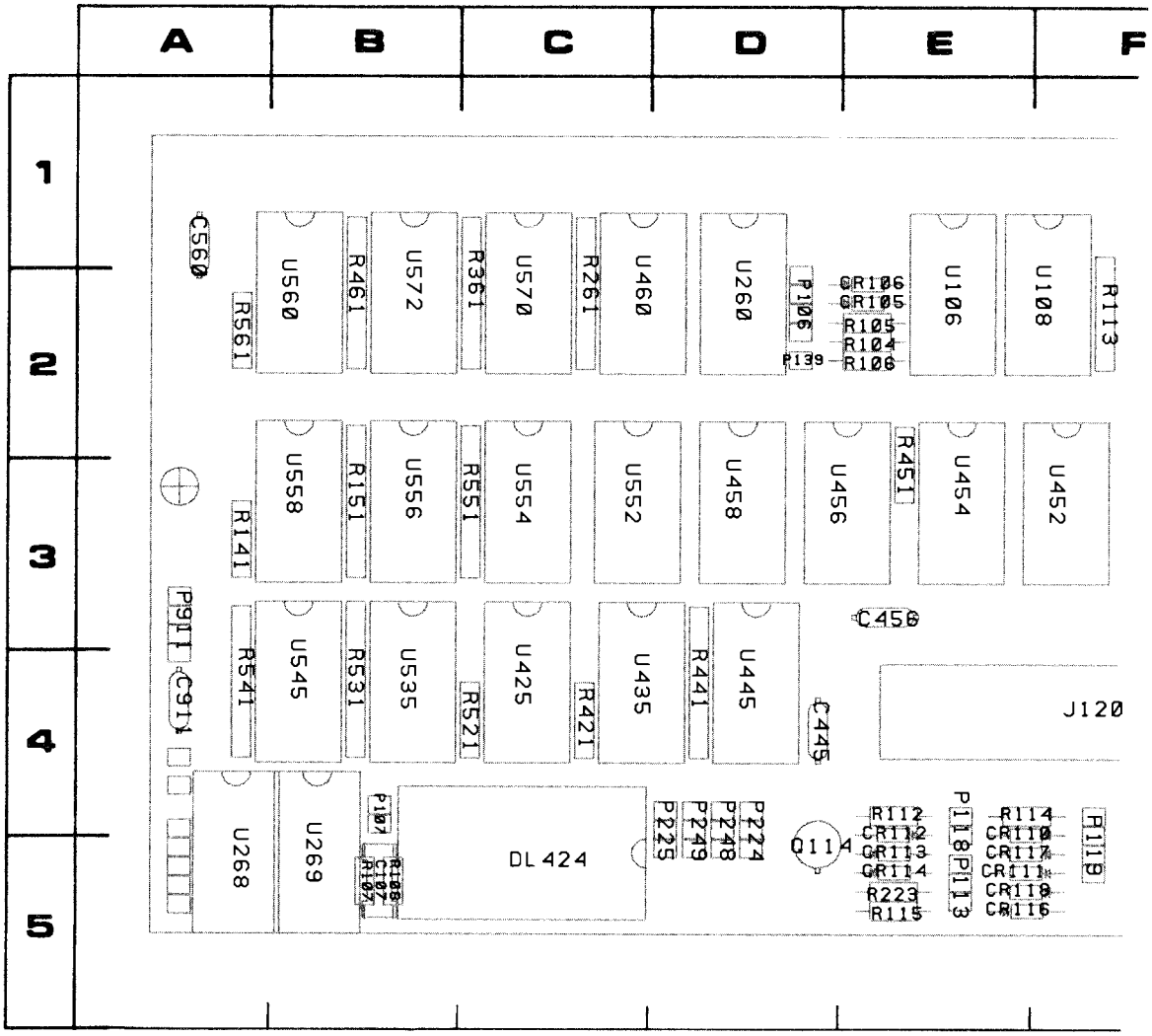

COMPONENT LOCATIONS AS VIEWED WITH BOARD INSTALLED. FOR VIEW OF COMPONENT SIDE OF BOARD, SEE FIGURE 8-3 IN THIS SECTION.

Figure 8-14. Partial A2—Memory circuit board. Component locations as viewed with board installed.

CKT NO	GRID COORD	CKT NO	GRID COORD	CKT NO	GRID COORD	CKT NO	GRID COORD	CKT NO	GRID COORD	CKT NO	GRID COORD	CKT NO	GRID COORD
C107	5B	CR118	5E	P139	2D	R108	5B	R361	2C	U235	4I	U460	2C
C110	2G	CR119	5G	P212	5J	R111	2G	R421	4C	U245	4J	U535	4B
C130	1G	CR120	4F	P213	5J	R112	4E	R441	4D	U252	3J	U545	4B
C150	1I	CR121	5G	P224	4D	R113	2F	R451	3E	U254	3J	U552	3C
C252	3K	CR122	5F	P225	4D	R114	4E	R461	2B	U256	3I	U554	3C
C356	3F	CR123	4G	P236	5J	R115	5E	R521	4C	U258	3H	U556	3B
C445	4D	CR124	5F	P237	5J	R119	5G	R531	4B	U260	2D	U558	3B
C456	3E			P248	4D	R120	4F	R541	4A	U268	5A	U560	2B
C560	1A	DL224	5I	P249	4D	R121	5G	R551	3C	U269	5B	U570	2C
C911	4A	DL424	5C	P350	4K	R122	4G	R561	2A	U335	4H	U572	2B
C935	4K			P532	5G	R125	5F			U345	4H		
		J108	1G	P538	4H	R141	3A	U106	2E	U352	3H		
CR105	2E	J120	4F	P550	1K	R150	2J	U108	2F	U354	3G		
CR106	2E	J138	2G	P911	3A	R151	3B	U110	2F	U356	3G		
CR110	4E					R221	4I	U120	2H	U358	3F		
CR111	5E	P106	2D	Q112	5G	R223	5E	U130	2G	U425	4C		
CR112	4E	P107	4B	Q114	5D	R241	4J	U132	2H	U435	4C		
CR113	5E	P112	3K			R251	3J	U132	2H	U445	4D		
CR114	5E	P113	5E	R104	2E	R261	2C	U136	2I	U452	3F		
CR115	5F	P114	4H	R105	2E	R321	4H	U140	2J	U454	3E		
CR116	5E	P118	4E	R106	2E	R341	4H	U150	2I	U456	3D		
CR117	5E	P119	5F	R107	5B	R351	3H	U225	4I	U458	3D		

VOLTAGE AND WAVEFORM CONDITIONS

Voltages and Waveforms shown are typical, but may vary between instruments.

TEST SETUP: The 7D01 is connected to the 7000-series mainframe through two 067-0616-00 Flexible Plug-in Extenders. The 7D01 controls are set as follows:

DISPLAY TIME. . . . . .∞
DATA CHANNELS. 0-3
DATA POSITION. . . . . .CENTER
TRIGGER SOURCE . . . . . .W.R.
WORD RECOGNIZER Ch 7. . . . . .LO
all others X

The 7D01 is connected to produce a display as shown in waveform display (1). The timebase unit is triggered on the falling edge of the channel 2 signal (waveform display (2)).

(1)

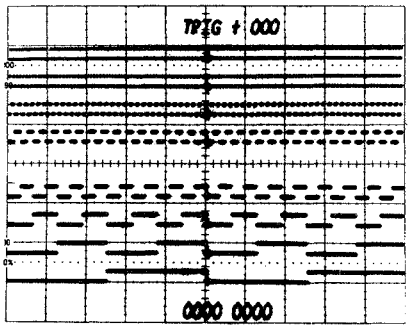

(2)

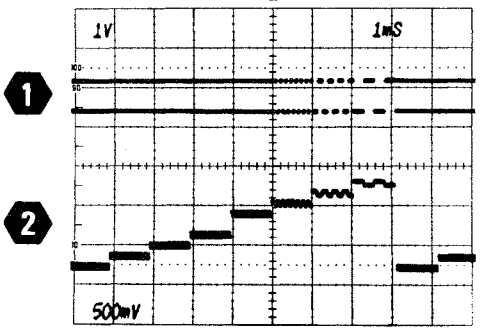

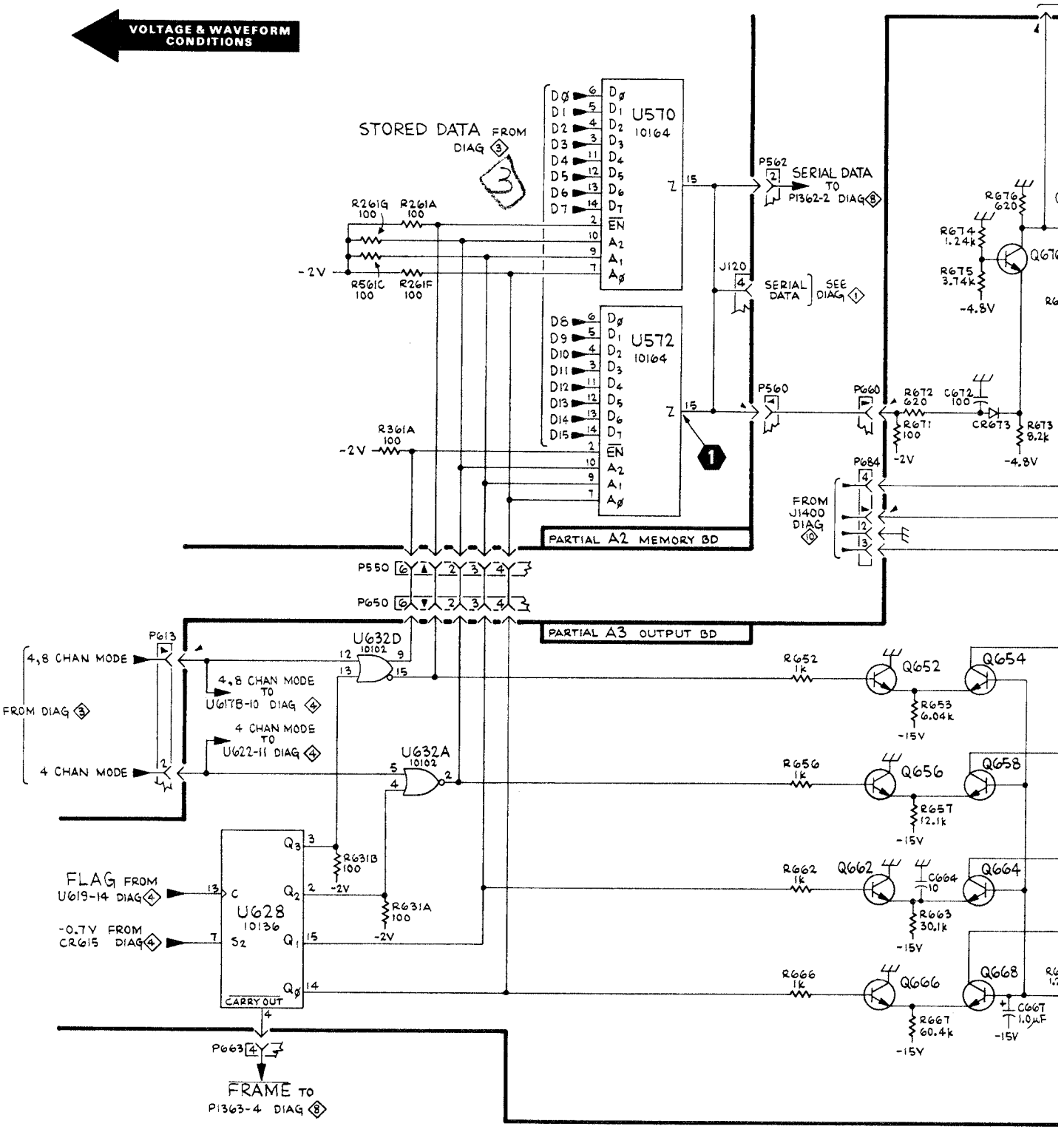
VOLTAGE & WAVEFORM CONDITIONS
STORED DATA FROM DIAG 3
U570 10164
U572 10164
SERIAL DATA TO P1362-2 DIAG 8
SERIAL DATA SEE DIAG 1
PARTIAL A2 MEMORY BD
PARTIAL A3 OUTPUT BD
FROM J1400 DIAG 10
4,8 CHAN MODE
4 CHAN MODE
FROM DIAG 3
4,8 CHAN MODE TO U617B-10 DIAG 4
4 CHAN MODE TO U622-11 DIAG 4
U632D 10102
U632A 10102
U628 10136
FLAG FROM U619-14 DIAG 4
-0.7V FROM CR615 DIAG 4
CARRY OUT
FRAME TO P1363-4 DIAG 8
Q652
Q654
Q656
Q658
Q662
Q664
Q666
Q668

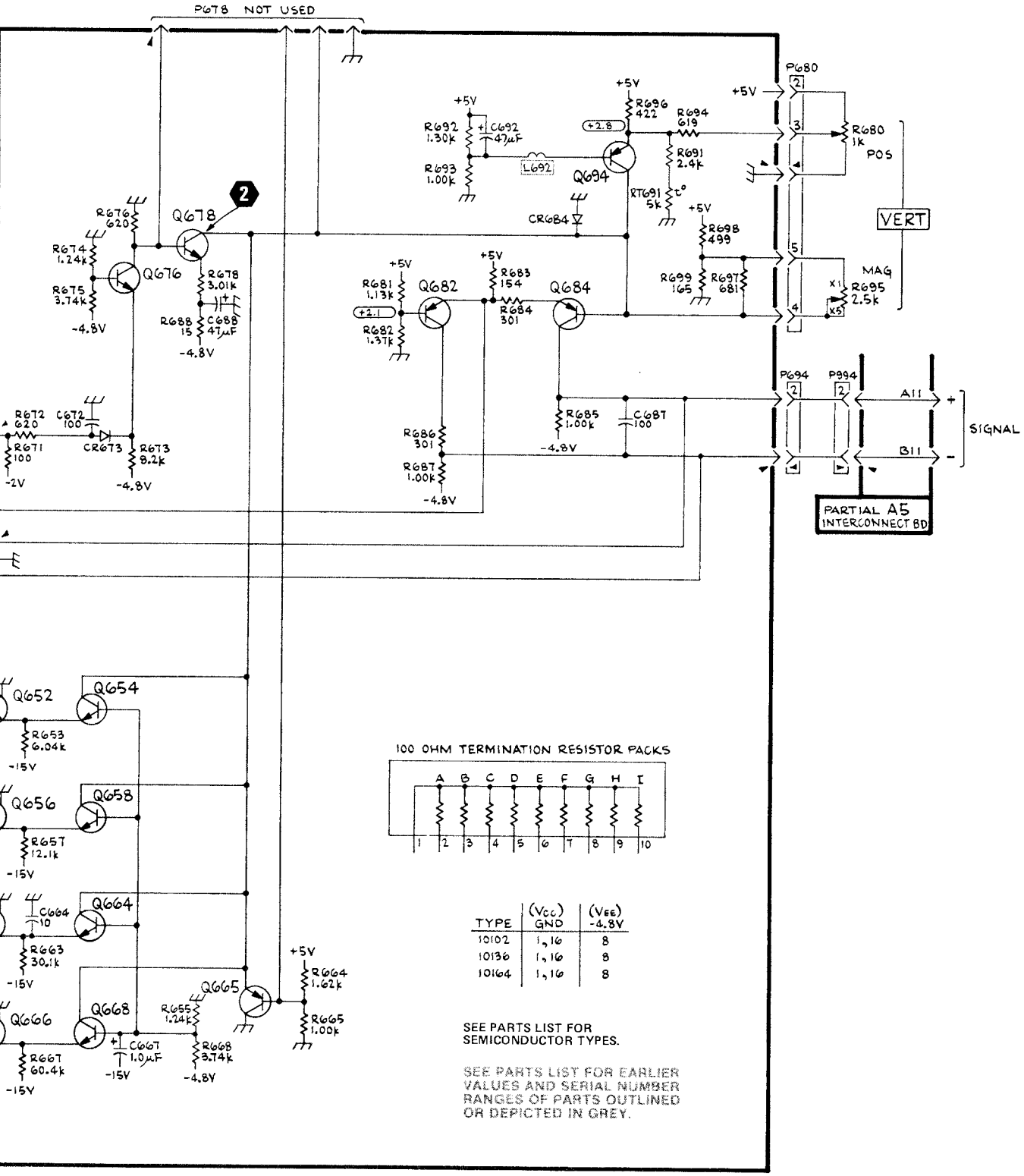

TYPE	(Vcc) GND	(VEE) -4.8V
10102	1, 16	8
10136	1, 16	8
10164	1, 16	8

VERT OUT

EV. A, MAR 77

(SN B020000 & UP)

VERTICAL OUTPUT

6

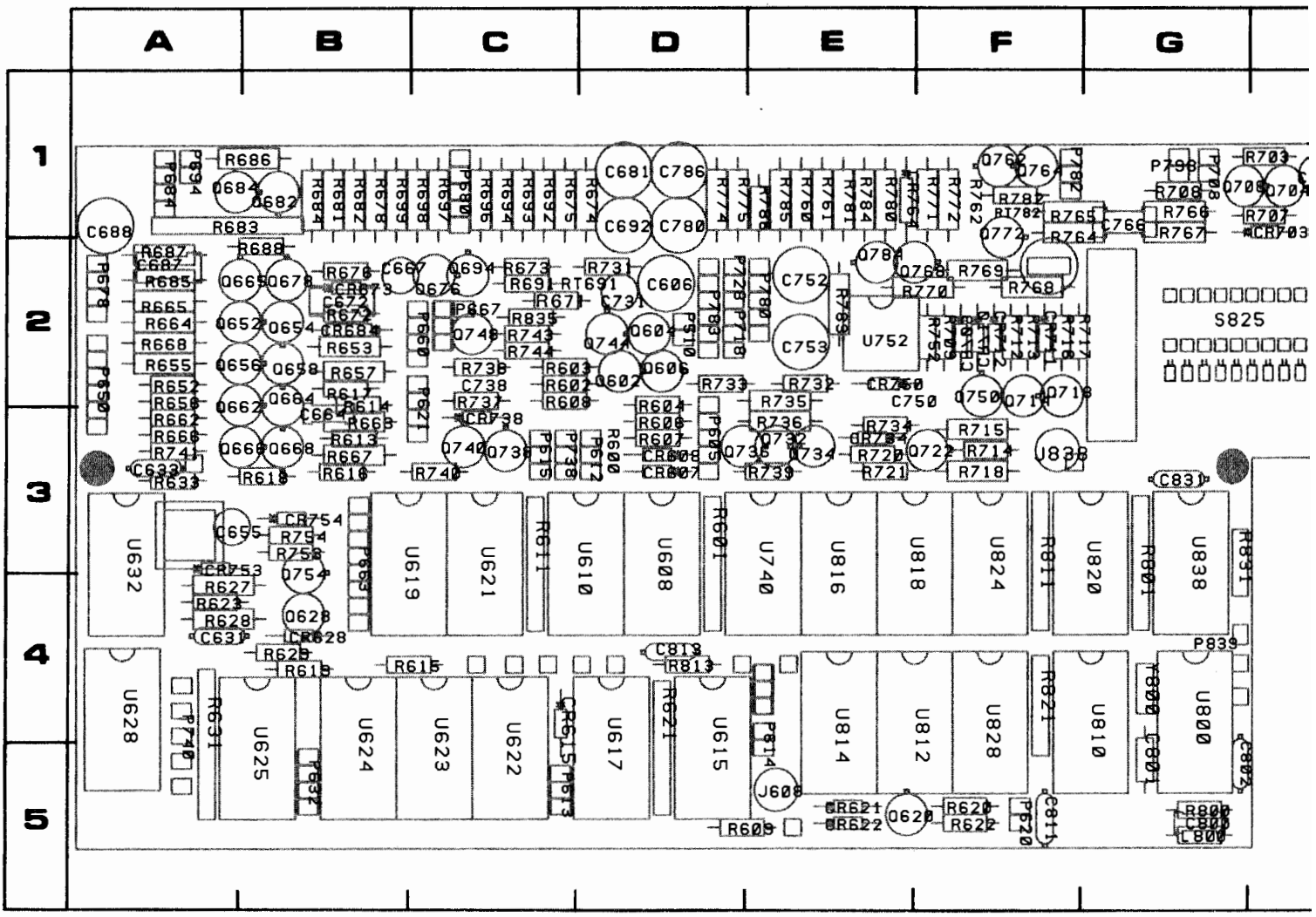

COMPONENT LOCATIONS AS VIEWED WITH BOARD INSTALLED. FOR VIEW OF COMPONENT SIDE OF BOARD, SEE FIGURE 8-5 IN THIS SECTIO

Figure 8-15. A3—Output circuit board. Component locations as viewed with board installed.

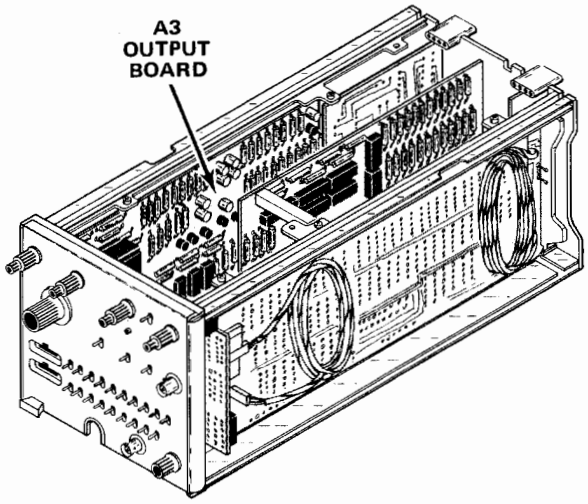

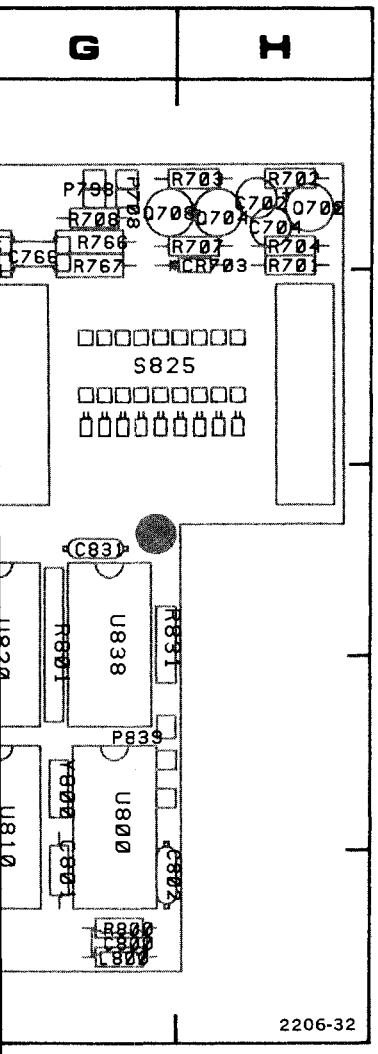

SURE 8-5 IN THIS SECTION.

CKT NO	GRID COORD	CKT NO	GRID COORD	CKT NO	GRID COORD	CKT NO	GRID COORD	CKT NO	GRID COORD
C606	2D	P605	3D	Q740	3C	R678	1B	R767	1G
C631	4A	P612	3D	Q744	2D	R681	1B	R768	2F
C633	3A	P613	5C	Q748	2C	R682	1B	R769	2F
C655	3A	P614	4E	Q750	2F	R683	1A	R770	2F
C664	3B	P615	3C	Q754	3B	R684	1B	R771	1F
C667	2B	P620	5F	Q762	1F	R685	2A	R772	1F
C672	2B	P621	2C	Q764	1F	R686	1A	R774	1D
C681	1D	P632	5B	Q768	2F	R687	2A	R775	1D
C687	2A	P650	2A	Q772	1F	R688	2B	R780	1E
C688	1A	P660	2C	Q784	2E	R691	2C	R781	1E
C692	1D	P663	3B			R692	1C	R782	1F
C702	1H	P667	2C	R600	3D	R693	1C	R783	2E
C704	1H	P678	2A	R601	3D	R694	1C	R784	1E
C731	2D	P680	1C	R602	2C	R696	1C	R785	1E
C738	2C	P684	1A	R603	2C	R697	1C	R786	1E
C750	2E	P694	1A	R604	2D	R698	1C	R800	5G
C752	2E	P708	1G	R606	3D	R699	1B	R801	3G
C753	2E	P718	2D	R607	3D	R701	1H	R811	3F
C766	1G	P738	3C	R608	2C	R702	1H	R813	4D
C780	1D	P740	4A	R609	5D	R703	1H	R821	4F
C786	1D	P780	2E	R611	3C	R704	1H	R831	3G
C800	5G	P782	1F	R613	3B	R707	1H	R835	2C
C801	5G	P783	2D	R614	2B	R708	1G		
C802	5G	P798	1G	R615	4B	R709	2F	RT691	2C
C811	5F	P839	4G	R616	3B	R712	2F	RT782	1F
C813	4D			R617	2B	R713	2F		
C831	3G	Q602	2D	R618	3B	R714	3F	S825	2G
		Q604	2D	R619	4B	R715	3F		
CR607	3D	Q606	2D	R620	5F	R716	2F	U608	3D
CR608	3D	Q620	5E	R621	4D	R717	2F	U610	3D
CR615	4C	Q628	4B	R622	5F	R718	3F	U615	5D
CR621	5E	Q652	2A	R623	4A	R720	3E	U617	5D
CR622	5E	Q654	2B	R627	4A	R721	3E	U619	3C
CR628	4B	Q656	2A	R628	4A	R731	2D	U621	3C
CR673	2B	Q658	2B	R629	4B	R732	2E	U622	5C
CR684	2B	Q662	2A	R631	4A	R733	2D	U623	5C
CR703	1H	Q664	2B	R633	3A	R734	3E	U624	5B
CR709	2F	Q665	2A	R652	2A	R735	2E	U625	5B
CR710	2F	Q666	3A	R653	2B	R736	3E	U628	4A
CR711	2F	Q668	3B	R655	2A	R737	2C	U632	3A
CR712	2F	Q676	2C	R656	2A	R738	2C	U740	3E
CR717	2F	Q678	2B	R657	2B	R739	3E	U752	2E
CR734	3E	Q682	1B	R662	3A	R740	3C	U800	4G
CR738	3C	Q684	1A	R663	3B	R741	3A	U810	4G
CR750	2E	Q694	2C	R664	2A	R743	2C	U812	4F
CR753	3A	Q702	1H	R665	2A	R744	2C	U814	4E
CR754	3B	Q704	1H	R666	3A	R752	2F	U816	3E
CR764	1E	Q708	1G	R667	3B	R753	3B	U818	3F
		Q714	2F	R668	2A	R754	3B	U820	3G
J608	5E	Q718	2F	R671	2C	R760	1E	U824	3F
J838	3F	Q722	3F	R672	2B	R761	1E	U828	4F
		Q732	3E	R673	2C	R762	1F	U838	3G
L800	5G	Q734	3E	R674	1D	R764	1F		
		Q736	3D	R675	1C	R765	1F	Y800	4G
P510	2D	Q738	3C	R676	2B	R766	1G		

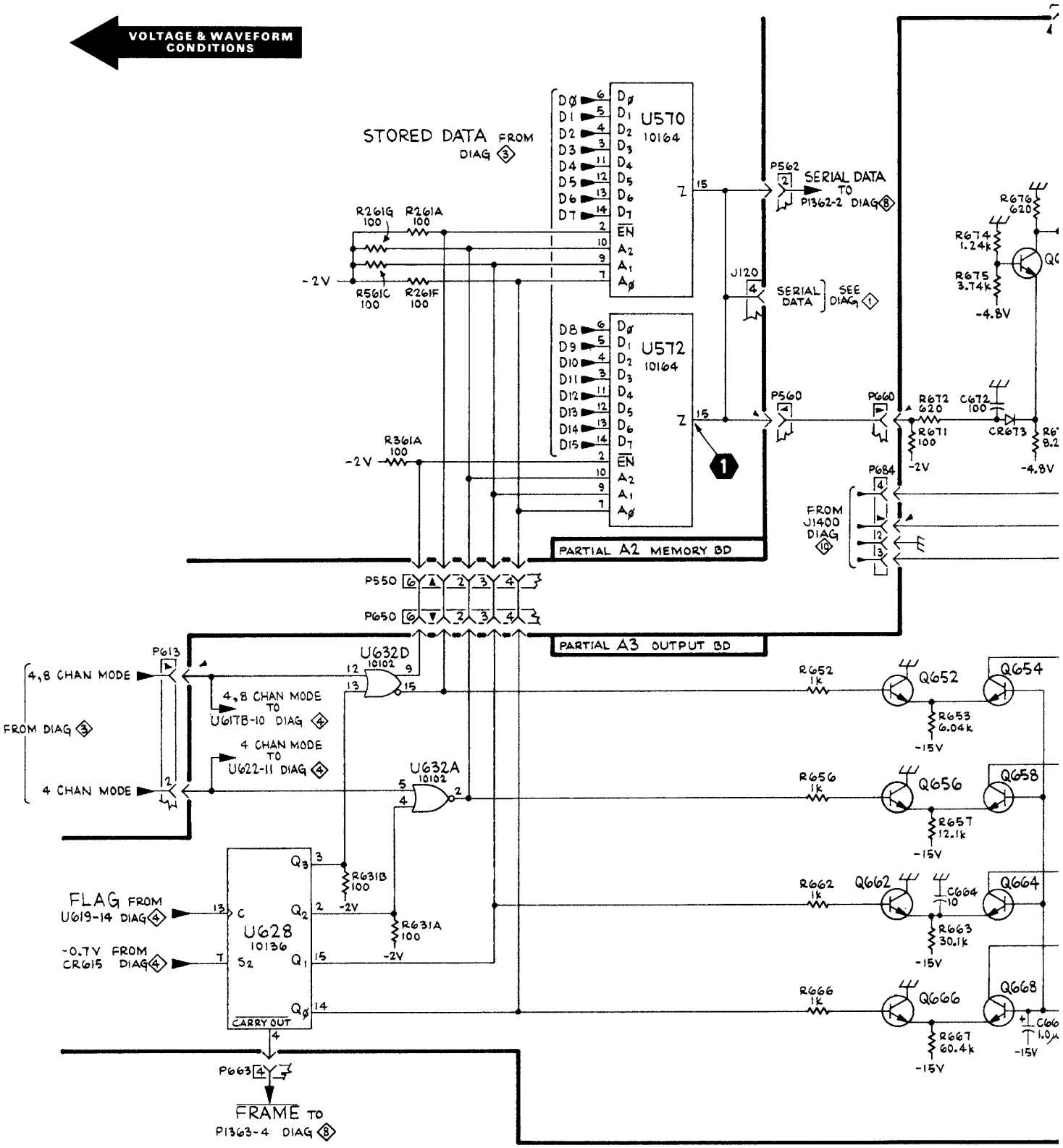
VOLTAGE & WAVEFORM CONDITIONS
STORED DATA FROM DIAG 3
U570 10164
U572 10164
SERIAL DATA TO P1362-2 DIAG 8
SERIAL DATA SEE DIAG 1
PARTIAL A2 MEMORY BD
PARTIAL A3 OUTPUT BD
FROM J1400 DIAG 10
4,8 CHAN MODE
FROM DIAG 3
4 CHAN MODE
4,8 CHAN MODE TO U617B-10 DIAG 4
4 CHAN MODE TO U622-11 DIAG 4
U632D 10102
U632A 10102
U628 10136
FLAG FROM U619-14 DIAG 4
-0.7V FROM CR615 DIAG 4
CARRY OUT
FRAME TO P1363-4 DIAG 8
Q652
Q654
Q656
Q658
Q662
Q664
Q666
Q668

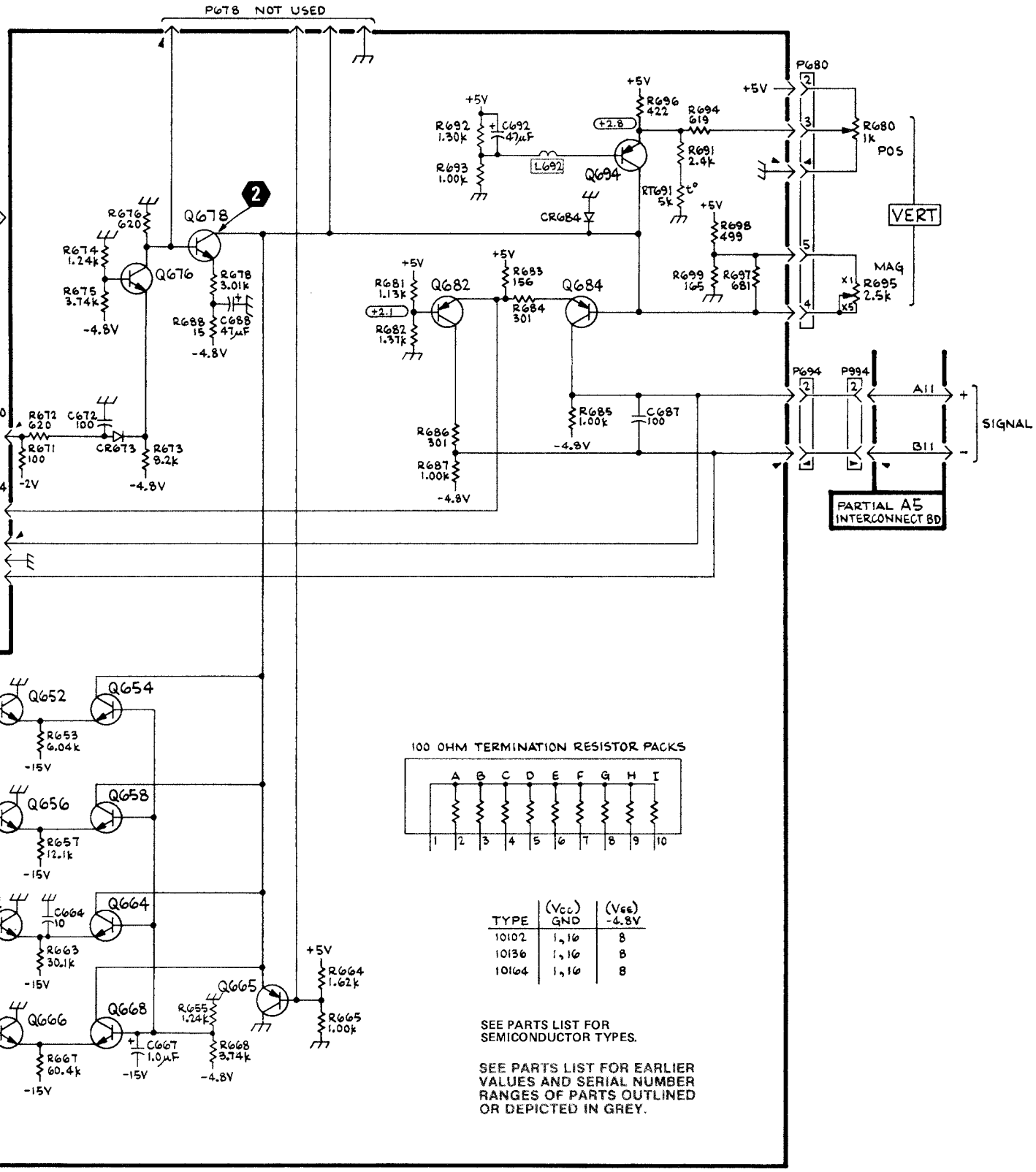

TYPE	(V_{CC}) GND	(V_{EE}) -4.8V
10102	1, 16	8
10136	1, 16	8
10164	1, 16	8

SEE PARTS LIST FOR SEMICONDUCTOR TYPES.

SEE PARTS LIST FOR EARLIER VALUES AND SERIAL NUMBER RANGES OF PARTS OUTLINED OR DEPICTED IN GREY.

VERT OUT

REV. B, JUNE 1978

(SN B020000 & UP)

VERTICAL OUTPUT

6

6

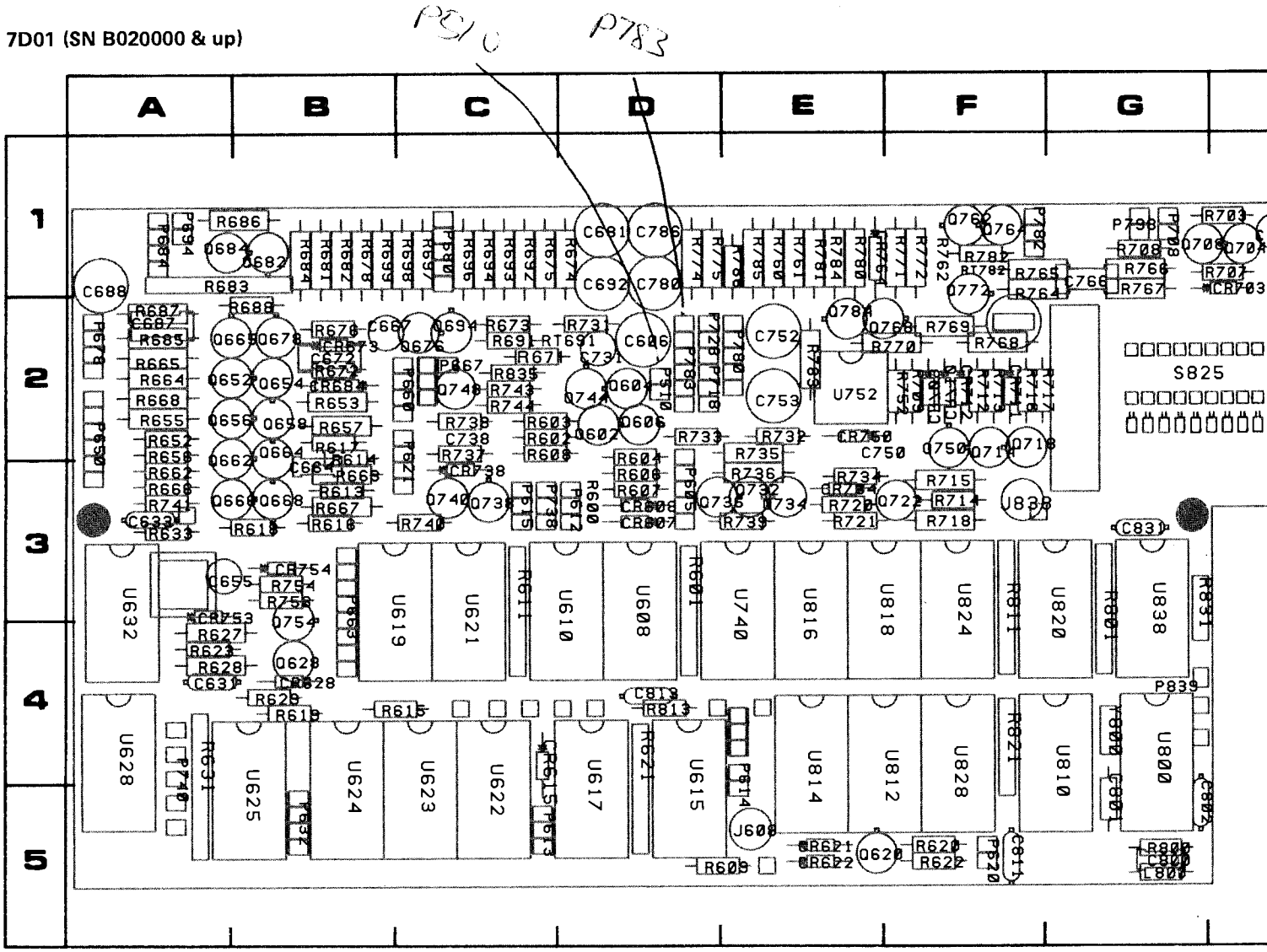

COMPONENT LOCATIONS AS VIEWED WITH BOARD INSTALLED. FOR VIEW OF COMPONENT SIDE OF BOARD, SEE FIGURE 8-5 IN THIS SECTIO

Figure 8-15. A3—Output circuit board. Component locations as viewed with board installed.

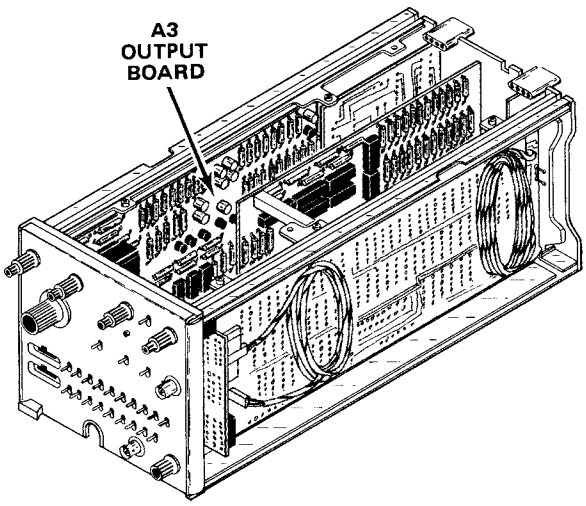

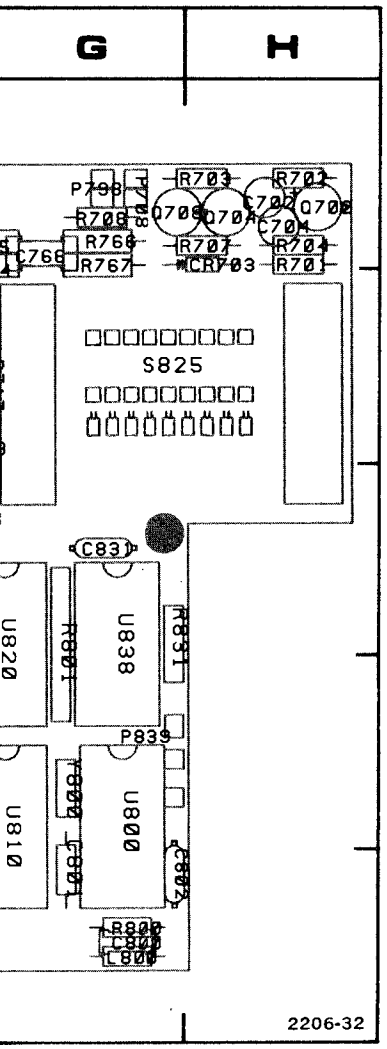

GURE 8-5 IN THIS SECTION.

CKT NO	GRID COORD	CKT NO	GRID COORD	CKT NO	GRID COORD	CKT NO	GRID COORD	CKT NO	GRID COORD
C606	2D	P605	3D	Q740	3C	R678	1B	R767	1G
C631	4A	P612	3D	Q744	2D	R681	1B	R768	2F
C633	3A	P613	5C	Q748	2C	R682	1B	R769	2F
C655	3A	P614	4E	Q750	2F	R683	1A	R770	2F
C664	3B	P615	3C	Q754	3B	R684	1B	R771	1F
C667	2B	P620	5F	Q762	1F	R685	2A	R772	1F
C672	2B	P621	2C	Q764	1F	R686	1A	R774	1D
C681	1D	P632	5B	Q768	2F	R687	2A	R775	1D
C687	2A	P650	2A	Q772	1F	R688	2B	R780	1E
C688	1A	P660	2C	Q784	2E	R691	2C	R781	1E
C692	1D	P663	3B			R692	1C	R782	1F
C702	1H	P667	2C	R600	3D	R693	1C	R783	2E
C704	1H	P678	2A	R601	3D	R694	1C	R784	1E
C731	2D	P680	1C	R602	2C	R696	1C	R785	1E
C738	2C	P684	1A	R603	2C	R697	1C	R786	1E
C750	2E	P694	1A	R604	2D	R698	1C	R800	5G
C752	2E	P708	1G	R606	3D	R699	1B	R801	3G
C753	2E	P718	2D	R607	3D	R701	1H	R811	3F
C766	1G	P738	3C	R608	2C	R702	1H	R813	4D
C780	1D	P740	4A	R609	5D	R703	1H	R821	4F
C786	1D	P780	2E	R611	3C	R704	1H	R831	3G
C800	5G	P782	1F	R613	3B	R707	1H	R835	2C
C801	5G	P783	2D	R614	2B	R708	1G		
C802	5G	P798	1G	R615	4B	R709	2F	RT691	2C
C811	5F	P839	4G	R616	3B	R712	2F	RT782	1F
C813	4D			R617	2B	R713	2F		
C831	3G	Q602	2D	R618	3B	R714	3F	S825	2G
		Q604	2D	R619	4B	R715	3F		
CR607	3D	Q606	2D	R620	5F	R716	2F	U608	3D
CR608	3D	Q620	5E	R621	4D	R717	2F	U610	3D
CR615	4C	Q628	4B	R622	5F	R718	3F	U615	5D
CR621	5E	Q652	2A	R623	4A	R720	3E	U617	5D
CR622	5E	Q654	2B	R627	4A	R721	3E	U619	3C
CR628	4B	Q656	2A	R628	4A	R731	2D	U621	3C
CR673	2B	Q658	2B	R629	4B	R732	2E	U622	5C
CR684	2B	Q662	2A	R631	4A	R733	2D	U623	5C
CR703	1H	Q664	2B	R633	3A	R734	3E	U624	5B
CR709	2F	Q665	2A	R652	2A	R735	2E	U625	5B
CR710	2F	Q666	3A	R653	2B	R736	3E	U628	4A
CR711	2F	Q668	3B	R655	2A	R737	2C	U632	3A
CR712	2F	Q676	2C	R656	2A	R738	2C	U740	3E
CR717	2F	Q678	2B	R657	2B	R739	3E	U752	2E
CR734	3E	Q682	1B	R662	3A	R740	3C	U800	4G
CR738	3C	Q684	1A	R663	3B	R741	3A	U810	4G
CR750	2E	Q694	2C	R664	2A	R743	2C	U812	4F
CR753	3A	Q702	1H	R665	2A	R744	2C	U814	4E
CR754	3B	Q704	1H	R666	3A	R752	2F	U816	3E
CR764	1E	Q708	1G	R667	3B	R753	3B	U818	3F
		Q714	2F	R668	2A	R754	3B	U820	3G
J608	5E	Q718	2F	R671	2C	R760	1E	U824	3F
J838	3F	Q722	3F	R672	2B	R761	1E	U828	4F
		Q732	3E	R673	2C	R762	1F	U838	3G
L800	5G	Q734	3E	R674	1D	R764	1F		
		Q736	3D	R675	1C	R765	1F	Y800	4G
P510	2D	Q738	3C	R676	2B	R766	1G		

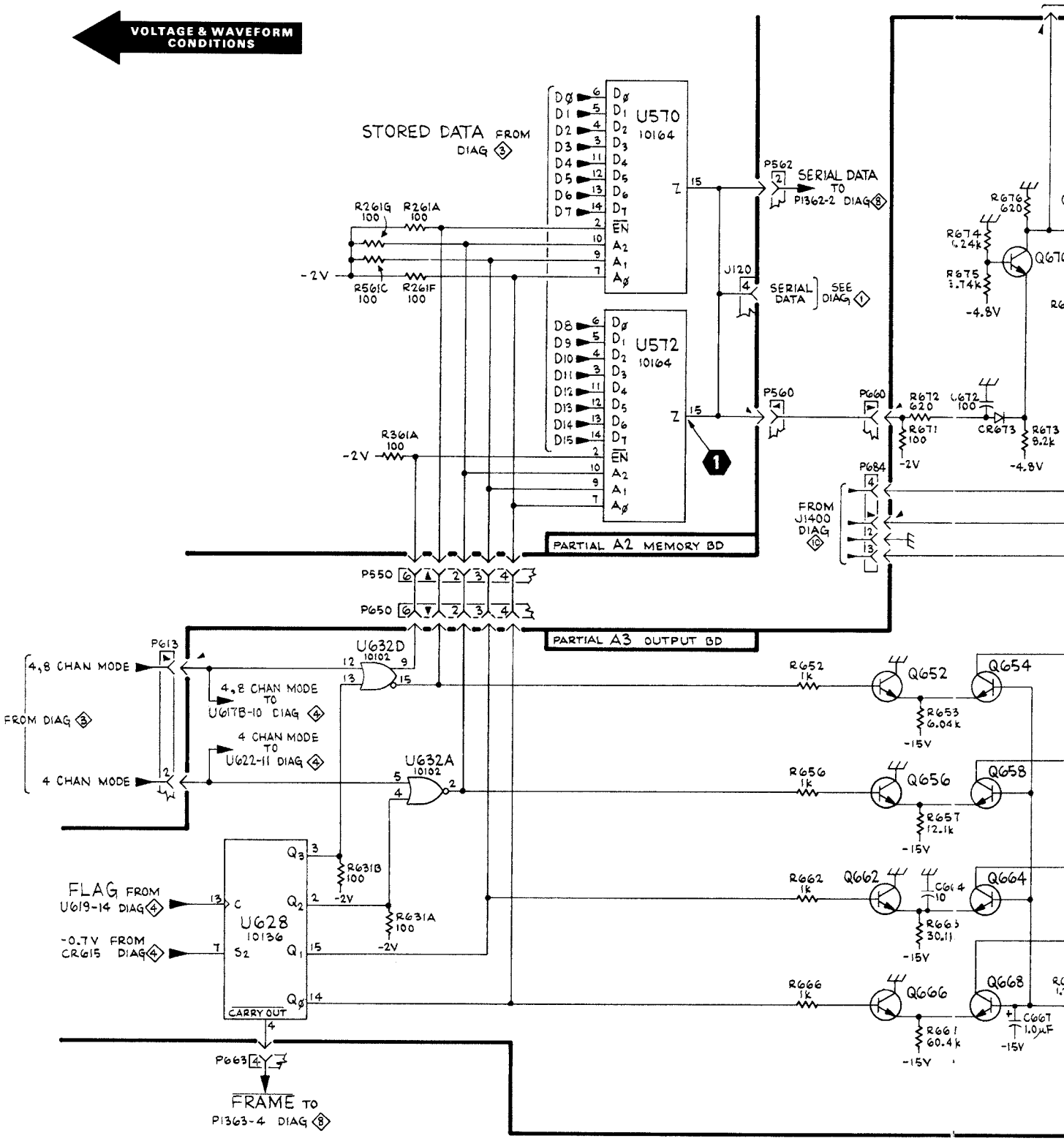
VOLTAGE & WAVEFORM CONDITIONS
STORED DATA FROM DIAG 3
U570 10164
U572 10164
R261G 100
R261A 100
R561C 100
R261F 100
-2V
R361A 100
P562
SERIAL DATA TO P1362-2 DIAG 8
J120
SERIAL DATA SEE DIAG 1
P560
P660
R672 620
U672 100
CR673
R673 8.2k
R671 100
-4.8V
P684
FROM J1400 DIAG 10
PARTIAL A2 MEMORY BD
P550
P650
PARTIAL A3 OUTPUT BD
P613
4,8 CHAN MODE
4 CHAN MODE
FROM DIAG 3
4,8 CHAN MODE TO U617B-10 DIAG 4
4 CHAN MODE TO U622-11 DIAG 4
U632D 10102
U632A 10102
R631B 100
R631A 100
FLAG FROM U619-14 DIAG 4
-0.7V FROM CR615 DIAG 4
U628 10136
CARRY OUT
P663
FRAME TO P1363-4 DIAG 8
R652 1k
Q652
Q654
R653 6.04k
-15V
R656 1k
Q656
Q658
R657 12.1k
R662 1k
Q662
C664 10
Q664
R663 30.1k
R666 1k
Q666
Q668
R661 60.4k
C667 1.0µF

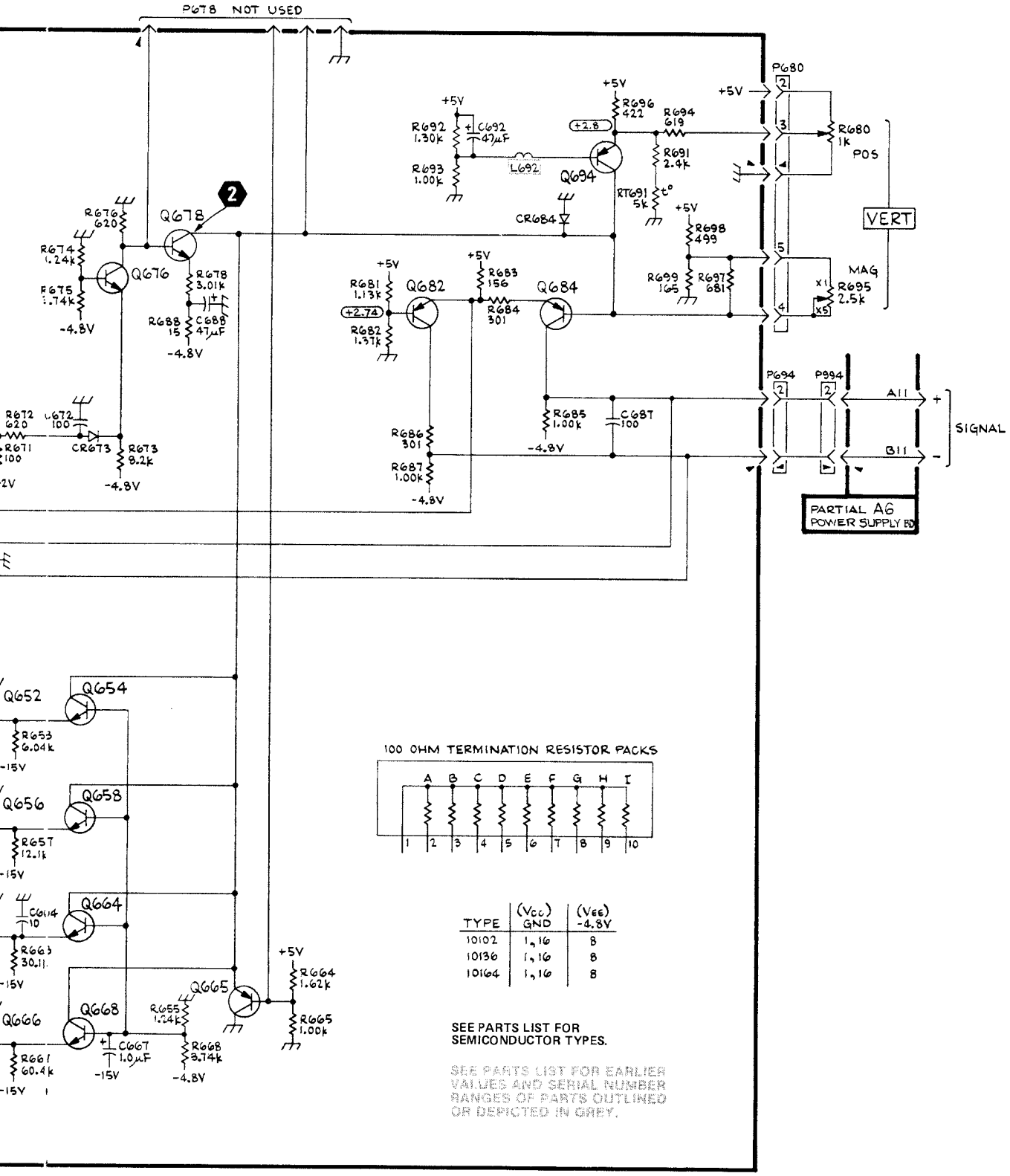

TYPE	(Vcc) GND	(VEE) -4.8V
10102	1, 16	8
10136	1, 16	8
10164	1, 16	8

SEE PARTS LIST FOR SEMICONDUCTOR TYPES.

SEE PARTS LIST FOR EARLIER VALUES AND SERIAL NUMBER RANGES OF PARTS OUTLINED OR DEPICTED IN GREY.

VERT OUT

(SN B020000 & UP)
VERTICAL OUTPUT

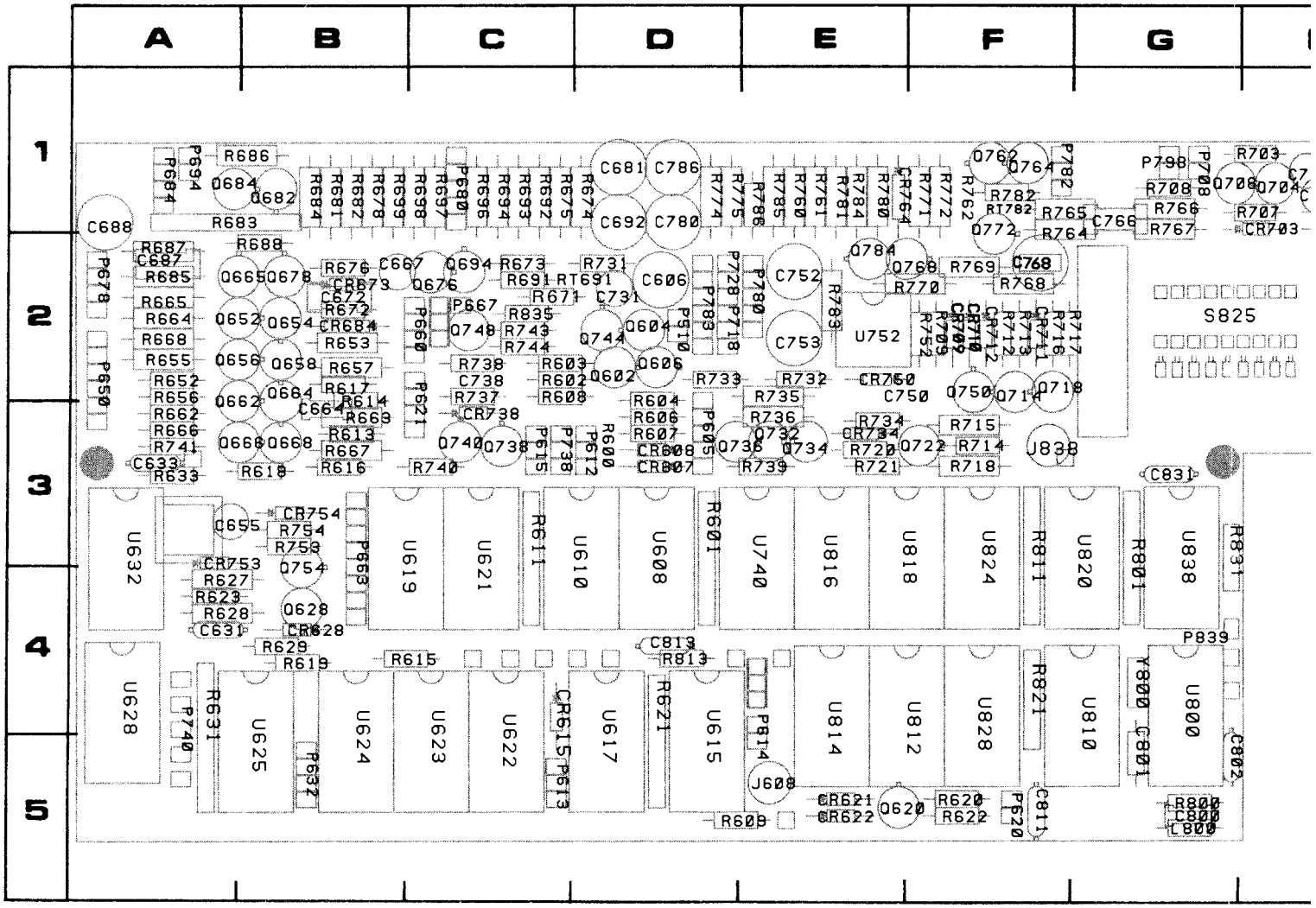

COMPONENT LOCATIONS AS VIEWED WITH BOARD INSTALLED. FOR VIEW OF COMPONENT SIDE OF BOARD, SEE FIGURE 8-5 IN THIS SECTION

Figure 8-15. A3—Output circuit board. Component locations as viewed with board installed.

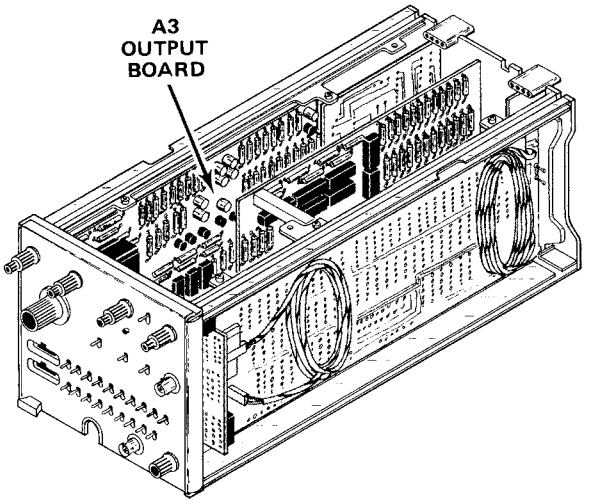

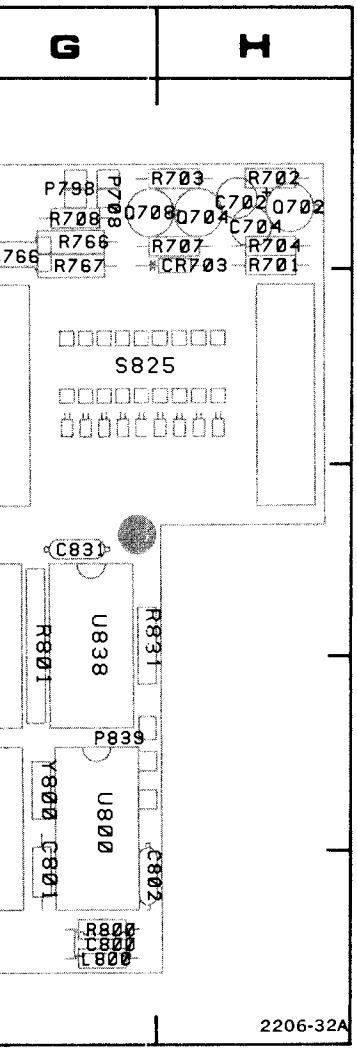

URE 8-5 IN THIS SECTION.

CKT NO	GRID COORD	CKT NO	GRID COORD	CKT NO	GRID COORD	CKT NO	GRID COORD	CKT NO	GRID COORD
C606	2D	P605	3D	Q740	3C	R678	1B	R767	1G
C631	4A	P612	3D	Q744	2D	R681	1B	R768	2F
C633	3A	P613	5C	Q748	2C	R682	1B	R769	2F
C655	3A	P614	4E	Q750	2F	R683	1A	R770	2F
C664	3B	P615	3C	Q754	3B	R684	1B	R771	1F
C667	2B	P620	5F	Q762	1F	R685	2A	R772	1F
C672	2B	P621	2C	Q764	1F	R686	1A	R774	1D
C681	1D	P632	5B	Q768	2F	R687	2A	R775	1D
C687	2A	P650	2A	Q772	1F	R688	2B	R780	1E
C688	1A	P660	2C	Q784	2E	R691	2C	R781	1E
C692	1D	P663	3B			R692	1C	R782	1F
C702	1H	P667	2C	R600	3D	R693	1C	R783	2E
C704	1H	P678	2A	R601	3D	R694	1C	R784	1E
C731	2D	P680	1C	R602	2C	R696	1C	R785	1E
C738	2C	P684	1A	R603	2C	R697	1C	R786	1E
C750	2E	P694	1A	R604	2D	R698	1C	R800	5G
C752	2E	P708	1G	R606	3D	R699	1B	R801	3G
C753	2E	P718	2D	R607	3D	R701	1H	R811	3F
C766	1G	P738	3C	R608	2C	R702	1H	R813	4D
C768	2F	P740	4A	R609	5D	R703	1H	R821	4F
C780	1D	P780	2E	R611	3C	R704	1H	R831	3G
C786	1D	P782	1F	R613	3B	R707	1H	R835	2C
C800	5G	P783	2D	R614	2B	R708	1G		
C801	5G	P798	1G	R615	4B	R709	2F	RT691	2C
C802	5G	P839	4G	R616	3B	R712	2F	RT782	1F
C811	5F			R617	2B	R713	2F		
C813	4D	Q602	2D	R618	3B	R714	3F	S825	2G
C831	3G	Q604	2D	R619	4B	R715	3F		
CR607	3D	Q606	2D	R620	5F	R716	2F	U608	3D
CR608	3D	Q620	5E	R621	4D	R717	2F	U610	3D
CR615	4C	Q628	4B	R622	5F	R718	3F	U615	5D
CR621	5E	Q652	2A	R623	4A	R720	3E	U617	5D
CR622	5E	Q654	2B	R627	4A	R721	3E	U619	3C
CR628	4B	Q656	2A	R628	4A	R731	2D	U621	3C
CR673	2B	Q658	2B	R629	4B	R732	2E	U622	5C
CR684	2B	Q662	2A	R631	4A	R733	2D	U623	5C
CR703	1H	Q664	2B	R633	3A	R734	3E	U624	5B
CR709	2F	Q665	2A	R652	2A	R735	2E	U625	5B
CR710	2F	Q666	3A	R653	2B	R736	3E	U628	4A
CR711	2F	Q668	3B	R655	2A	R737	2C	U632	3A
CR712	2F	Q676	2C	R656	2A	R738	2C	U740	3E
CR717	2F	Q678	2B	R657	2B	R739	3E	U752	2E
CR734	3E	Q682	1B	R662	3A	R740	3C	U800	4G
CR738	3C	Q684	1A	R663	3B	R741	3A	U810	4G
CR750	2E	Q694	2C	R664	2A	R743	2C	U812	4F
CR753	3A	Q702	1H	R665	2A	R744	2C	U814	4E
CR754	3B	Q704	1H	R666	3A	R752	2F	U816	3E
CR764	1E	Q708	1G	R667	3B	R753	3B	U818	3F
		Q714	2F	R668	2A	R754	3B	U820	3G
J608	5E	Q718	2F	R671	2C	R760	1E	U824	3F
J838	3F	Q722	3F	R672	2B	R761	1E	U828	4F
		Q732	3E	R673	2C	R762	1F	U838	3G
L800	5G	Q734	3E	R674	1D	R764	1F		
		Q736	3D	R675	1C	R765	1F	Y800	4G
P510	2D	Q738	3C	R676	2B	R766	1G		

VOLTAGE AND WAVEFORM CONDITIONS

Voltages and Waveforms shown are typical, but may vary between instruments.

TEST SETUP: The 7D01 is connected to the 7000-series mainframe through two 067-0616-00 Flexible Plug-in Extenders. The 7D01 controls are set as follows:

DISPLAY TIME. . . . . .∞
DATA CHANNELS. 0-7

The 7D01 is triggered (press MANUAL TRIGGER pushbutton).

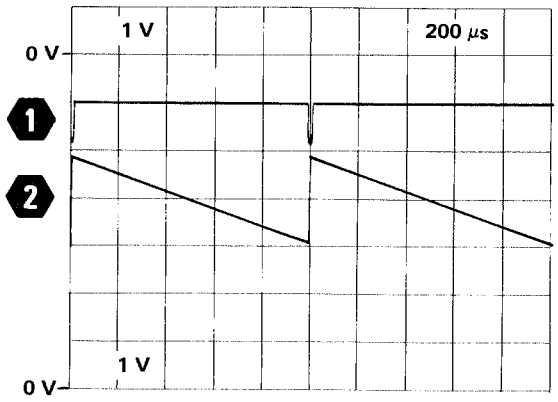

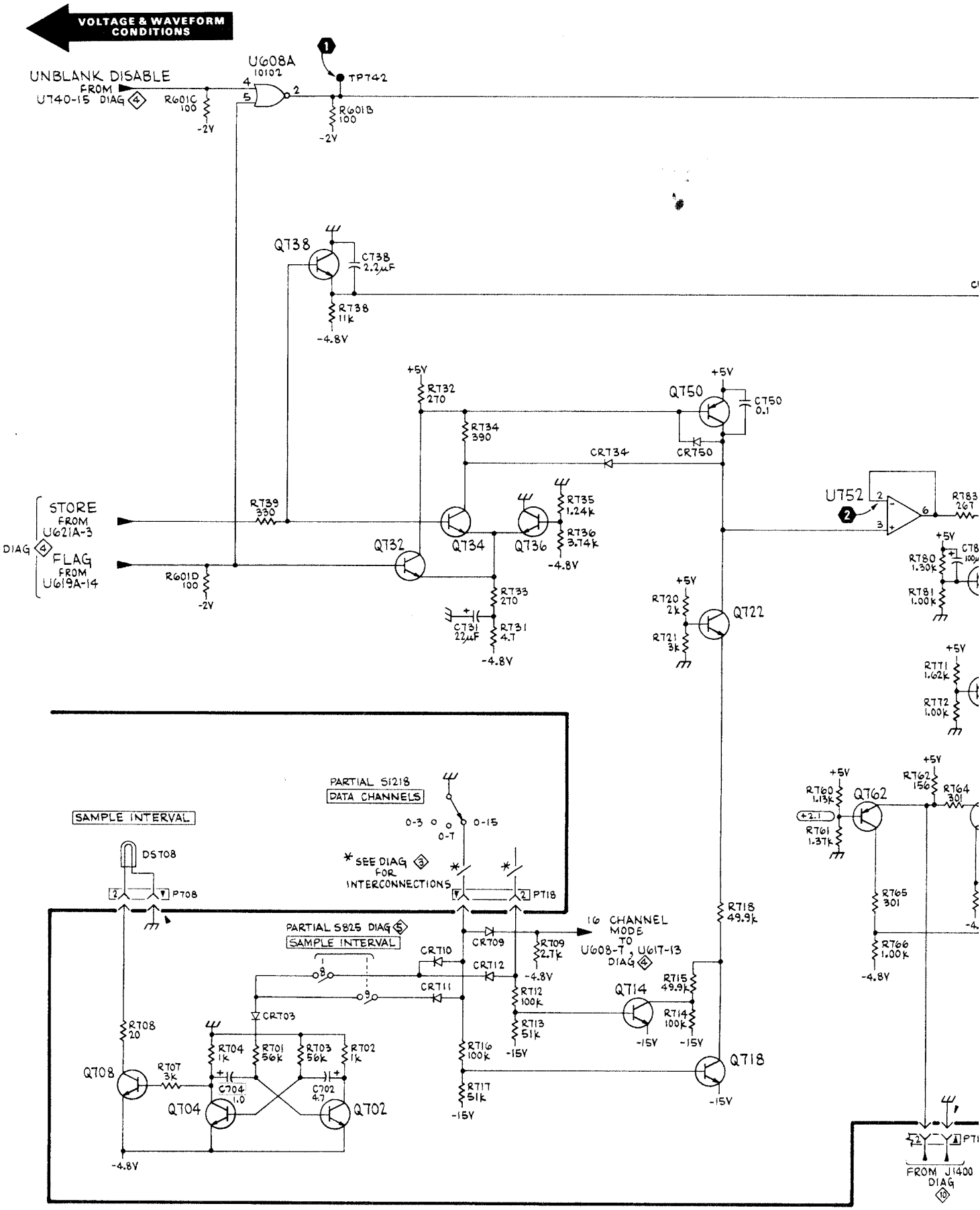
VOLTAGE & WAVEFORM CONDITIONS
UNBLANK DISABLE FROM U740-15 DIAG 4
U608A 10102
TP742
R601C 100
-2V
R601B 100
-2V
Q738
C738 2.2µF
R738 11k
-4.8V
+5V
R732 270
R734 390
Q750
C750 0.1
CR750
CR734
STORE FROM U621A-3
DIAG 4
FLAG FROM U619A-14
R739 330
Q732
Q734
Q736
R735 1.24k
R736 3.74k
-4.8V
R601D 100
-2V
R733 270
C731 22µF
R731 4.7
-4.8V
U752
R783 267
R780 1.30k
R781 1.00k
R720 2k
R721 3k
Q722
R771 1.62k
R772 1.00k
PARTIAL S1218 DATA CHANNELS
0-3
0-7
0-15
SAMPLE INTERVAL
DS708
P708
* SEE DIAG 3 FOR INTERCONNECTIONS
PT18
PARTIAL S825 DIAG 5
SAMPLE INTERVAL
CR709
R709 2.7k
16 CHANNEL MODE TO U608-7, U617-13 DIAG 4
CR710
CR712
CR711
R712 100k
R713 51k
-15V
R715 49.9k
Q714
R714 100k
R718 49.9k
Q718
R716 100k
R717 51k
CR703
R708 20
Q708
R707 3k
R704 1k
R701 56k
R703 56k
R702 1k
C704 1.0
C702 4.7
Q704
Q702
R760 1.13k
R761 1.37k
Q762
R762 156
R764 301
R765 301
R766 1.00k
FROM J1400 DIAG 10

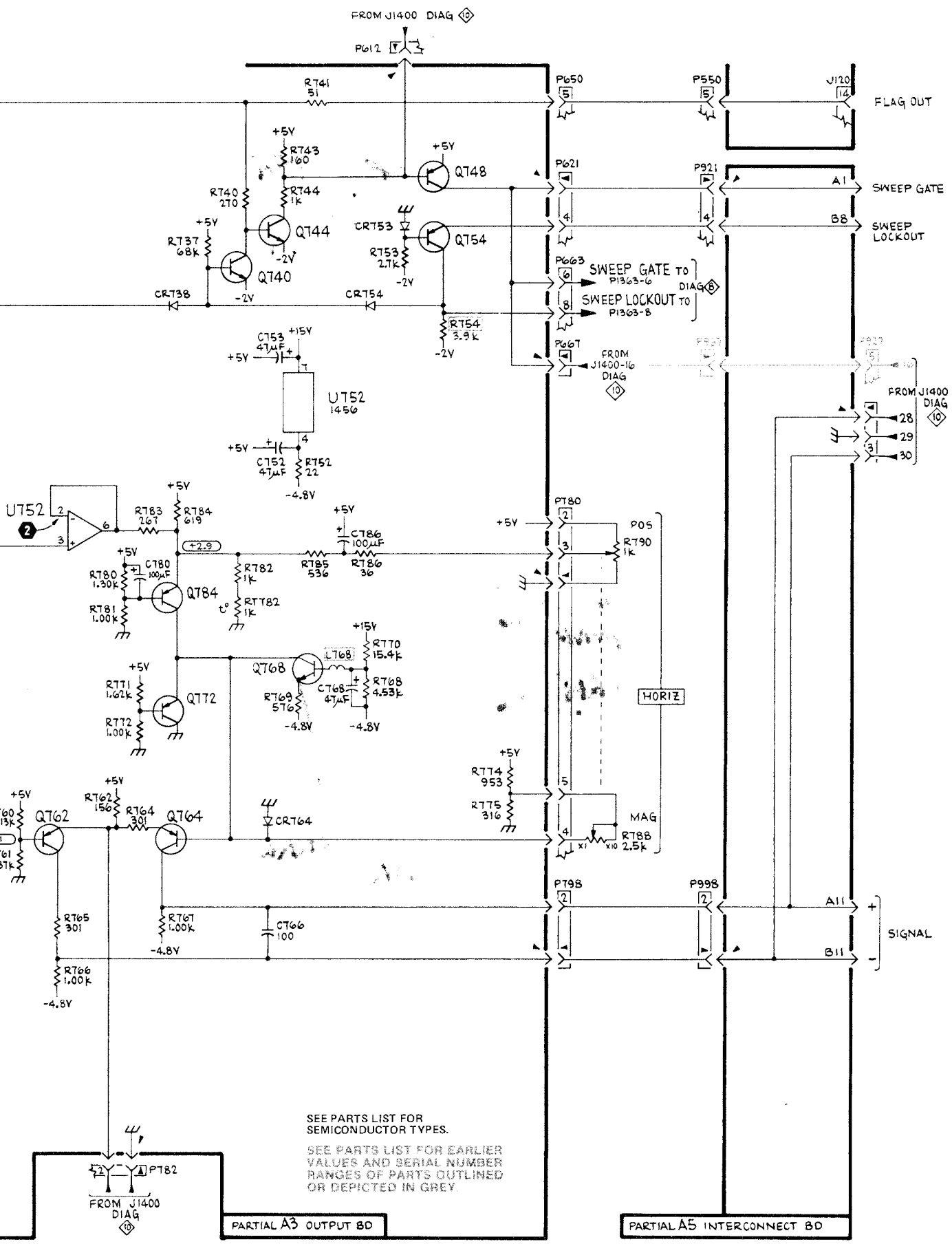

(SN B020000 & UP)

HORIZONTAL OUTPUT 7

7D01 (SN B020000 & up)

Figure 8-16. A4—Cursor circuit board component locations.

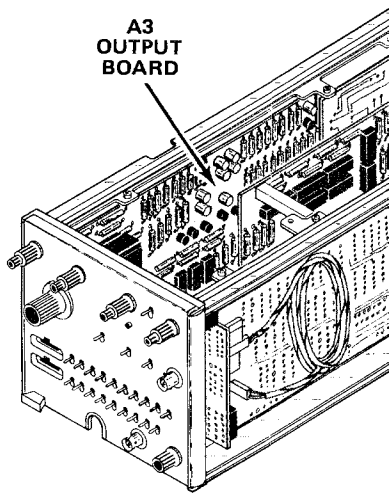

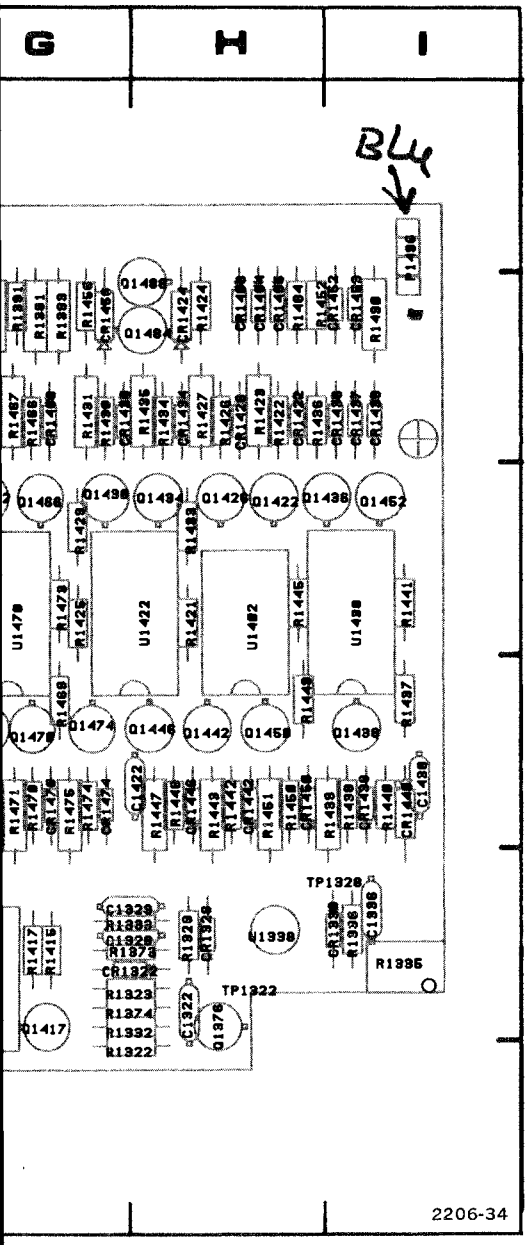

CKT NO	GRID COORD	CKT NO	GRID COORD	CKT NO	GRID COORD	CKT NO	GRID COORD	CKT NO	GRID COORD	CKT NO	G C
C1300	3E	CR1462	2G	Q1438	4I	R1354	2A	R1430	2G	R1483	4
C1304	5E	CR1466	2G	Q1442	4H	R1361	1C	R1431	2G	R1484	2
C1322	5H	CR1470	4G	Q1446	4H	R1363	2C	R1433	3H	R1487	2
C1328	5G	CR1474	4G	Q1450	4H	R1364	2C	R1434	2H	R1488	4
C1329	5G	CR1478	4F	Q1452	3I	R1370	2D	R1435	2H	R1490	2
C1336	5I	CR1482	4G	Q1454	3F	R1371	3E	R1436	2H	R1491	2
C1342	4A	CR1484	2H	Q1458	3F	R1372	3E	R1437	4I	R1493	2
C1343	3A	CR1485	2H	Q1462	3G	R1373	5G	R1438	4I	R1494	4
C1344	3A	CR1486	2H	Q1466	3G	R1374	5G	R1439	4I	R1495	3
C1348	5E	CR1487	4F	Q1470	4G	R1375	5D	R1440	4I	R1496	2
C1352	2A	CR1488	4F	Q1474	4G	R1376	5D	R1441	3I	R1497	1
C1353	2A	P1342	2A	Q1478	4F	R1381	2G	R1442	4H	R1498	1
C1354	2A	P1314	4D	Q1482	4G	R1382	2G	R1443	4H	R1499	2
C1364	2C	P1352	2A	Q1484	2H	R1383	2F	R1445	3H		
C1366	3C	P1357	1B	Q1486	1C	R1384	2F	R1446	4H	TP1322	5
C1410	1C	P1362	4D	Q1488	2H	R1385	4F	R1447	4H	TP1328	5
C1422	4H	P1363	5D	Q1497	1E	R1386	4F	R1449	4H	TP1334	4
C1438	4I	P1367	2B	Q1499	1D	R1392	2F	R1450	4H		
CR1316	1C	P1383	4E			R1393	2G	R1451	4H	U1322	5
CR1322	5G	P1413	4D	R1301	4E	R1394	2F	R1452	2H	U1328	5
CR1328	5H	P1423	5F	R1302	4E	R1395	2F	R1453	3F	U1332	5
CR1336	5I	P1492	2F	R1303	5E	R1396	2G	R1454	2F	U1334	5
CR1370	4E	P1493	2F	R1304	5E	R1397	2G	R1455	2F	U1338	5
CR1414	3C	P1942	3A	R1306	4E	R1403	3D	R1456	2G	U1342	3
CR1416	4C			R1307	4E	R1404	4C	R1457	3F	U1344	3
CR1418	4B	Q1302	4D	R1308	4E	R1405	4D	R1458	2F	U1346	3
CR1422	2H	Q1304	5D	R1311	5E	R1406	4D	R1459	2F	U1348	3
CR1424	2H	Q1308	4D	R1312	5E	R1411	4E	R1461	3F	U1352	2
CR1426	2H	Q1312	5D	R1315	4E	R1412	5E	R1462	2G	U1356	2
CR1430	2G	Q1316	4D	R1316	4E	R1413	4E	R1463	2G	U1358	2
CR1434	2H	Q1372	4D	R1322	6G	R1414	4C	R1465	3F	U1366	3
CR1436	2I	Q1376	5H	R1328	5H	R1415	5G	R1466	2G	U1368	3
CR1437	2I	Q1404	3C	R1332	5G	R1416	3B	R1467	2G	U1370	3
CR1438	4I	Q1406	4C	R1333	5G	R1417	5G	R1469	4G	U1372	3
CR1439	2I	Q1412	5D	R1335	5I	R1418	4B	R1470	4G	U1402	3
CR1440	4I	Q1414	3C	R1336	5I	R1419	3B	R1471	4G	U1408	3
CR1442	4H	Q1416	4B	R1341	3A	R1421	3H	R1473	3G	U1410	2
CR1446	4H	Q1417	5G	R1342	3A	R1422	2H	R1474	4G	U1422	3
CR1450	4H	Q1418	4B	R1343	3A	R1423	2H	R1475	4G	U1438	3
CR1452	2I	Q1422	3H	R1344	3A	R1424	2H	R1477	3G	U1454	3
CR1453	2I	Q1426	3H	R1345	1B	R1425	3G	R1478	4F	U1470	3
CR1454	2F	Q1430	3G	R1351	2A	R1426	2H	R1479	4F	U1492	2
CR1456	2G	Q1434	3H	R1352	2A	R1427	2H	R1481	4G	U1494	3
CR1458	2F	Q1436	3H	R1353	2A	R1429	3G	R1482	4G		

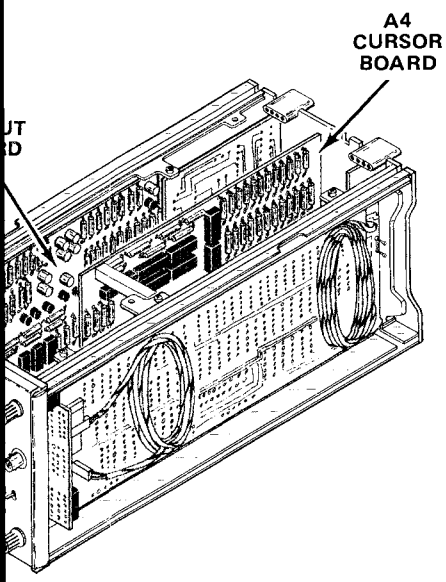

CKT NO	GRID COORD
R1483	4G
R1484	2H
R1487	2C
R1488	4E
R1490	2I
R1491	2E
R1493	2E
R1494	4F
R1495	3E
R1496	2D
R1497	1D
R1498	1D
R1499	2D
TP1322	5H
TP1328	5I
TP1334	4F
U1322	5E
U1328	5G
U1332	5F
U1334	5F
U1338	5H
U1342	3B
U1344	3B
U1346	3B
U1348	3C
U1352	2B
U1356	2B
U1358	2C
U1366	3B
U1368	3C
U1370	3D
U1372	3D
U1402	3H
U1408	3F
U1410	2D
U1422	3H
U1438	3I
U1454	3F
U1470	3G
U1492	2E
U1494	3E

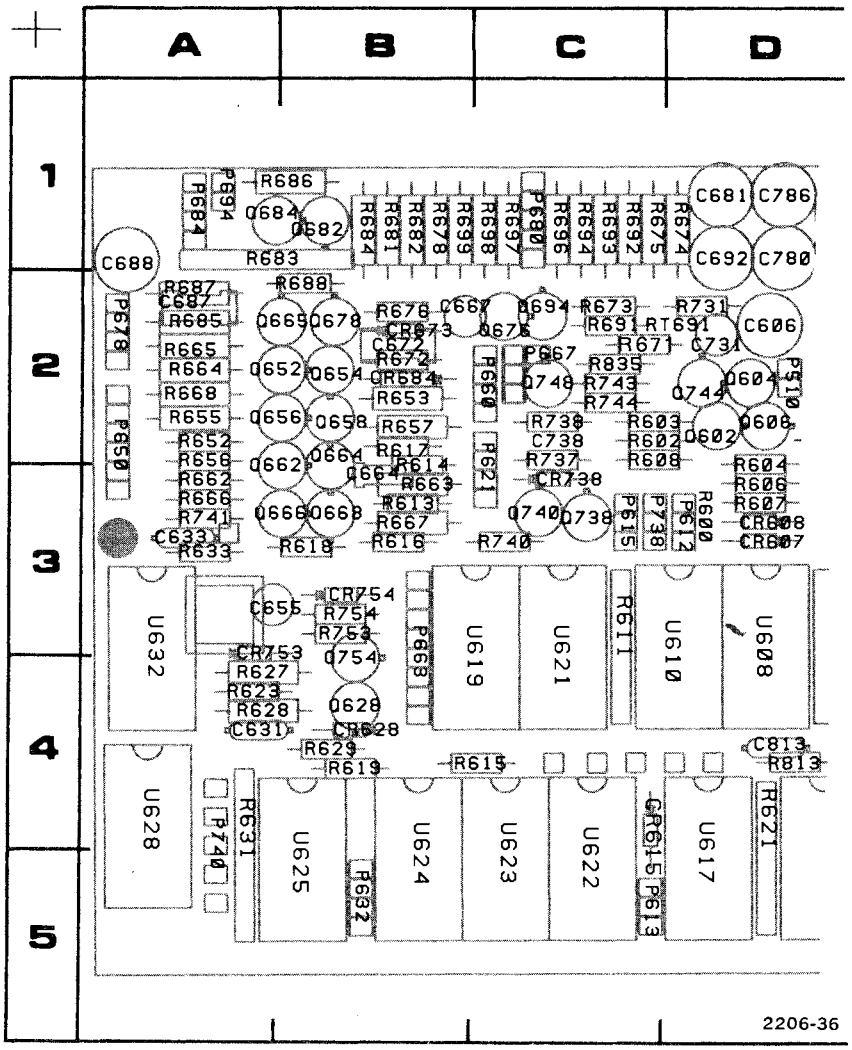

COMPONENT LOCATIONS AS VIEWED WITH BOARD INSTALLED. FOR VIEW OF COMPONENT SIDE OF BOARD, SEE FIGURE 8-5 IN THIS SECTION.

Figure 8-17. Partial A3—Output circuit board. Component locations as viewed with board installed.

CKT NO	GRID COORD	CKT NO	GRID COORD	CKT NO	GRID COORD	CKT NO	GRID COORD	CKT NO	GRID COORD	CKT NO	GRID COORD
C606	2D	P510	2D	Q662	2B	R613	3B	R668	2A	R740	3C
C631	4B	P612	3D	Q664	2B	R614	2B	R671	2C	R741	3A
C633	3A	P613	5C	Q665	2B	R615	4C	R672	2B	R743	2C
C667	2C	P615	3C	Q666	3B	R616	3B	R673	2C	R744	2C
C672	2B	P621	2C	Q668	3B	R617	2B	R676	2B	R754	3B
C681	1D	P632	5B	Q676	2C	R618	3B	R678	1B	R783	2E
C687	2A	P650	2A	Q678	2B	R619	4B	R681	1B	R813	4D
C688	1A	P660	2C	Q682	1B	R621	5D	R682	1B	R835	2C
C692	1D	P663	3B	Q684	1B	R623	4B	R683	1B		
C731	2D	P678	2A	Q694	2C	R627	4B	R684	1B	U608	3D
C738	2C	P680	1C	Q738	3C	R628	4B	R685	2A	U610	3D
C780	1D	P684	1A	Q740	3C	R629	4B	R686	1B	U617	5D
C786	1D	P694	1A	Q744	2D	R631	4A	R687	2A	U619	3C
C813	4D	P738	3D	Q748	2C	R633	3A	R688	2B	U621	3C
		P740	4A	Q754	3B	R652	2A	R692	1C	U662	5C
						R653	2B	R693	1C	U623	5C
CR607	3D	Q602	2D	R600	3D	R656	2A	R694	1C	U624	4B
CR608	3D	Q604	2D	R602	2D	R657	2B	R696	1C	U625	5B
CR615	4C	Q606	2D	R603	2D	R662	3A	R697	1C	U628	4A
CR628	4B	Q628	4B	R604	2D	R663	2B	R698	1C	U632	3A
CR673	2B	Q652	2B	R606	3D	R664	2A	R699	1C		
CR738	3C	Q654	2B	R607	3D	R665	2A	R731	2C		
CR753	3B	Q656	2B	R608	2D	R666	3A	R737	2C		
CR754	3B	Q658	2B	R611	3C	R667	3B	R738	2C		

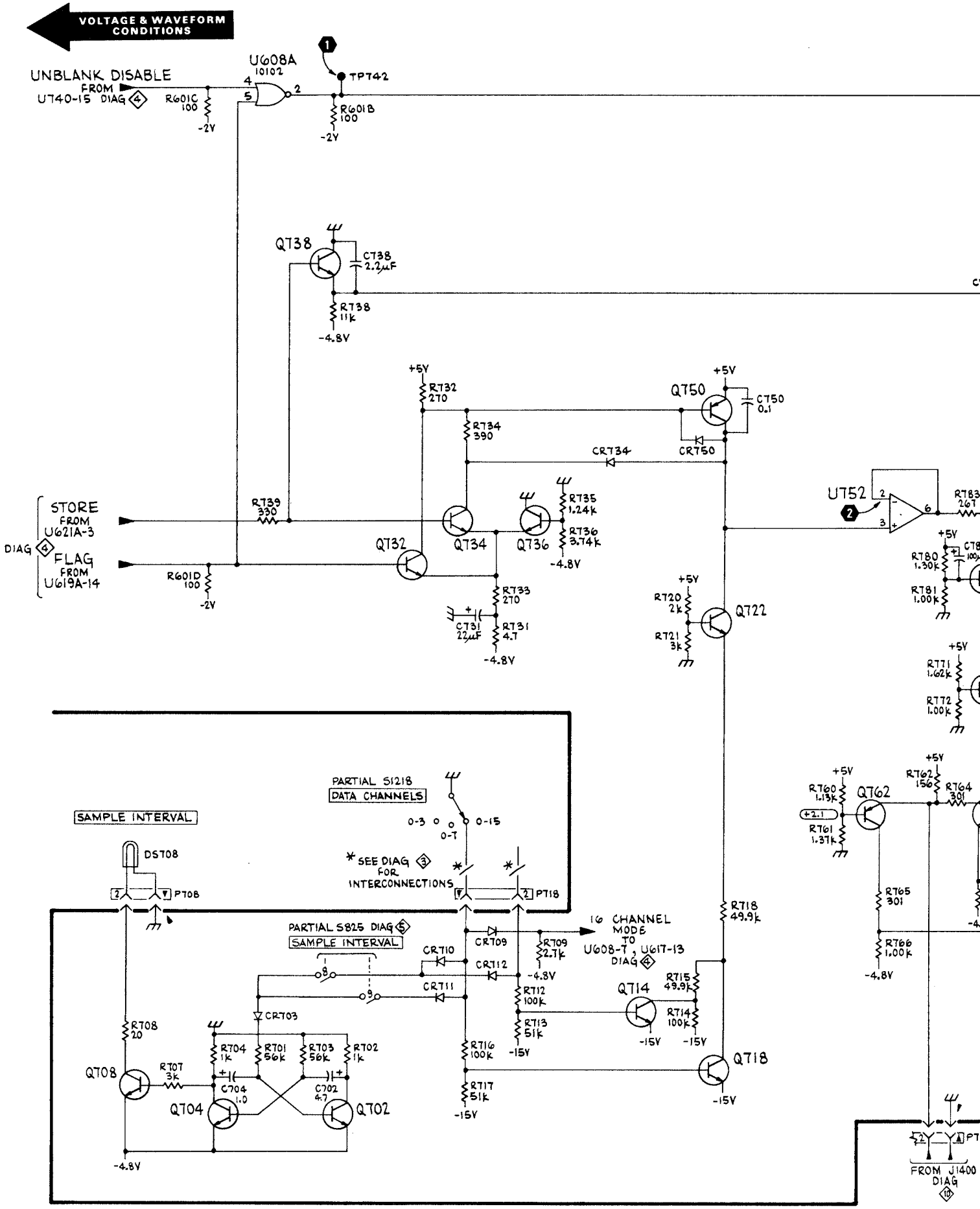
VOLTAGE & WAVEFORM CONDITIONS
UNBLANK DISABLE
FROM U740-15 DIAG 4
U608A
10102
TP742
R601C 100
R601B 100
-2V
Q738
C738 2.2µF
R738 11k
-4.8V
+5V
R732 270
R734 390
Q750
C750 0.1
CR750
CR734
STORE FROM U621A-3
FLAG FROM U619A-14
DIAG 4
R739 330
Q732
Q734
Q736
R735 1.24k
R736 3.74k
R601D 100
R733 270
C731 22µF
R731 4.7
U752
R783 267
R780 1.30k
R781 1.00k
R720 2k
R721 3k
Q722
R771 1.62k
R772 1.00k
PARTIAL 5121B
DATA CHANNELS
0-3
0-7
0-15
SAMPLE INTERVAL
DS708
P708
* SEE DIAG 3 FOR INTERCONNECTIONS
P718
PARTIAL 5825 DIAG 5
SAMPLE INTERVAL
CR710
CR712
CR711
CR709
R709 2.7k
16 CHANNEL MODE TO U608-7, U617-13 DIAG 4
R718 49.9k
R715 49.9k
Q714
R714 100k
R712 100k
R713 51k
-15V
R716 100k
R717 51k
Q718
CR703
R708 20
Q708
R707 3k
R704 1k
R701 56k
R703 56k
R702 1k
C704 1.0
C702 4.7
Q704
Q702
Q762
R760 1.13k
R761 1.37k
R762 156
R764 301
R765 301
R766 1.00k
FROM J1400 DIAG 10

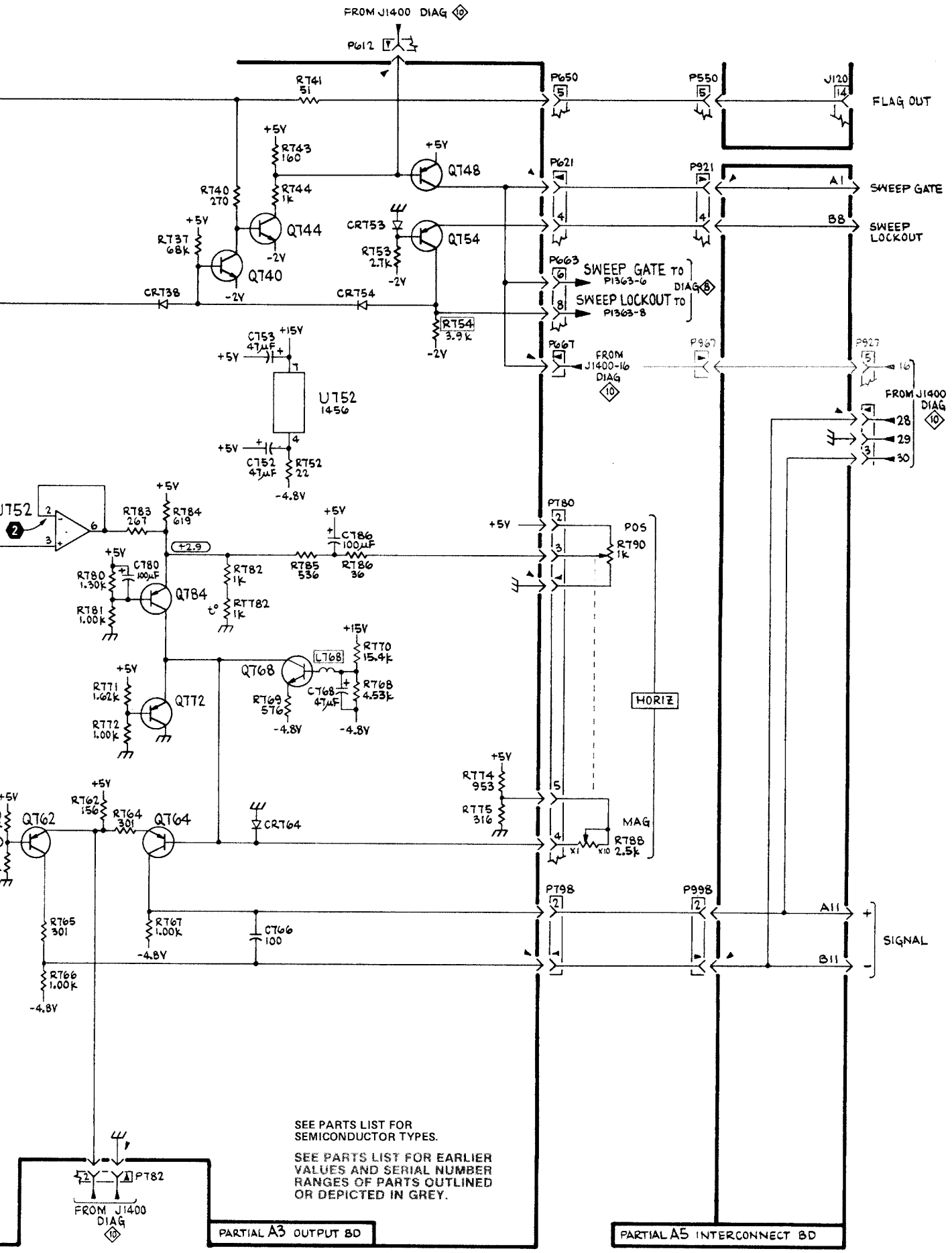

SEE PARTS LIST FOR SEMICONDUCTOR TYPES.

SEE PARTS LIST FOR EARLIER VALUES AND SERIAL NUMBER RANGES OF PARTS OUTLINED OR DEPICTED IN GREY.

(SN B020000 & UP)

HORIZONTAL OUTPUT 7

7D01 (SN B020000 & up)

Figure 8-16. A4—Cursor circuit board component locations.

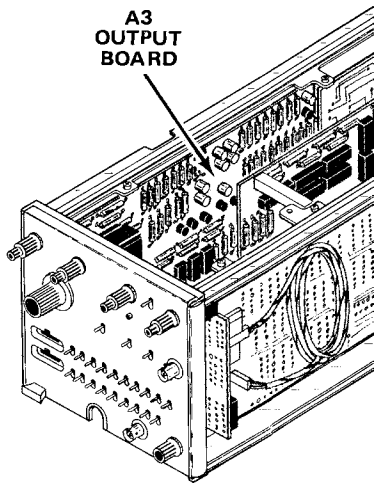

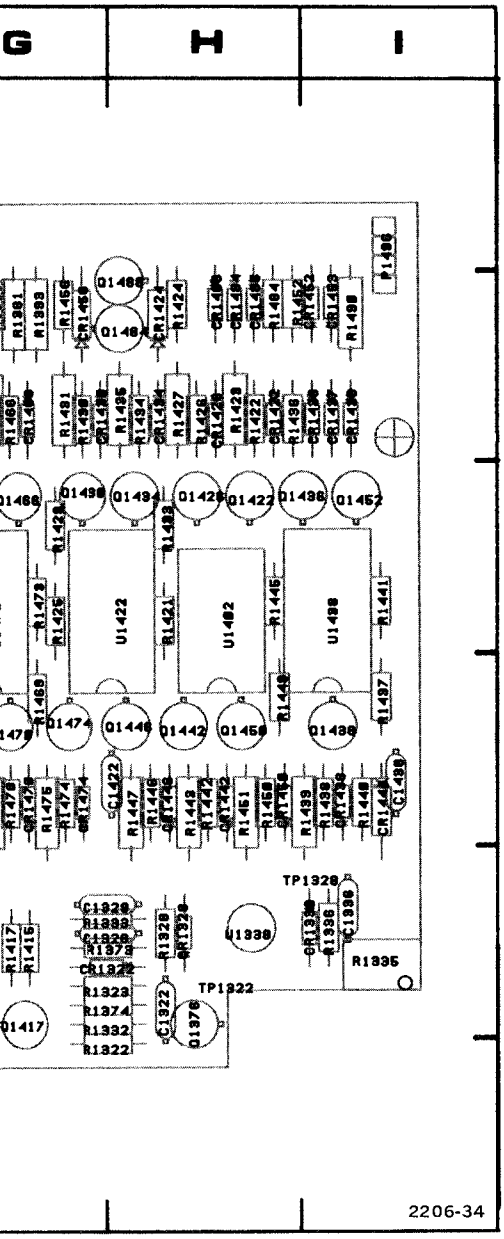

CKT NO	GRID COORD	CKT NO	GRID COORD	CKT NO	GRID COORD	CKT NO	GRID COORD	CKT NO	GRID COORD	CKT NO	GRI COO
C1300	3E	CR1462	2G	Q1438	4I	R1354	2A	R1430	2G	R1483	4G
C1304	5E	CR1466	2G	Q1442	4H	R1361	1C	R1431	2G	R1484	2H
C1322	5H	CR1470	4G	Q1446	4H	R1363	2C	R1433	3H	R1487	2C
C1328	5G	CR1474	4G	Q1450	4H	R1364	2C	R1434	2H	R1488	4E
C1329	5G	CR1478	4F	Q1452	3I	R1370	2D	R1435	2H	R1490	2I
C1336	5I	CR1482	4G	Q1454	3F	R1371	3E	R1436	2H	R1491	2E
C1342	4A	CR1484	2H	Q1458	3F	R1372	3E	R1437	4I	R1493	2E
C1343	3A	CR1485	2H	Q1462	3G	R1373	5G	R1438	4I	R1494	4F
C1344	3A	CR1486	2H	Q1466	3G	R1374	5G	R1439	4I	R1495	3E
C1348	5E	CR1487	4F	Q1470	4G	R1375	5D	R1440	4I	R1496	2D
C1352	2A	CR1488	4F	Q1474	4G	R1376	5D	R1441	3I	R1497	1D
C1353	2A			Q1478	4F	R1381	2G	R1442	4H	R1498	1D
C1354	2A	P1314	4D	Q1482	4G	R1382	2G	R1443	4H	R1499	2D
C1364	2C	P1352	2A	Q1484	2H	R1383	2F	R1445	3H		
C1366	3C	P1357	1B	Q1486	1C	R1384	2F	R1446	4H	TP1322	5H
C1410	1C	P1362	4D	Q1488	2H	R1385	4F	R1447	4H	TP1328	5I
C1422	4H	P1363	5D	Q1497	1E	R1386	4F	R1449	4H	TP1334	4F
C1438	4I	P1367	2B	Q1499	1D	R1392	2F	R1450	4H		
CR1316	1C	P1383	4E			R1393	2G	R1451	4H	U1322	5E
CR1322	5G	P1413	4D	R1301	4E	R1394	2F	R1452	2H	U1328	5G
CR1328	5H	P1423	5F	R1302	4E	R1395	2F	R1453	3F	U1332	5F
CR1336	5I	P1492	2F	R1303	5E	R1396	2G	R1454	2F	U1334	5F
CR1370	4E	P1493	2F	R1304	5E	R1397	2G	R1455	2F	U1338	5H
CR1414	3C	P1942	3A	R1306	4E	R1403	3D	R1456	2G	U1342	3B
CR1416	4C			R1307	4E	R1404	4C	R1457	3F	U1344	3B
CR1418	4B	Q1302	4D	R1308	4E	R1405	4D	R1458	2F	U1346	3B
CR1422	2H	Q1304	5D	R1311	5E	R1406	4D	R1459	2F	U1348	3C
CR1424	2H	Q1308	4D	R1312	5E	R1411	4E	R1461	3F	U1352	2B
CR1426	2H	Q1312	5D	R1315	4E	R1412	5E	R1462	2G	U1356	2B
CR1430	2G	Q1316	4D	R1316	4E	R1413	4E	R1463	2G	U1358	2C
CR1434	2H	Q1372	4D	R1322	6G	R1414	4C	R1465	3F	U1366	3B
CR1436	2I	Q1376	5H	R1328	5H	R1415	5G	R1466	2G	U1368	3C
CR1437	2I	Q1404	3C	R1332	5G	R1416	3B	R1467	2G	U1370	3D
CR1438	4I	Q1406	4C	R1333	5G	R1417	5G	R1469	4G	U1372	3D
CR1439	2I	Q1412	5D	R1335	5I	R1418	4B	R1470	4G	U1402	3H
CR1440	4I	Q1414	3C	R1336	5I	R1419	3B	R1471	4G	U1408	3F
CR1442	4H	Q1416	4B	R1341	3A	R1421	3H	R1473	3G	U1410	2D
CR1446	4H	Q1417	5G	R1342	3A	R1422	2H	R1474	4G	U1422	3H
CR1450	4H	Q1418	4B	R1343	3A	R1423	2H	R1475	4G	U1438	3I
CR1452	2I	Q1422	3H	R1344	3A	R1424	2H	R1477	3G	U1454	3F
CR1453	2I	Q1426	3H	R1345	1B	R1425	3G	R1478	4F	U1470	3G
CR1454	2F	Q1430	3G	R1351	2A	R1426	2H	R1479	4F	U1492	2E
CR1456	2G	Q1434	3H	R1352	2A	R1427	2H	R1481	4G	U1494	3E
CR1458	2F	Q1436	3H	R1353	2A	R1429	3G	R1482	4G		

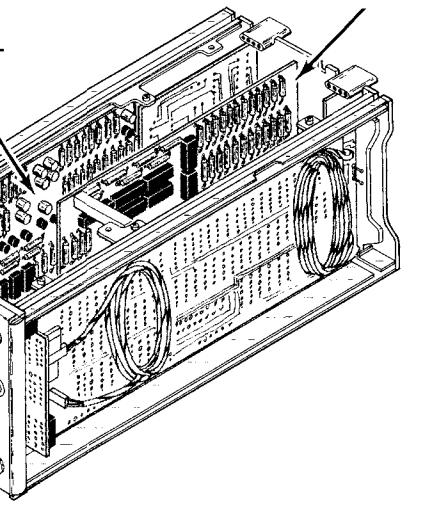

CKT NO	GRID COORD
R1483	4G
R1484	2H
R1487	2C
R1488	4E
R1490	2I
R1491	2E
R1493	2E
R1494	4F
R1495	3E
R1496	2D
R1497	1D
R1498	1D
R1499	2D
TP1322	5H
TP1328	5I
TP1334	4F
U1322	5E
U1328	5G
U1332	5F
U1334	5F
U1338	5H
U1342	3B
U1344	3B
U1346	3B
U1348	3C
U1352	2B
U1356	2B
U1358	2C
U1366	3B
U1368	3C
U1370	3D
U1372	3D
U1402	3H
U1408	3F
U1410	2D
U1422	3H
U1438	3I
U1454	3F
U1470	3G
U1492	2E
U1494	3E

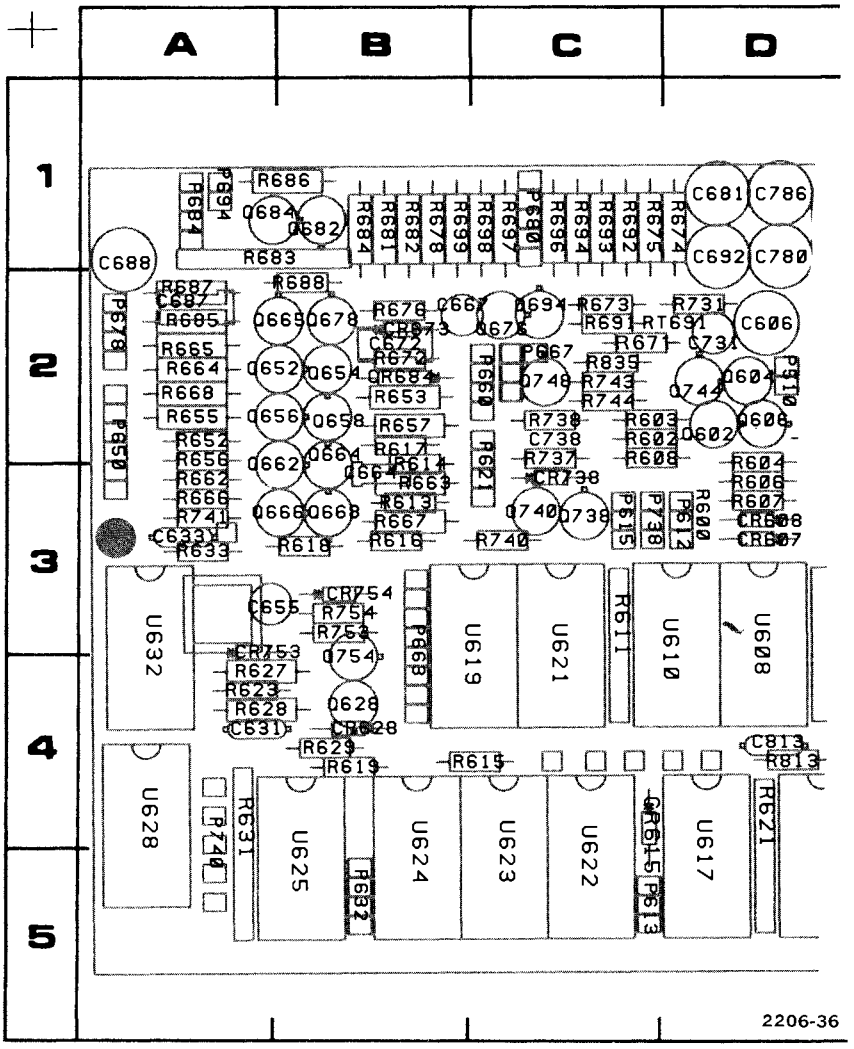

COMPONENT LOCATIONS AS VIEWED WITH BOARD INSTALLED. FOR VIEW OF COMPONENT SIDE OF BOARD, SEE FIGURE 8-5 IN THIS SECTION.

Figure 8-17. Partial A3—Output circuit board. Component locations as viewed with board installed.

CKT NO	GRID COORD	CKT NO	GRID COORD	CKT NO	GRID COORD	CKT NO	GRID COORD	CKT NO	GRID COORD	CKT NO	GRID COORD
C606	2D	P510	2D	Q662	2B	R613	3B	R668	2A	R740	3C
C631	4B	P612	3D	Q664	2B	R614	2B	R671	2C	R741	3A
C633	3A	P613	5C	Q665	2B	R615	4C	R672	2B	R743	2C
C667	2C	P615	3C	Q666	3B	R616	3B	R673	2C	R744	2C
C672	2B	P621	2C	Q668	3B	R617	2B	R676	2B	R754	3B
C681	1D	P632	5B	Q676	2C	R618	3B	R678	1B	R783	2E
C687	2A	P650	2A	Q678	2B	R619	4B	R681	1B	R813	4D
C688	1A	P660	2C	Q682	1B	R621	5D	R682	1B	R835	2C
C692	1D	P663	3B	Q684	1B	R623	4B	R683	1B		
C731	2D	P678	2A	Q694	2C	R627	4B	R684	1B	U608	3D
C738	2C	P680	1C	Q738	3C	R628	4B	R685	2A	U610	3D
C780	1D	P684	1A	Q740	3C	R629	4B	R686	1B	U617	5D
C786	1D	P694	1A	Q744	2D	R631	4A	R687	2A	U619	3C
C813	4D	P738	3D	Q748	2C	R633	3A	R688	2B	U621	3C
		P740	4A	Q754	3B	R652	2A	R692	1C	U662	5C
						R653	2B	R693	1C	U623	5C
CR607	3D	Q602	2D	R600	3D	R656	2A	R694	1C	U624	4B
CR608	3D	Q604	2D	R602	2D	R657	2B	R696	1C	U625	5B
CR615	4C	Q606	2D	R603	2D	R662	3A	R697	1C	U628	4A
CR628	4B	Q628	4B	R604	2D	R663	2B	R698	1C	U632	3A
CR673	2B	Q652	2B	R606	3D	R664	2A	R699	1C		
CR738	3C	Q654	2B	R607	3D	R665	2A	R731	2C		
CR753	3B	Q656	2B	R608	2D	R666	3A	R737	2C		
CR754	3B	Q658	2B	R611	3C	R667	3B	R738	2C		

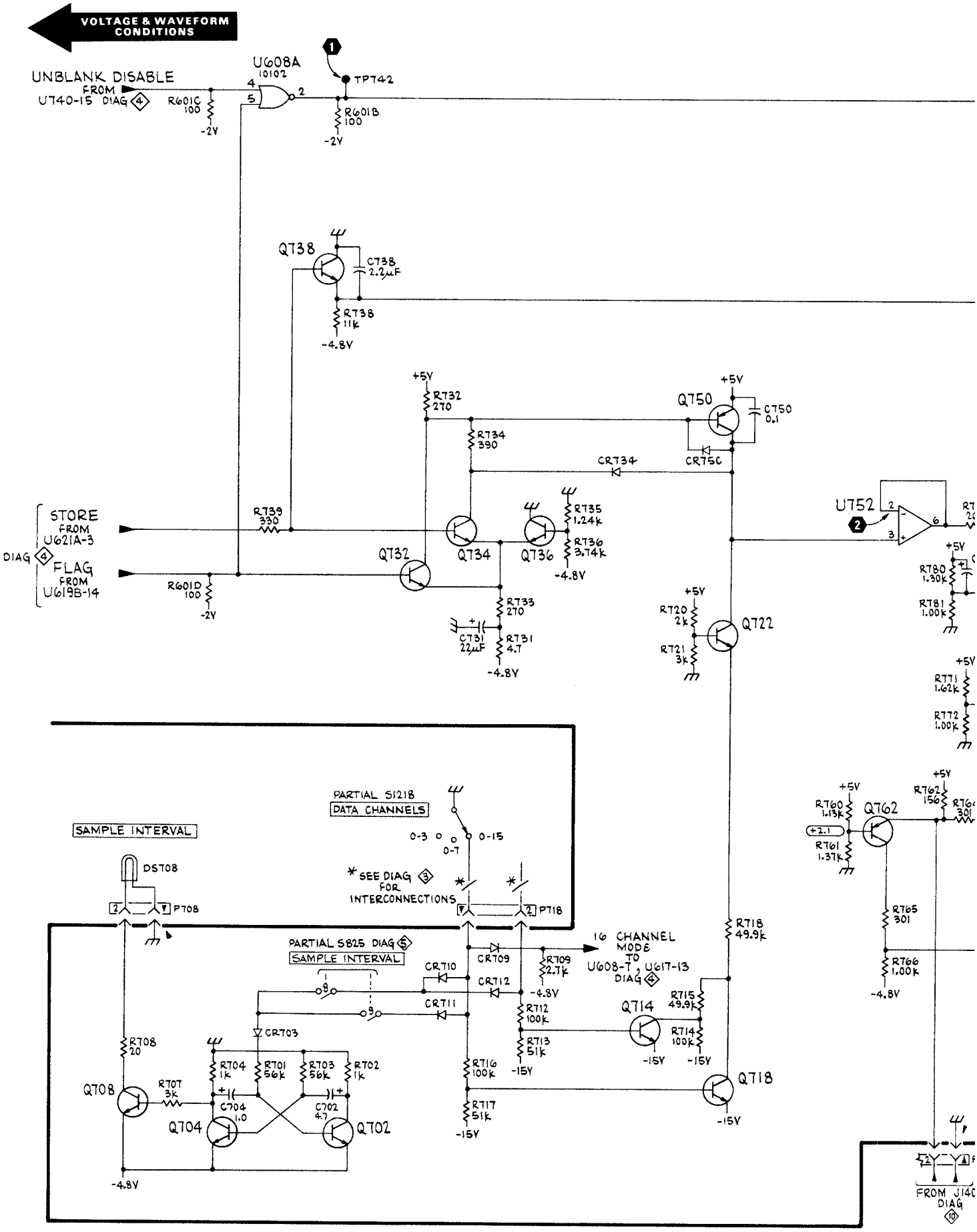
VOLTAGE & WAVEFORM CONDITIONS
UNBLANK DISABLE FROM U740-15 DIAG 4
U608A 10102
TP742
R601C 100
R601B 100
-2V
Q738
C738 2.2µF
R738 11k
-4.8V
+5V
R732 270
R734 390
Q750
C750 0.1
CR750
CR734
STORE FROM U621A-3
DIAG 4
FLAG FROM U619B-14
R739 330
Q732
Q734
Q736
R735 1.24k
R736 3.74k
R601D 100
R733 270
C731 22µF
R731 4.7
U752
R780 1.30k
R781 1.00k
R720 2k
R721 3k
Q722
R771 1.62k
R772 1.00k
PARTIAL S1218 DATA CHANNELS
0-3
0-7
0-15
SAMPLE INTERVAL
DS708
P708
* SEE DIAG 3 FOR INTERCONNECTIONS
P718
PARTIAL S825 DIAG 5
SAMPLE INTERVAL
16 CHANNEL MODE TO U608-T, U617-13 DIAG 4
CR710
CR709
CR712
CR711
R709 2.7k
R712 100k
R713 51k
R715 49.9k
R714 100k
Q714
R718 49.9k
Q718
R716 100k
R717 51k
CR703
R708 20
Q708
R707 3k
R704 1k
R701 56k
R703 56k
R702 1k
C704 1.0
C702 4.7
Q704
Q702
Q762
R760 1.13k
R761 1.37k
R762 156
R765 301
R766 1.00k
FROM J140 DIAG 10

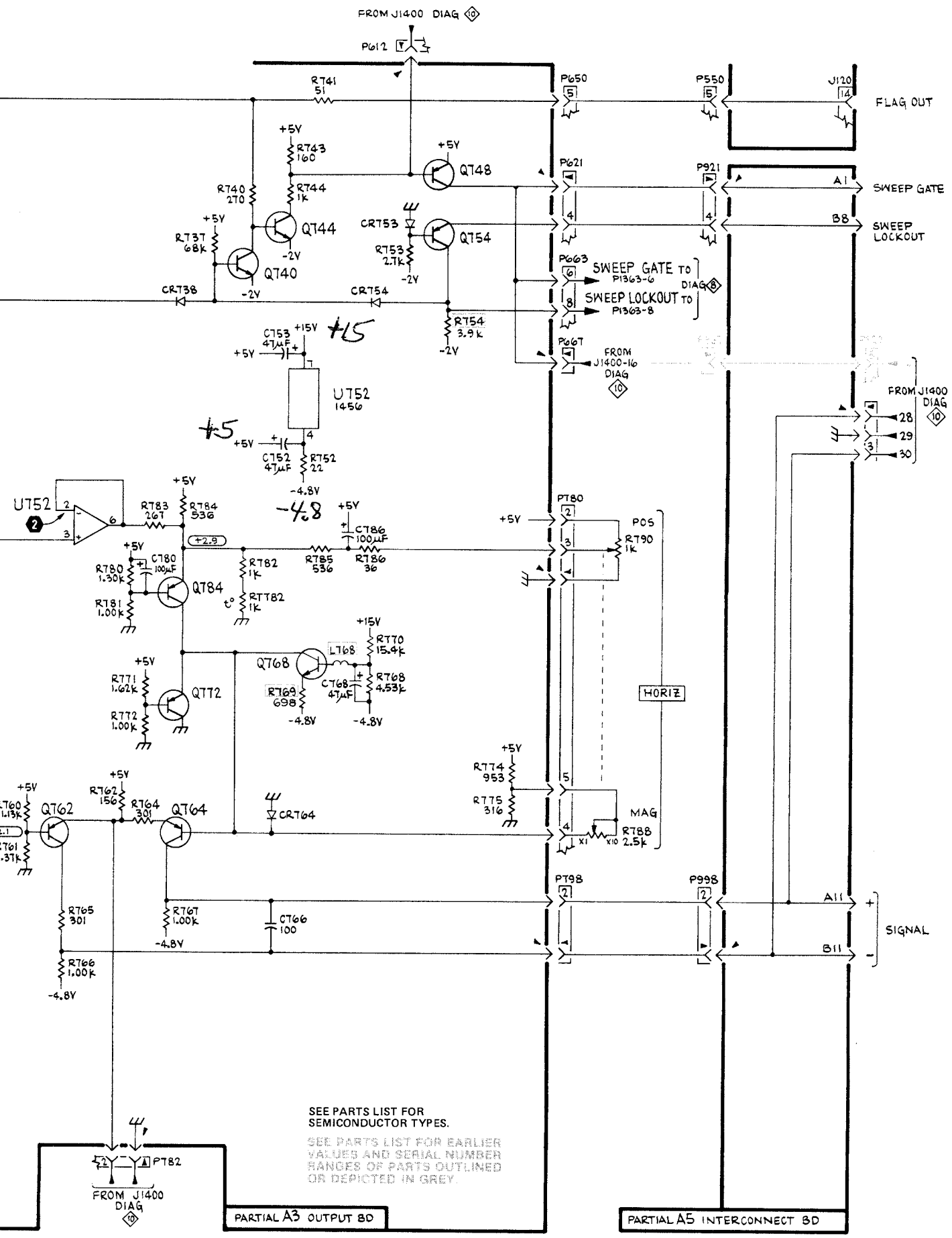

SEE PARTS LIST FOR SEMICONDUCTOR TYPES.

SEE PARTS LIST FOR EARLIER VALUES AND SERIAL NUMBER RANGES OF PARTS OUTLINED OR DEPICTED IN GREY.

2206-60
REV. C, JAN 1979

(SN B020000 & UP)
HORIZONTAL OUTPUT

Figure 8-16. A4—Cursor circuit board component locations.

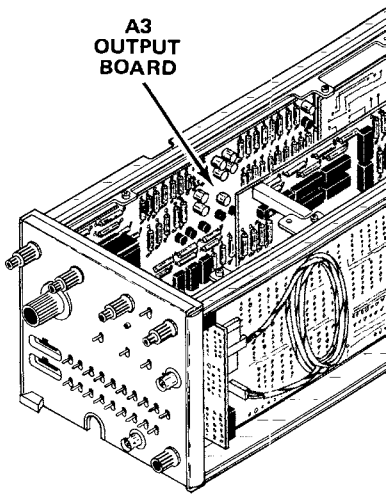

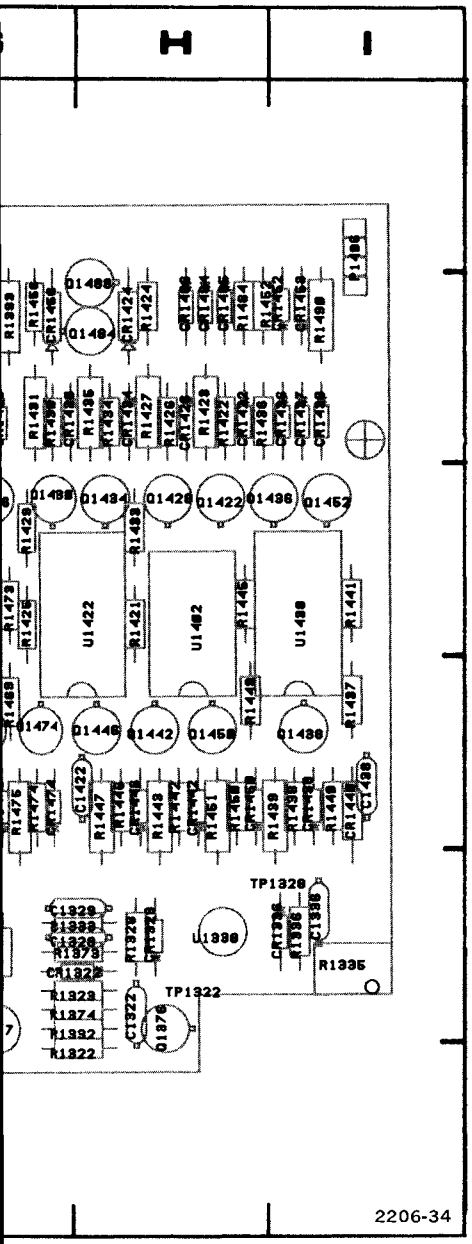

CKT NO	GRID COORD	CKT NO	GRID COORD	CKT NO	GRID COORD	CKT NO	GRID COORD	CKT NO	GRID COORD	CKT NO	GRID COORD
C1300	3E	CR1462	2G	Q1438	4I	R1354	2A	R1430	2G	R1483	4G
C1304	5E	CR1466	2G	Q1442	4H	R1361	1C	R1431	2G	R1484	2H
C1322	5H	CR1470	4G	Q1446	4H	R1363	2C	R1433	3H	R1487	2C
C1328	5G	CR1474	4G	Q1450	4H	R1364	2C	R1434	2H	R1488	4E
C1329	5G	CR1478	4F	Q1452	3I	R1370	2D	R1435	2H	R1490	2I
C1336	5I	CR1482	4G	Q1454	3F	R1371	3E	R1436	2H	R1491	2E
C1342	4A	CR1484	2H	Q1458	3F	R1372	3E	R1437	4I	R1493	2E
C1343	3A	CR1485	2H	Q1462	3G	R1373	5G	R1438	4I	R1494	4F
C1344	3A	CR1486	2H	Q1466	3G	R1374	5G	R1439	4I	R1495	3E
C1348	5E	CR1487	4F	Q1470	4G	R1375	5D	R1440	4I	R1496	2D
C1352	2A	CR1488	4F	Q1474	4G	R1376	5D	R1441	3I	R1497	1D
C1353	2A			Q1478	4F	R1381	2G	R1442	4H	R1498	1D
C1354	2A	P1314	4D	Q1482	4G	R1382	2G	R1443	4H	R1499	2D
C1364	2C	P1352	2A	Q1484	2H	R1383	2F	R1445	3H		
C1366	3C	P1357	1B	Q1486	1C	R1384	2F	R1446	4H	TP1322	5H
C1410	1C	P1362	4D	Q1488	2H	R1385	4F	R1447	4H	TP1328	5I
C1422	4H	P1363	5D	Q1497	1E	R1386	4F	R1449	4H	TP1334	4F
C1438	4I	P1367	2B	Q1499	1D	R1392	2F	R1450	4H		
CR1316	1C	P1383	4E			R1393	2G	R1451	4H	U1322	5E
CR1322	5G	P1413	4D	R1301	4E	R1394	2F	R1452	2H	U1328	5G
CR1328	5H	P1423	5F	R1302	4E	R1395	2F	R1453	3F	U1332	5F
CR1336	5I	P1492	2F	R1303	5E	R1396	2G	R1454	2F	U1334	5F
CR1370	4E	P1493	2F	R1304	5E	R1397	2G	R1455	2F	U1338	5H
CR1414	3C	P1942	3A	R1306	4E	R1403	3D	R1456	2G	U1342	3B
CR1416	4C			R1307	4E	R1404	4C	R1457	3F	U1344	3B
CR1418	4B	Q1302	4D	R1308	4E	R1405	4D	R1458	2F	U1346	3B
CR1422	2H	Q1304	5D	R1311	5E	R1406	4D	R1459	2F	U1348	3C
CR1424	2H	Q1308	4D	R1312	5E	R1411	4E	R1461	3F	U1352	2B
CR1426	2H	Q1312	5D	R1315	4E	R1412	5E	R1462	2G	U1356	2B
CR1430	2G	Q1316	4D	R1316	4E	R1413	4E	R1463	2G	U1358	2C
CR1434	2H	Q1372	4D	R1322	6G	R1414	4C	R1465	3F	U1366	3B
CR1436	2I	Q1376	5H	R1328	5H	R1415	5G	R1466	2G	U1368	3C
CR1437	2I	Q1404	3C	R1332	5G	R1416	3B	R1467	2G	U1370	3D
CR1438	4I	Q1406	4C	R1333	5G	R1417	5G	R1469	4G	U1372	3D
CR1439	2I	Q1412	5D	R1335	5I	R1418	4B	R1470	4G	U1402	3H
CR1440	4I	Q1414	3C	R1336	5I	R1419	3B	R1471	4G	U1408	3F
CR1442	4H	Q1416	4B	R1341	3A	R1421	3H	R1473	3G	U1410	2D
CR1446	4H	Q1417	5G	R1342	3A	R1422	2H	R1474	4G	U1422	3H
CR1450	4H	Q1418	4B	R1343	3A	R1423	2H	R1475	4G	U1438	3I
CR1452	2I	Q1422	3H	R1344	3A	R1424	2H	R1477	3G	U1454	3F
CR1453	2I	Q1426	3H	R1345	1B	R1425	3G	R1478	4F	U1470	3G
CR1454	2F	Q1430	3G	R1351	2A	R1426	2H	R1479	4F	U1492	2E
CR1456	2G	Q1434	3H	R1352	2A	R1427	2H	R1481	4G	U1494	3E
CR1458	2F	Q1436	3H	R1353	2A	R1429	3G	R1482	4G		

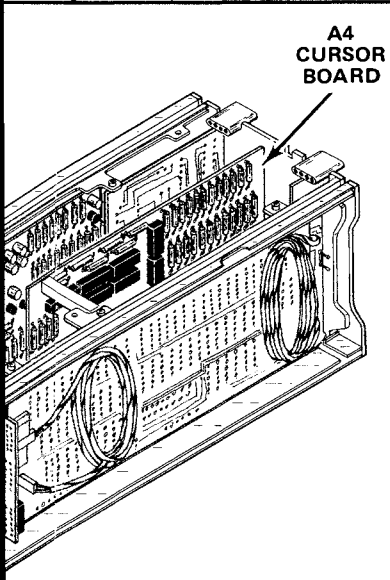

D RD	CKT NO	GRID COORD
	R1483	4G
	R1484	2H
	R1487	2C
	R1488	4E
	R1490	2I
	R1491	2E
	R1493	2E
	R1494	4F
	R1495	3E
	R1496	2D
	R1497	1D
	R1498	1D
	R1499	2D
	TP1322	5H
	TP1328	5I
	TP1334	4F
	U1322	5E
	U1328	5G
	U1332	5F
	U1334	5F
	U1338	5H
	U1342	3B
	U1344	3B
	U1346	3B
	U1348	3C
	U1352	2B
	U1356	2B
	U1358	2C
	U1366	3B
	U1368	3C
	U1370	3D
	U1372	3D
	U1402	3H
	U1408	3F
	U1410	2D
	U1422	3H
	U1438	3I
	U1454	3F
	U1470	3G
	U1492	2E
	U1494	3E

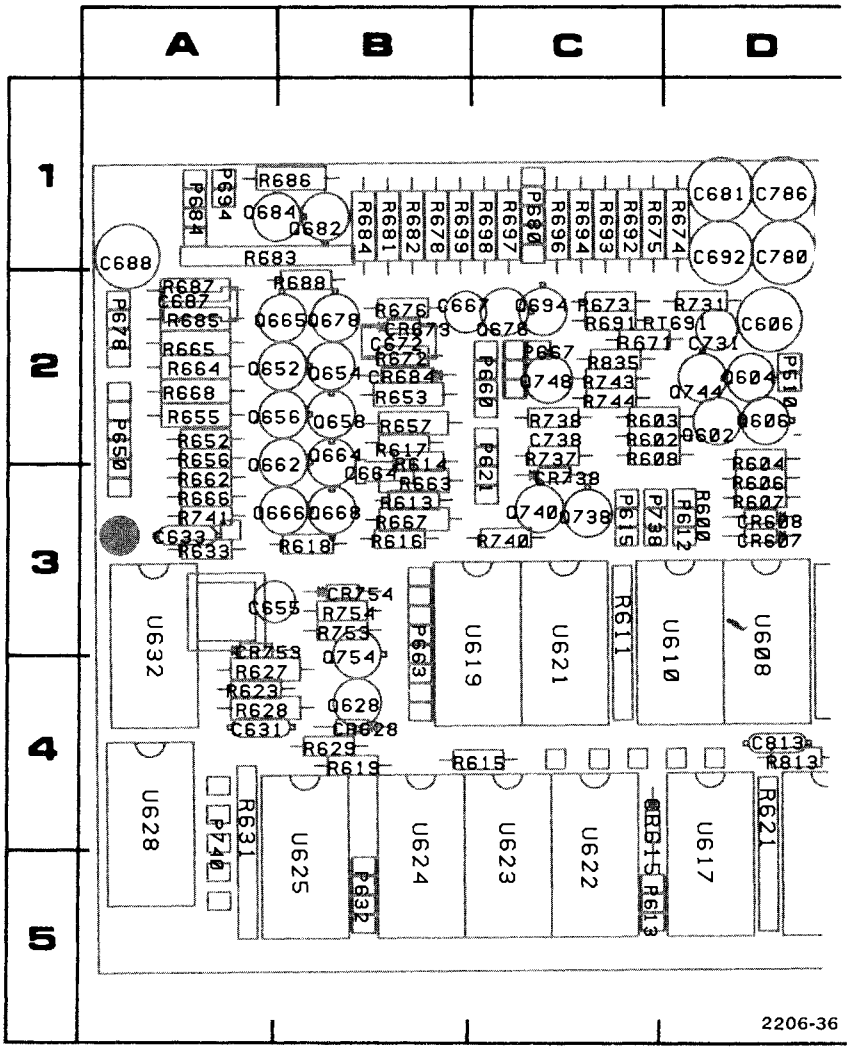

COMPONENT LOCATIONS AS VIEWED WITH BOARD INSTALLED. FOR VIEW OF COMPONENT SIDE OF BOARD, SEE FIGURE 8-5 IN THIS SECTION.

Figure 8-17. Partial A3—Output circuit board. Component locations as viewed with board installed.

CKT NO	GRID COORD	CKT NO	GRID COORD	CKT NO	GRID COORD	CKT NO	GRID COORD	CKT NO	GRID COORD	CKT NO	GRID COORD
C606	2D	P510	2D	Q662	2B	R613	3B	R668	2A	R740	3C
C631	4B	P612	3D	Q664	2B	R614	2B	R671	2C	R741	3A
C633	3A	P613	5C	Q665	2B	R615	4C	R672	2B	R743	2C
C667	2C	P615	3C	Q666	3B	R616	3B	R673	2C	R744	2C
C672	2B	P621	2C	Q668	3B	R617	2B	R676	2B	R754	3B
C681	1D	P632	5B	Q676	2C	R618	3B	R678	1B	R783	2E
C687	2A	P650	2A	Q678	2B	R619	4B	R681	1B	R813	4D
C688	1A	P660	2C	Q682	1B	R621	5D	R682	1B	R835	2C
C692	1D	P663	3B	Q684	1B	R623	4B	R683	1B		
C731	2D	P678	2A	Q694	2C	R627	4B	R684	1B	U608	3D
C738	2C	P680	1C	Q738	3C	R628	4B	R685	2A	U610	3D
C780	1D	P684	1A	Q740	3C	R629	4B	R686	1B	U617	5D
C786	1D	P694	1A	Q744	2D	R631	4A	R687	2A	U619	3C
C813	4D	P738	3D	Q748	2C	R633	3A	R688	2B	U621	3C
		P740	4A	Q754	3B	R652	2A	R692	1C	U662	5C
						R653	2B	R693	1C	U623	5C
CR607	3D	Q602	2D	R600	3D	R656	2A	R694	1C	U624	4B
CR608	3D	Q604	2D	R602	2D	R657	2B	R696	1C	U625	5B
CR615	4C	Q606	2D	R603	2D	R662	3A	R697	1C	U628	4A
CR628	4B	Q628	4B	R604	2D	R663	2B	R698	1C	U632	3A
CR673	2B	Q652	2B	R606	3D	R664	2A	R699	1C		
CR738	3C	Q654	2B	R607	3D	R665	2A	R731	2C		
CR753	3B	Q656	2B	R608	2D	R666	3A	R737	2C		
CR754	3B	Q658	2B	R611	3C	R667	3B	R738	2C		

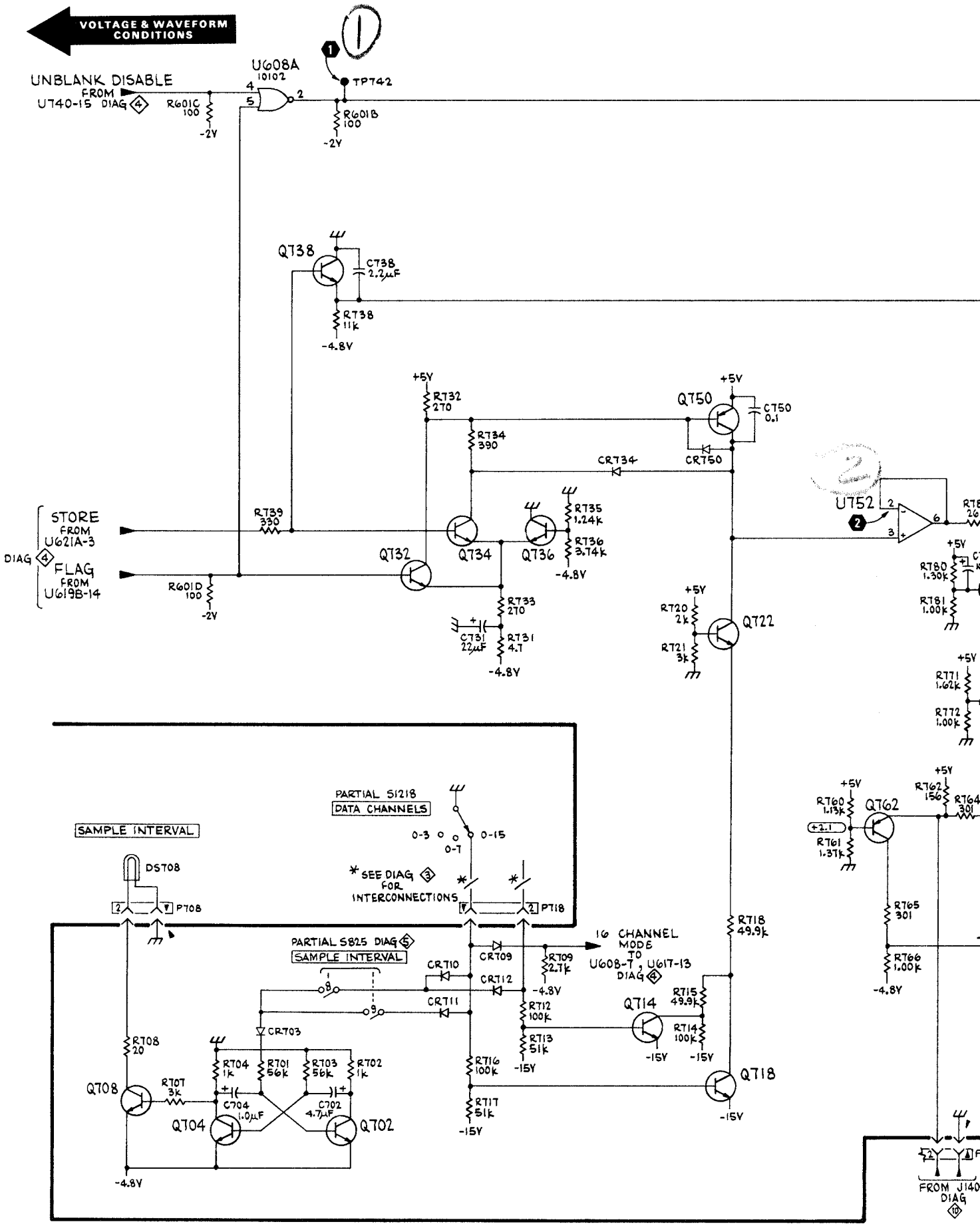
VOLTAGE & WAVEFORM CONDITIONS
UNBLANK DISABLE FROM U740-15 DIAG 4
U608A 10102
TP742
R601C 100
-2V
R601B 100
-2V
Q738
C738 2.2µF
R738 11k
-4.8V
+5V
R732 270
R734 390
Q750
C750 0.1
CR750
CR734
U752
STORE FROM U621A-3
FLAG FROM U619B-14
DIAG 4
R739 330
Q732
Q734
Q736
R735 1.24k
R736 3.74k
-4.8V
R601D 100
-2V
R733 270
C731 22µF
R731 4.7
-4.8V
R720 2k
R721 3k
Q722
R780 1.30k
R781 1.00k
R771 1.62k
R772 1.00k
Q762
R760 1.13k
R761 1.37k
R762 156
R764 301
R765 301
R766 1.00k
-4.8V
PARTIAL 51218 DATA CHANNELS
0-3
0-7
0-15
* SEE DIAG 3 FOR INTERCONNECTIONS
PT718
SAMPLE INTERVAL
DS708
PT708
PARTIAL S825 DIAG 5
SAMPLE INTERVAL
CR709
R709 2.7k
16 CHANNEL MODE TO U608-T, U617-13 DIAG 4
CR710
CR712
CR711
CR703
R718 49.9k
R715 49.9k
Q714
R712 100k
R713 51k
R714 100k
-15V
R716 100k
R717 51k
Q718
R708 20
Q708
R707 3k
R704 1k
R701 56k
R703 56k
R702 1k
C704 1.0µF
C702 4.7µF
Q704
Q702
-4.8V
FROM J140 DIAG 10

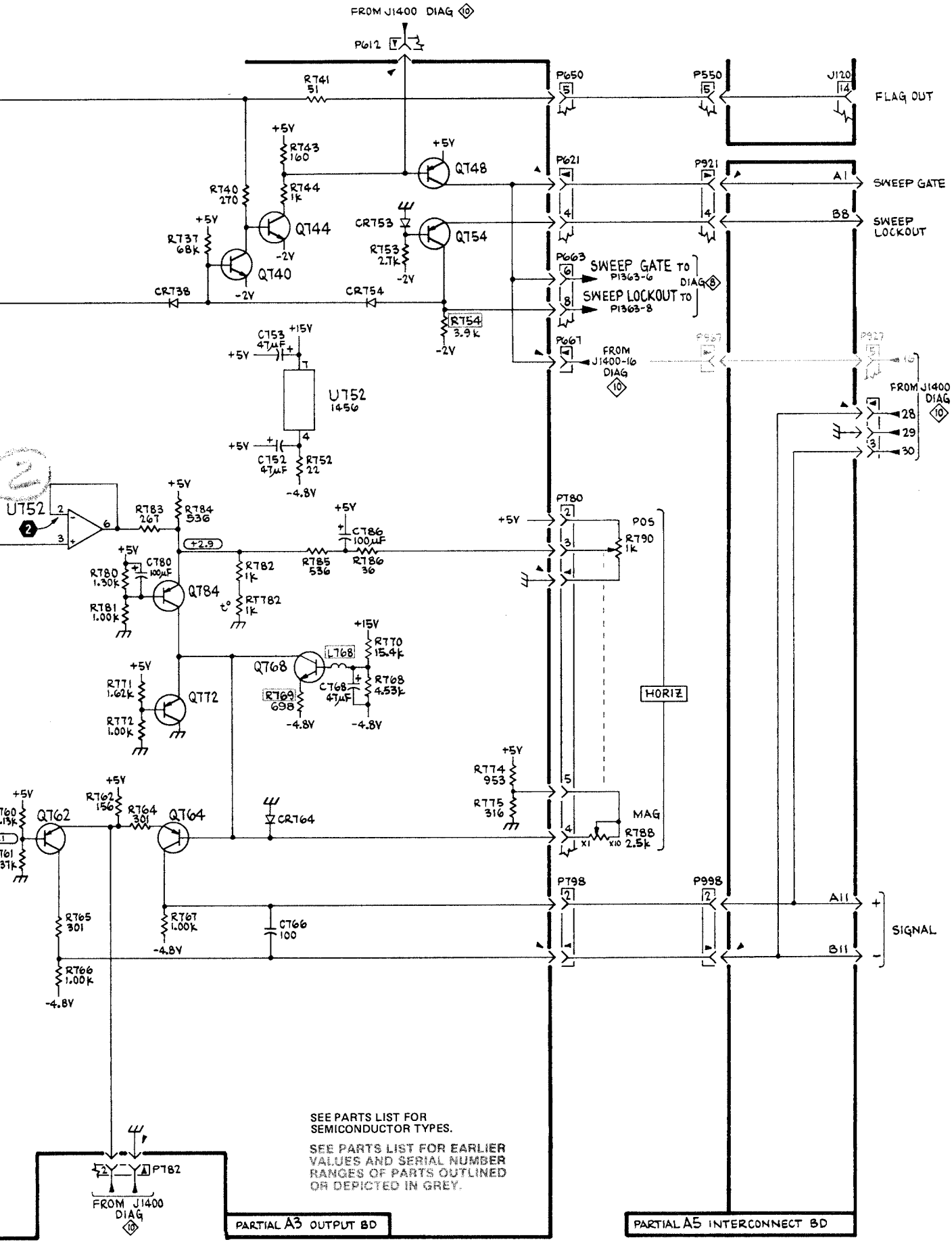

2206-60
REV D FEB 1980

(SN B020000 & UP)
HORIZONTAL OUTPUT 7

7D01 (SN B020000 & up)

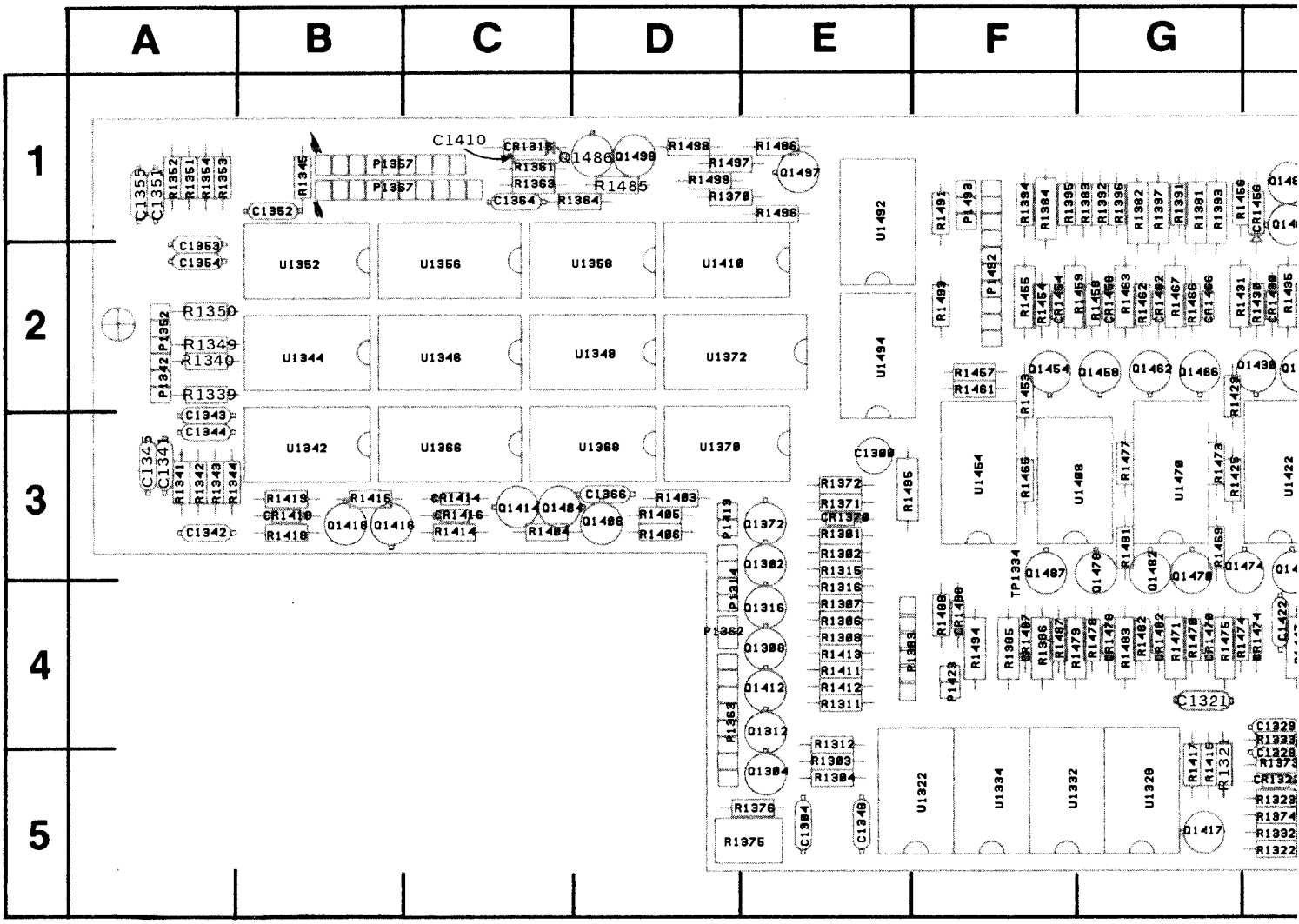

Figure 8-16. A4—Cursor circuit board component locations (SN B090000 & up).

CKT NO	GRID LOC	CKT NO	GRID LOC	CKT NO	GRID LOC	CKT NO	GRID LOC	CKT NO	GRID LOC	CKT NO	GRID LOC	CKT NO	GRID LOC	CKT NO	GRID LOC	CKT NO	GRI LO
C1300	3E	CR1414	3C	CR1486	1H	Q1416	3B	R1301	3E	R1351	1A	R1404	3C	R1440	4I	R1475	4
C1304	5E	CR1416	3C	CR1487	4F	Q1417	5G	R1302	3E	R1352	1A	R1405	3D	R1441	3I	R1477	3
C1321	4G	CR1418	3B	CR1488	4F	Q1418	3B	R1303	5E	R1353	2A	R1406	3D	R1442	4H	R1478	4
C1322	5H	CR1422	2H			Q1422	2H	R1304	5E	R1354	1A	R1411	4E	R1443	4H	R1479	4
C1328	5G	CR1424	1H	P1314	4D	Q1426	2H	R1306	4E	R1361	1C	R1412	4E	R1445	3H	R1481	3
C1329	4G	CR1426	2H	P1342	2A	Q1430	2G	R1307	4E	R1363	1C	R1413	4E	R1446	4H	R1482	4
C1336	4I	CR1430	2G	P1351	2A	Q1434	2H	R1308	4E	R1364	1C	R1414	3C	R1447	4H	R1483	4
C1341	3A	CR1434	2H	P1357	1B	Q1436	2H	R1311	4E	R1370	1D	R1415	5G	R1449	3H	R1484	1
C1342	3A	CR1436	2I	P1362	4D	Q1438	3I	R1312	5E	R1371	3E	R1416	3B	R1450	4H	R1485	1
C1343	3A	CR1437	2I	P1363	4D	Q1442	3H	R1315	3E	R1372	3E	R1417	5G	R1451	4H	R1486	1
C1344	3A	CR1438	4I	P1367	1B	Q1446	3H	R1316	4E	R1373	5G	R1418	3B	R1452	1I	R1487	4
C1345	3A	CR1439	2I	P1383	4E	Q1450	3H	R1321	5G	R1374	5G	R1419	3B	R1453	2F	R1488	4
C1348	5E	CR1440	4I	P1413	3D	Q1452	2I	R1322	5G	R1375	5D	R1421	3H	R1454	2F	R1490	1
C1351	1A	CR1442	4H	P1423	4F	Q1454	2F	R1328	5H	R1376	5D	R1422	2H	R1455	2F	R1491	1
C1352	1A	CR1446	4H	P1492	2F	Q1458	2F	R1329	5I	R1381	1G	R1423	2H	R1456	1G	R1493	2
C1353	2A	CR1450	4H	P1493	1F	Q1462	2G	R1331	5I	R1382	1G	R1424	1H	R1457	2F	R1494	4
C1354	2A	CR1452	1I	P1496	1A	Q1466	2G	R1332	5G	R1383	1F	R1425	3G	R1458	2F	R1495	3
C1355	1A	CR1453	1I			Q1470	3G	R1333	4G	R1384	1F	R1426	2H	R1459	2F	R1496	1
C1364	1C	CR1454	2F	Q1302	3D	Q1474	3G	R1335	5I	R1385	4F	R1427	2H	R1461	2F	R1497	1
C1366	3C	CR1456	1G	Q1304	5D	Q1478	3F	R1336	5I	R1386	4F	R1429	2G	R1462	2G	R1498	1
C1410	1C	CR1458	2F	Q1308	4D	Q1482	3G	R1339	2A	R1391	1G	R1430	2G	R1463	2G	R1499	1
C1422	4H	CR1462	2G	Q1312	4D	Q1484	1H	R1340	2A	R1391	1G	R1431	2G	R1465	3F		
C1438	4I	CR1466	2G	Q1316	4D	Q1486	1C	R1341	3A	R1392	1F	R1433	2H	R1466	2G	TP1322	5
		CR1470	4G	Q1372	3D	Q1487	3F	R1342	3A	R1393	1G	R1434	2H	R1467	2G	TP1328	4
CR1316	1C	CR1474	4G	Q1376	5H	Q1488	1H	R1343	3A	R1394	1F	R1435	2H	R1469	3G	TP1334	3
CR1322	5G	CR1478	4F	Q1404	3C	Q1497	1E	R1344	3A	R1395	1F	R1436	2I	R1470	4G		
CR1328	5H	CR1482	4G	Q1406	3C	Q1498	1D	R1345	1B	R1396	1G	R1437	3I	R1471	4G	U1322	5
CR1336	5I	CR1484	1H	Q1412	4D			R1349	2A	R1397	1G	R1438	4I	R1473	3G	U1328	5
CR1370	3E	CR1485	1H	Q1414	3C			R1350	2A	R1403	3D	R1439	4I	R1474	4G	U1332	5

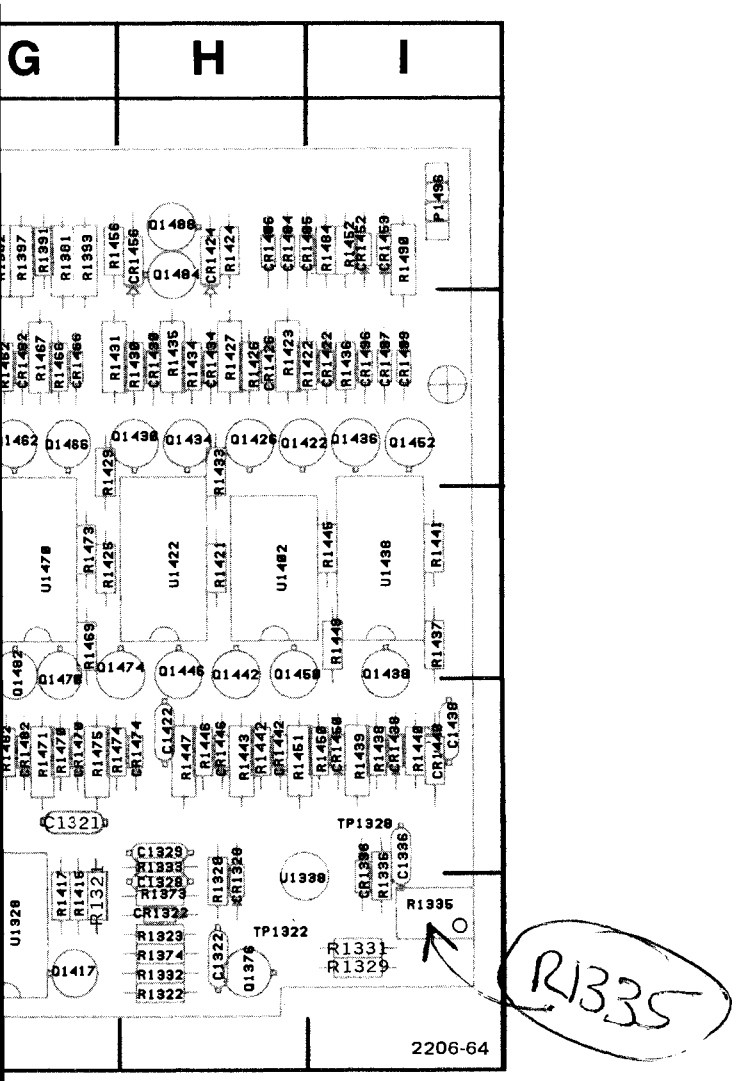

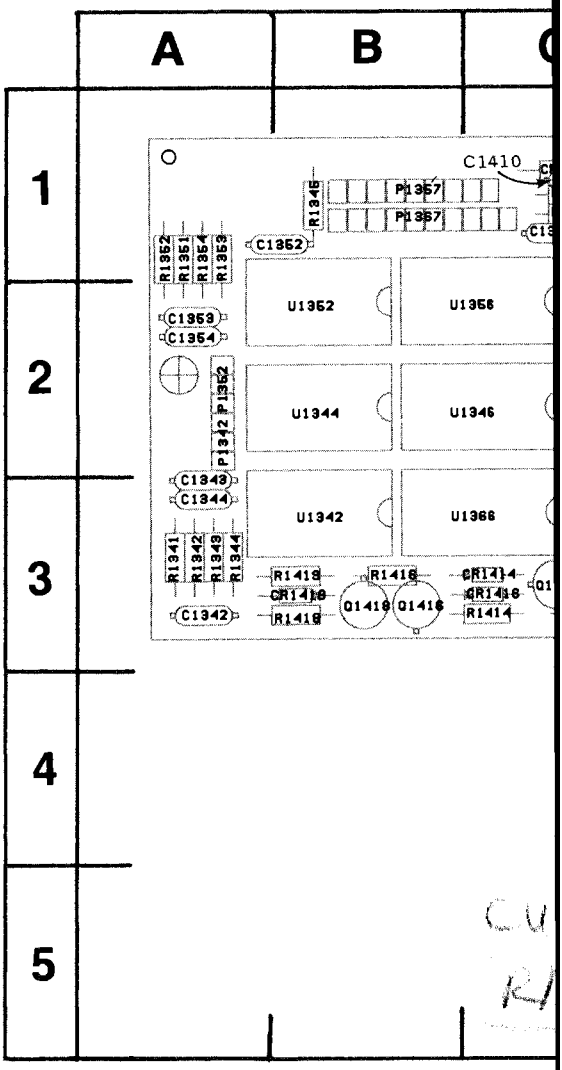

Figure 8-1

CKT NO	GRID LOC	CKT NO	GRID LOC	CKT NO	GRID LOC
	4I	R1475	4G	U1334	5F
	3I	R1477	3G	U1338	5H
	4H	R1478	4F	U1342	3B
	4H	R1479	4F	U1344	2B
	3H	R1481	3G	U1346	2B
	4H	R1482	4G	U1348	2C
	4H	R1483	4G	U1352	2B
	3H	R1484	1H	U1356	2B
	4H	R1485	1D	U1358	2C
	4H	R1486	1D	U1366	3B
	1I	R1487	4F	U1368	3C
	2F	R1488	4E	U1370	3D
	2F	R1490	1I	U1372	2D
	2F	R1491	1E	U1402	3H
	1G	R1493	2E	U1408	3F
	2F	R1494	4F	U1410	2D
	2F	R1495	3E	U1422	3H
	2F	R1496	1D	U1438	3I
	2F	R1497	1D	U1454	3F
	2G	R1498	1D	U1470	3G
	2G	R1499	1D	U1492	1E
	3F			U1494	2E
	2G	TP1322	5H		
	2G	TP1328	4I		
	3G	TP1334	3F		
	4G				
	4G	U1322	5E		
	3G	U1328	5G		
	4G	U1332	5F		

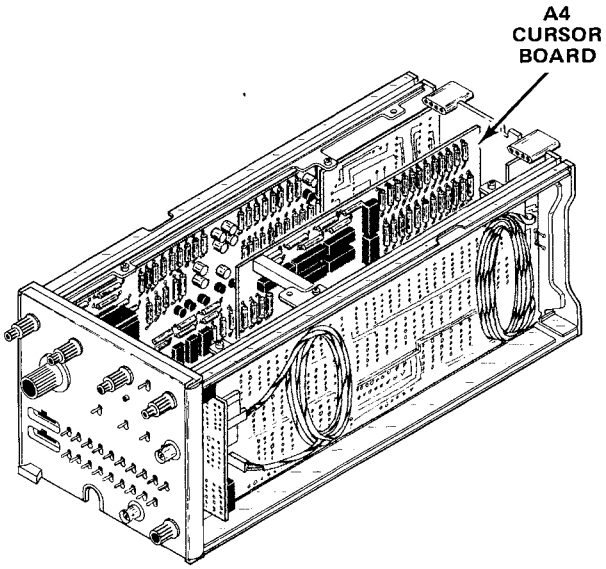

CKT NO	GRID LOC	CKT NO	GRID LOC	CKT NO	GRID LOC
C1300	3E	CR1426	2H	P1342	2A
C1304	5E	CR1430	2G	P1352	2A
C1322	5H	CR1434	2H	P1357	1B
C1328	5G	CR1436	2I	P1362	4D
C1329	4G	CR1437	2I	P1363	4D
C1336	4I	CR1438	4I	P1367	1B
C1342	3A	CR1439	2I	P1383	4E
C1343	3A	CR1440	4I	P1413	3D
C1344	3A	CR1442	4H	P1423	4F
C1348	5E	CR1446	4H	P1492	2F
C1352	1A	CR1450	4H	P1493	1F
C1353	2A	CR1452	1I	P1496	1A
C1354	2A	CR1453	1I		
C1364	1C	CR1454	2F	Q1302	3D
C1366	3C	CR1456	1G	Q1304	5D
C1410	1C	CR1458	2F	Q1308	4D
C1422	4H	CR1462	2G	Q1312	4D
C1438	4I	CR1466	2G	Q1316	4D
		CR1470	4G	Q1372	3D
CR1316	1C	CR1474	4G	Q1376	5H
CR1322	5G	CR1478	4F	Q1404	3C
CR1328	5H	CR1482	4G	Q1406	3C
CR1336	5I	CR1484	1H	Q1412	4D
CR1370	3E	CR1485	1H	Q1414	3C
CR1414	3C	CR1486	1H	Q1416	3B
CR1416	3C	CR1487	4F	Q1417	5G
CR1418	3B	CR1488	4F	Q1418	3B
CR1422	2H			Q1422	2H
CR1424	1H	P1314	4D	Q1426	2H

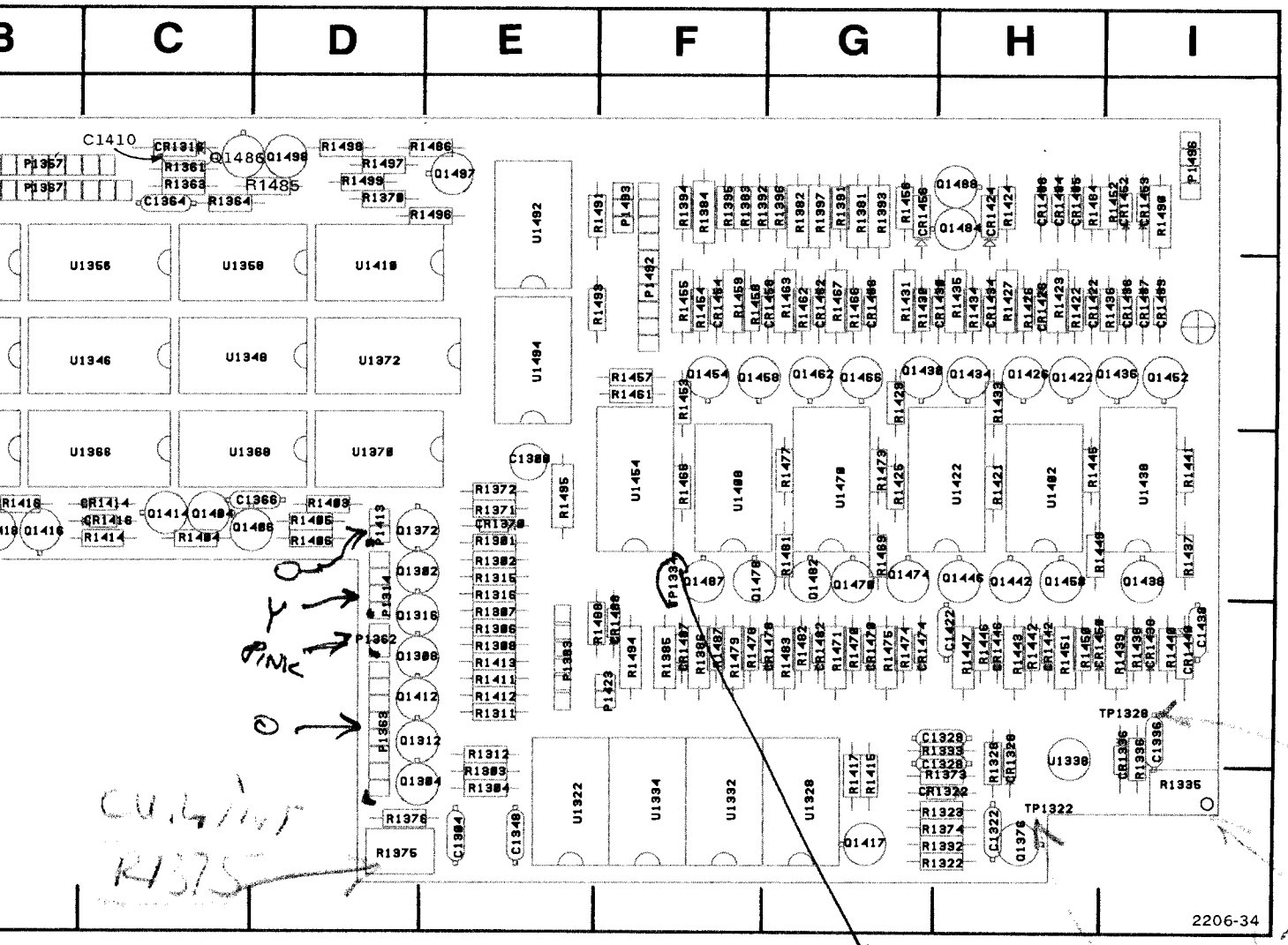

Figure 8-17. A4—Cursor circuit board component locations (SN B020000 – B089999).

CKT NO	GRID LOC	CKT NO	GRID LOC	CKT NO	GRID LOC	CKT NO	GRID LOC	CKT NO	GRID LOC	CKT NO	GRID LOC	CKT NO	GRID LOC	CKT NO	GRID LOC
P1342	2A	Q1430	2G	R1308	4E	R1376	5D	R1423	2H	R1456	1G	R1493	2E	U1408	3F
P1352	2A	Q1434	2H	R1311	4E	R1381	1G	R1424	1H	R1457	2F	R1494	4F	U1410	2D
P1357	1B	Q1436	2H	R1312	5E	R1382	1G	R1425	3G	R1458	2F	R1495	3E	U1422	3H
P1362	4D	Q1438	3I	R1315	3E	R1383	1F	R1426	2H	R1459	2F	R1496	1D	U1438	3I
P1363	4D	Q1442	3H	R1316	4E	R1384	1F	R1427	2H	R1461	2F	R1497	1D	U1454	3F
P1367	1B	Q1446	3H	R1322	5G	R1385	4F	R1429	2G	R1462	2G	R1498	1D	U1470	3G
P1383	4E	Q1450	3H	R1328	5H	R1386	4F	R1430	2G	R1463	2G	R1499	1D	U1492	1E
P1413	3D	Q1452	2I	R1332	5G	R1391	1G	R1431	2G	R1465	3F			U1494	2E
P1423	4F	Q1454	2F	R1333	4G	R1392	1F	R1433	2H	R1466	2G	TP1322	5H		
P1492	2F	Q1458	2F	R1335	5I	R1393	1G	R1434	2H	R1467	2G	TP1328	4I		
P1493	1F	Q1462	2G	R1336	5I	R1394	1F	R1435	2H	R1469	3G	TP1334	3F		
P1496	1A	Q1466	2G	R1341	3A	R1395	1F	R1436	2I	R1470	4G				
		Q1470	3G	R1342	3A	R1396	1G	R1437	3I	R1471	4G	U1322	5E		
Q1302	3D	Q1474	3G	R1343	3A	R1397	1G	R1438	4I	R1473	3G	U1328	5G		
Q1304	5D	Q1478	3F	R1344	3A	R1403	3D	R1439	4I	R1474	4G	U1332	5F		
Q1308	4D	Q1482	3G	R1345	1B	R1404	3C	R1440	4I	R1475	4G	U1334	5F		
Q1312	4D	Q1484	1H	R1351	1A	R1405	3D	R1441	3I	R1477	3G	U1338	5H		
Q1316	4D	Q1486	1C	R1352	1A	R1406	3D	R1442	4H	R1478	4F	U1342	3B		
Q1372	3D	Q1487	3F	R1353	2A	R1411	4E	R1443	4H	R1479	4F	U1344	2B		
Q1376	5H	Q1488	1H	R1354	1A	R1412	4E	R1445	3H	R1481	3G	U1346	2B		
Q1404	3C	Q1497	1E	R1361	1C	R1413	4E	R1446	4H	R1482	4G	U1348	2C		
Q1406	3C	Q1498	1D	R1363	1C	R1414	3C	R1447	4H	R1483	4G	U1352	2B		
Q1412	4D			R1364	1C	R1415	5G	R1449	3H	R1484	1H	U1356	2B		
Q1414	3C	R1301	3E	R1370	1D	R1416	3B	R1450	4H	R1485	1D	U1358	2C		
Q1416	3B	R1302	3E	R1371	3E	R1417	5G	R1451	4H	R1486	1D	U1366	3B		
Q1417	5G	R1303	5E	R1372	3E	R1418	3B	R1452	1I	R1487	4F	U1368	3C		
Q1418	3B	R1304	5E	R1373	5G	R1419	3B	R1453	2F	R1488	4E	U1370	3D		
Q1422	2H	R1306	4E	R1374	5G	R1421	3H	R1454	2F	R1490	1I	U1372	2D		
Q1426	2H	R1307	4E	R1375	5D	R1422	2H	R1455	2F	R1491	1E	U1402	3H		

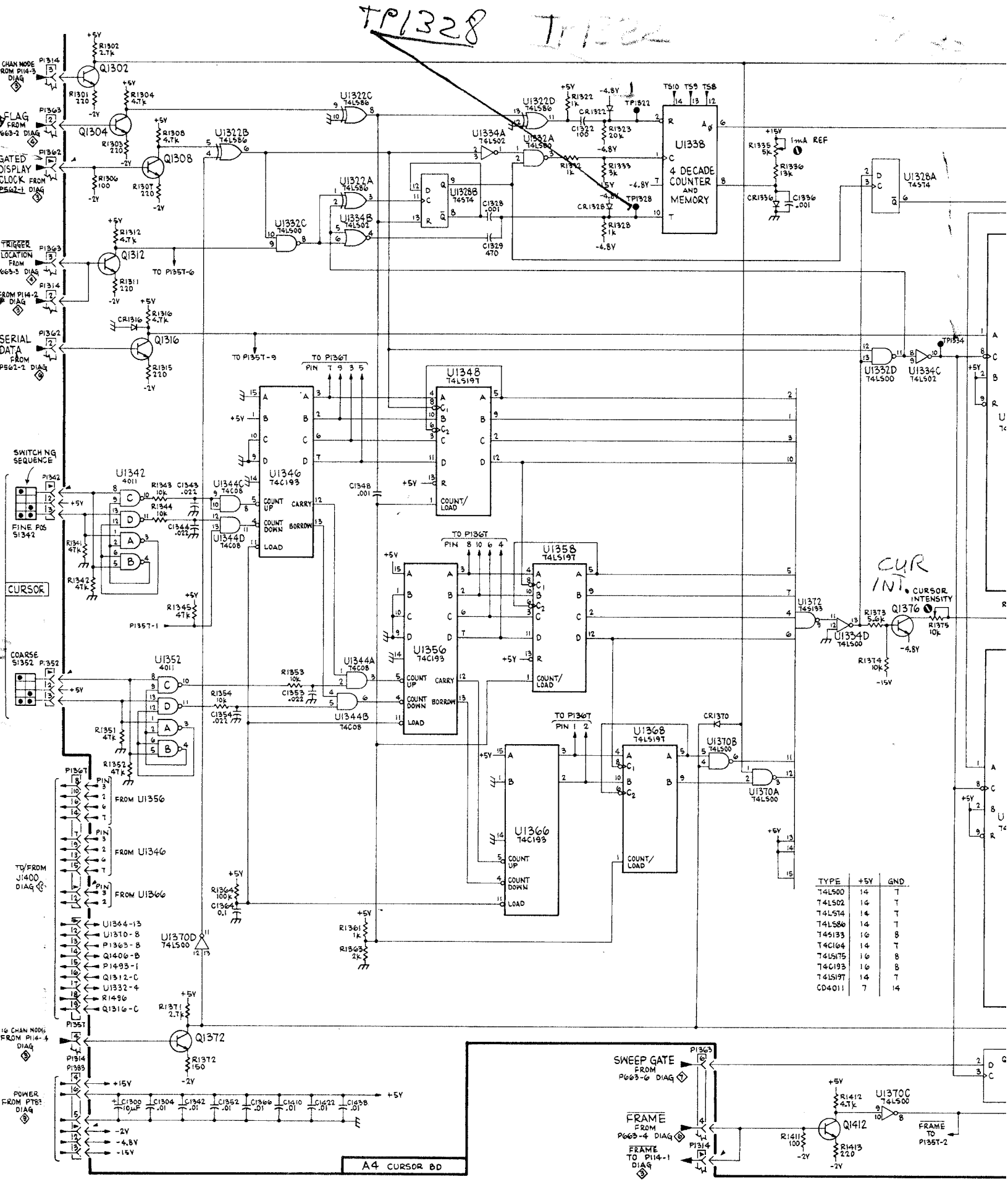

TYPE	+5V	GND
74LS00	14	7
74LS02	14	7
74LS74	14	7
74LS86	14	7
74S133	16	8
74C164	14	7
74LS175	16	8
74C193	16	8
74LS197	14	7
CD4011	7	14

7D01

REV. A, MAR 77

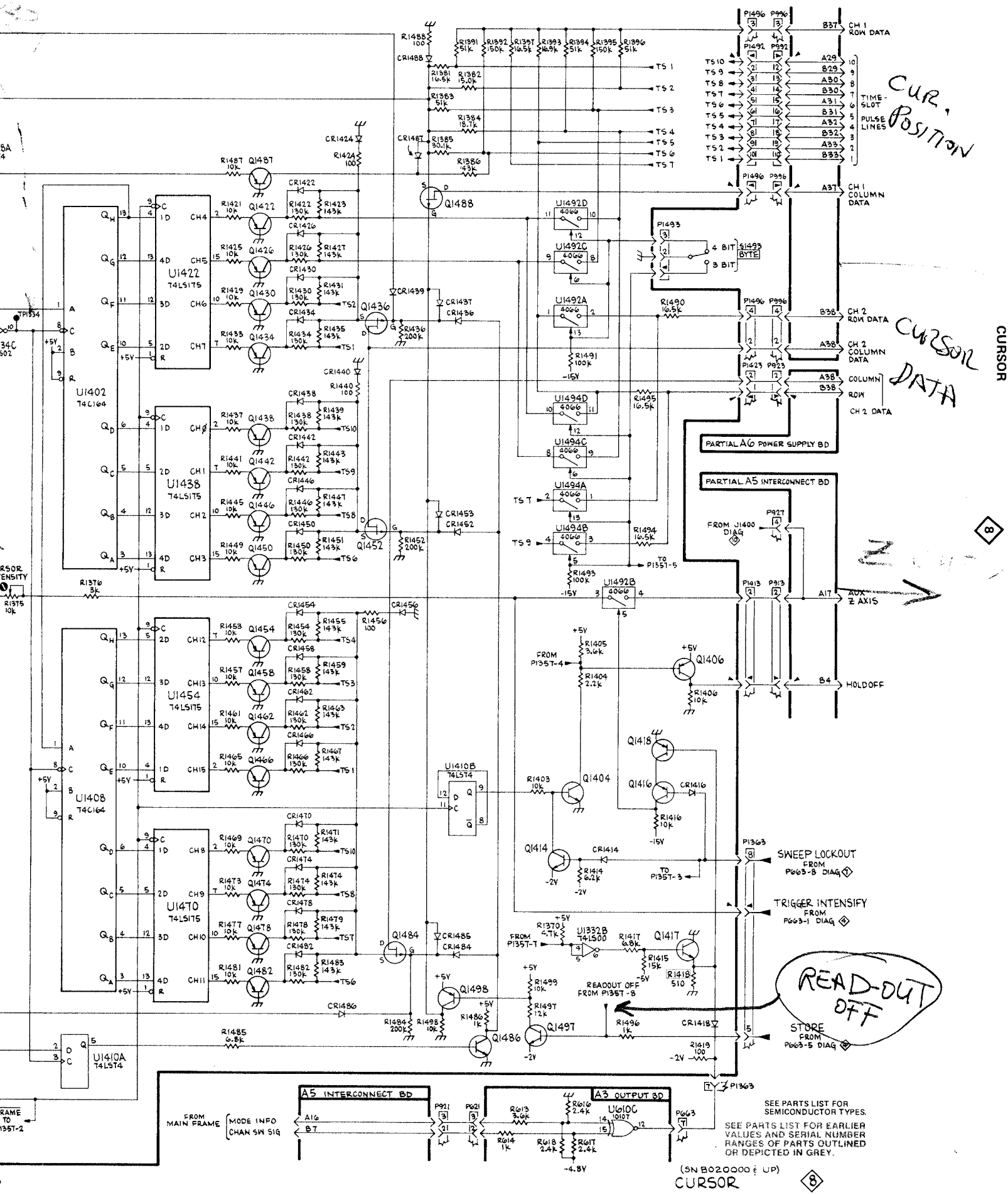
CUR. POSITION
CURSOR DATA
CURSOR
8
CH 1 ROW DATA
CH 1 COLUMN DATA
CH 2 ROW DATA
CH 2 COLUMN DATA
COLUMN
ROW
CH 2 DATA
TIME-SLOT
PULSE LINES
4 BIT
3 BIT
S1493 BYTE
PARTIAL A6 POWER SUPPLY BD
PARTIAL A5 INTERCONNECT BD
FROM U1400 DIAG
AUX Z AXIS
HOLDOFF
SWEEP LOCKOUT FROM P663-8 DIAG
TRIGGER INTENSIFY FROM P663-1 DIAG
STORE FROM P663-5 DIAG
READOUT OFF FROM P135T-8
READ-OUT OFF
U1402 74C164
U1408 74C164
U1422 74LS175
U1438 74LS175
U1454 74LS175
U1470 74LS175
U1410A 74LS74
U1410B 74LS74
U1492A 4066
U1492B 4066
U1492C 4066
U1492D 4066
U1494A 4066
U1494B 4066
U1494C 4066
U1494D 4066
U1332B 74LS00
U1610C 10107
A5 INTERCONNECT BD
A3 OUTPUT BD
FROM MAIN FRAME
MODE INFO
CHAN SW SIG
SEE PARTS LIST FOR SEMICONDUCTOR TYPES.
SEE PARTS LIST FOR EARLIER VALUES AND SERIAL NUMBER RANGES OF PARTS OUTLINED OR DEPICTED IN GREY.
(SN B020000 & UP)
CURSOR
8

Q926
Q928
Q962

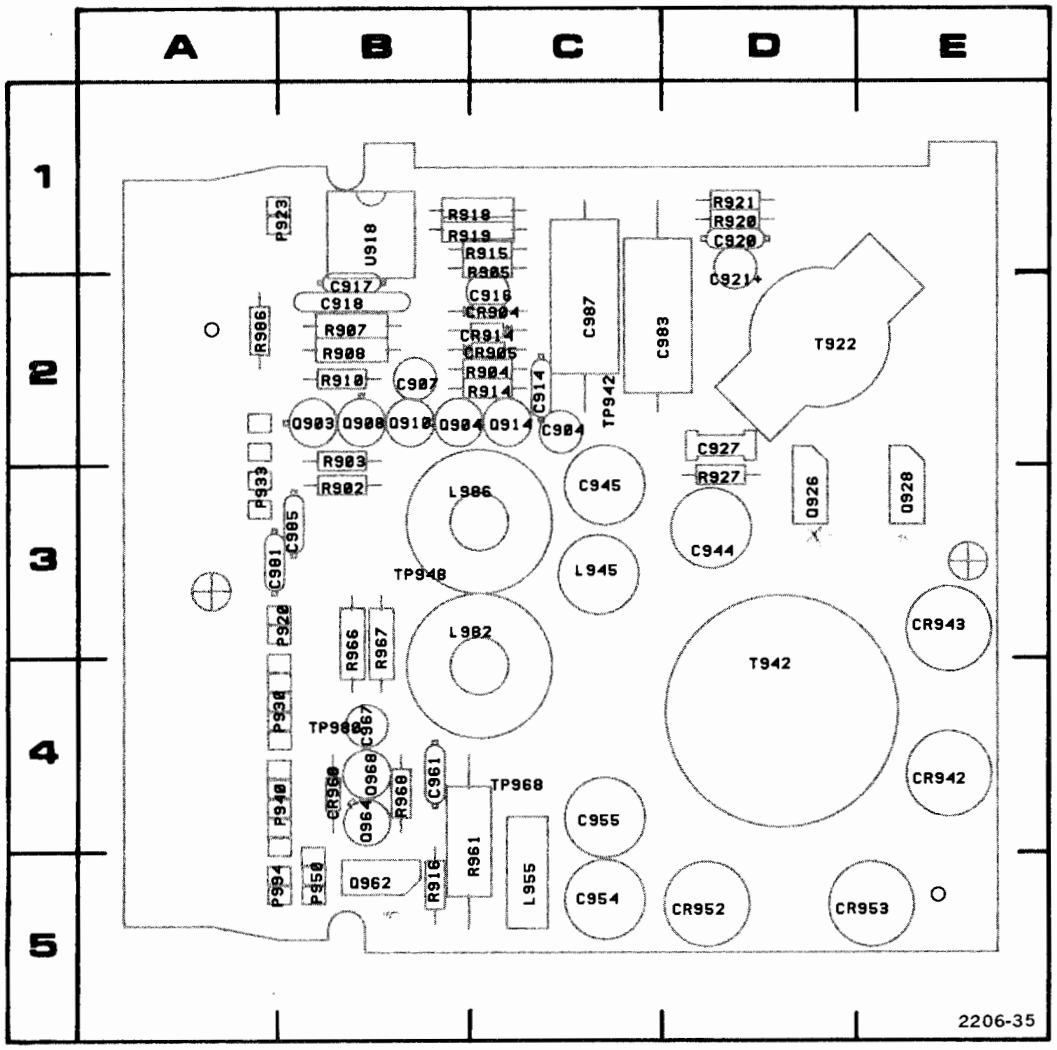

Figure 8-18. A6—Power Supply circuit board component locations.

Heat Sink

Jumper cables on PS Board

		To Board	
Yellow	P994	P694	output
BLK	P920	P1020	WR
Cursor	P923	P1423	CURSOR

CKT NO	GRID COORD	CKT NO	GRID COORD	CKT NO	GRID COORD	CKT NO	GRID COORD	CKT NO	GRID COORD
C904	2C	C983	2C	P920	3B	Q968	4B	R961	4C
C907	2B	C985	3B	P923	1B			R966	3B
C914	2C	C987	2C	P930	4B	R902	3B	R967	3B
C916	2C			P933	3A	R903	2B	R968	4B
C917	2B	CR904	2C	P940	4B	R904	2C	R986	2A
C918	2B	CR905	2C	P950	5B	R905	2C		
C920	1D	CR914	2C	P994	5B	R907	2B	T922	2D
C921	2D	CR942	4E			R908	2B	T942	4D
C927	3D	CR943	3E	Q903	2B	R910	2B		
C944	3D	CR952	5D	Q904	2B	R914	2C	TP942	2C
C945	3C	CR968	4B	Q908	2B	R915	1C	TP948	3B
C953	5E			Q910	2B	R916	5B	TP968	4C
C954	5C			Q914	2C	R918	1C	TP980	4B
C955	4C	L945	3C	Q926	3D	R919	1C		
C961	4B	L955	5C	Q928	3E	R920	1D	U918	1B
C967	4B	L982	4C	Q962	5B	R921	1D		
C981	3A	L986	3C	Q964	4B	R927	3D		

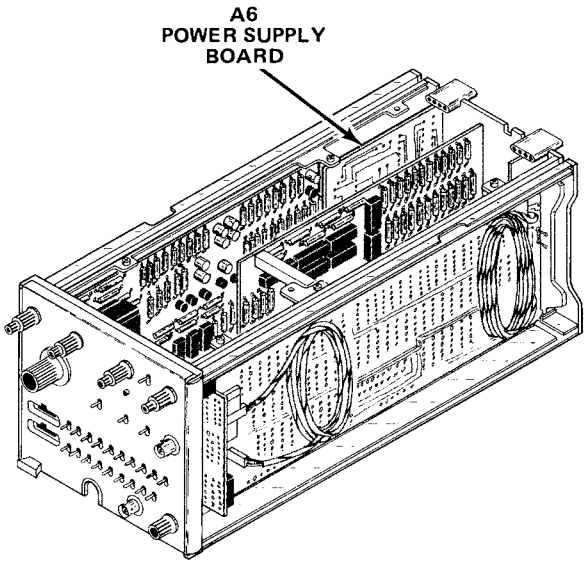

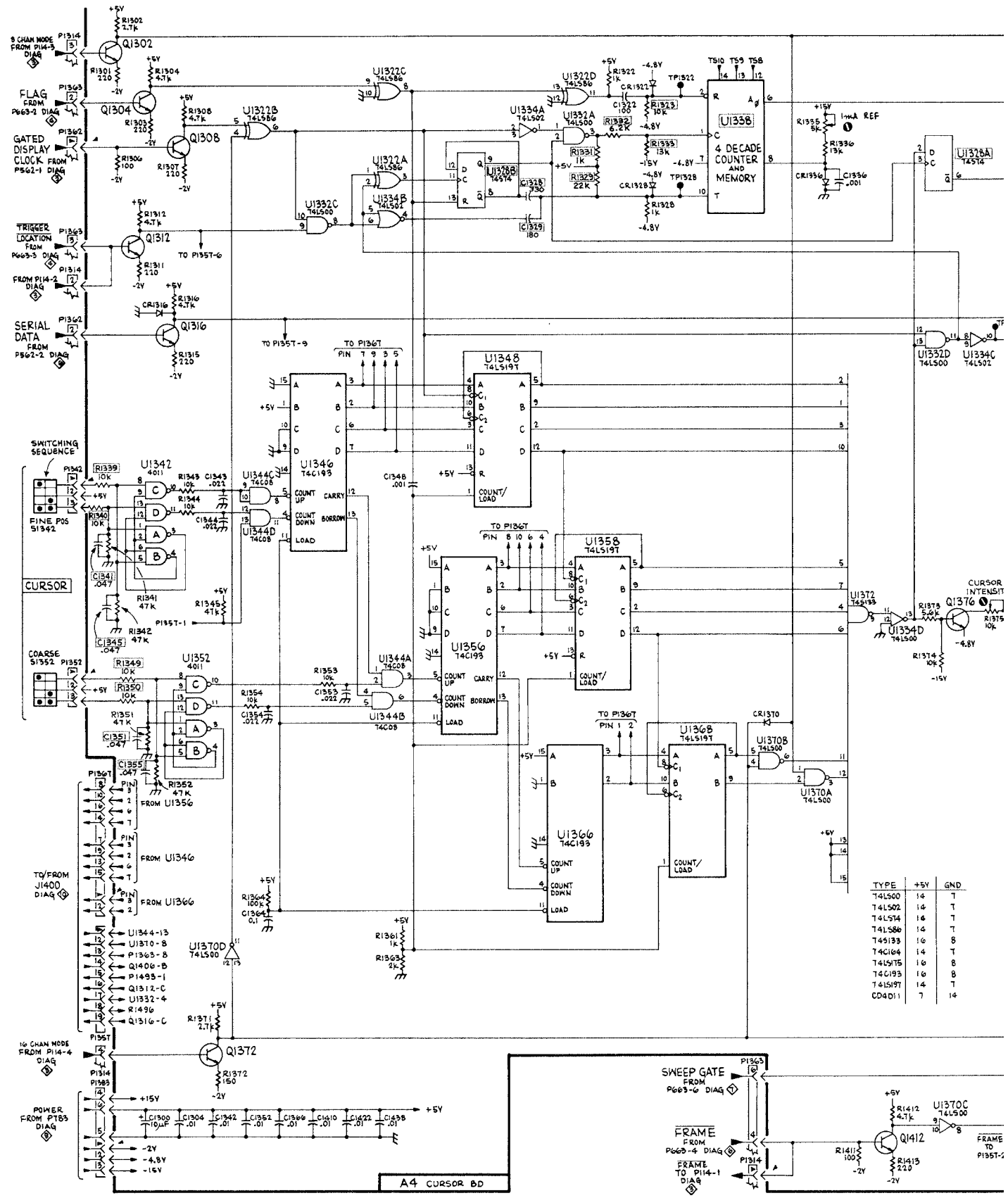

TYPE	+5V	GND
74LS00	14	7
74LS02	14	7
74LS74	14	7
74LS86	14	7
74S133	16	8
74C164	14	7
74LS175	16	8
74C193	16	8
74LS197	14	7
CD4011	7	14

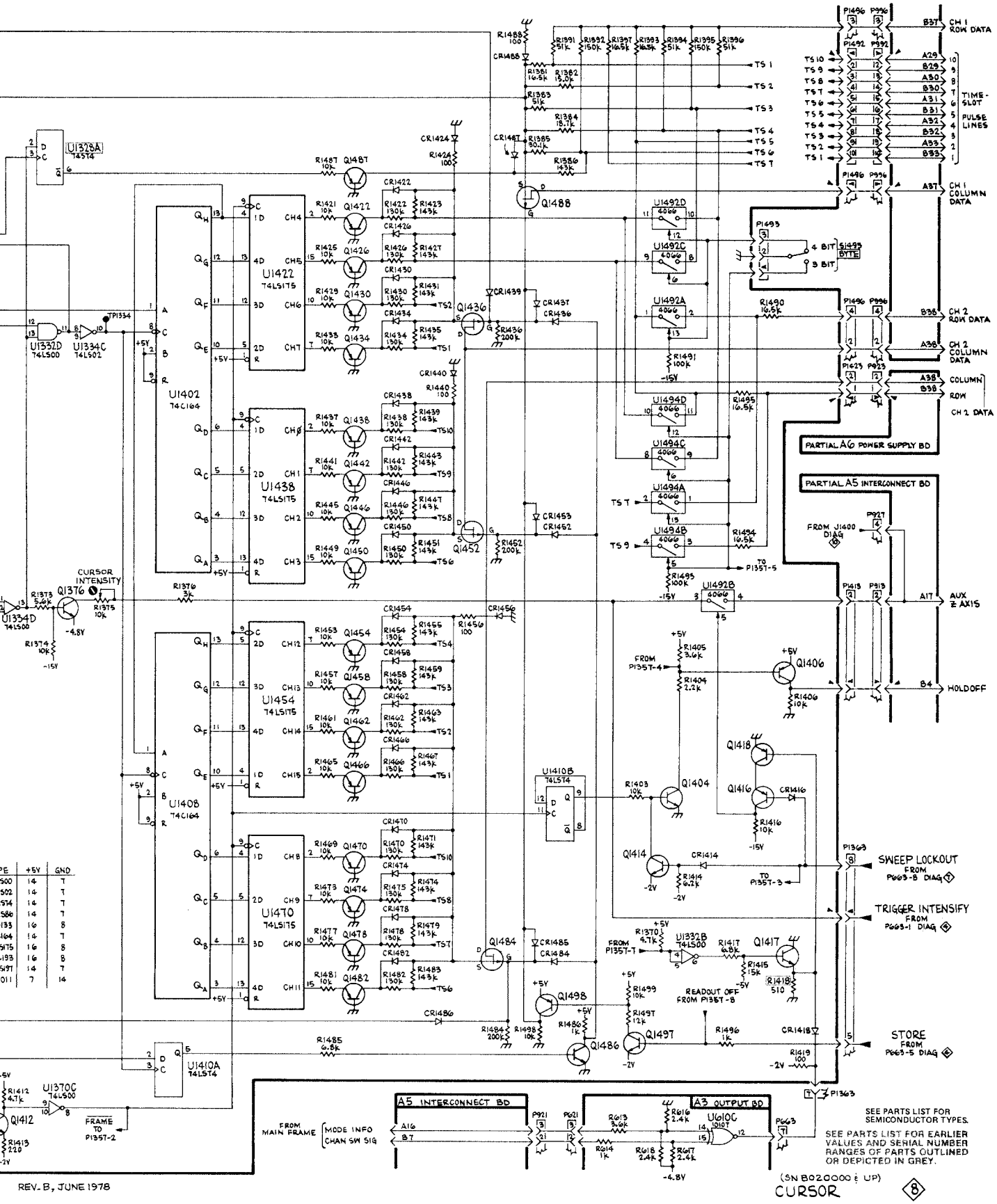

REV. B, JUNE 1978

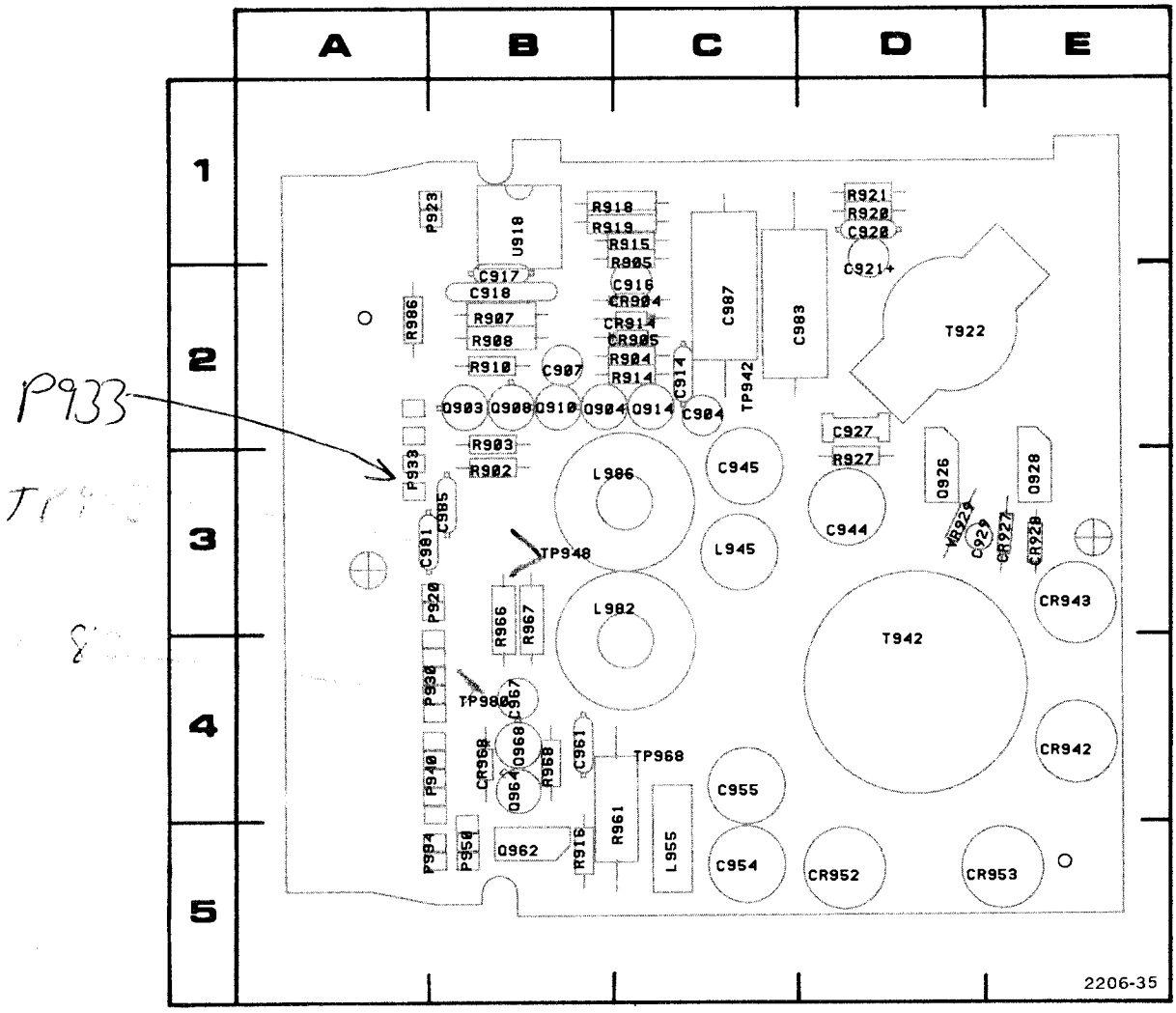

Figure 8-18. A6—Power Supply circuit board component locations.

CKT NO	GRID COORD	CKT NO	GRID COORD	CKT NO	GRID COORD	CKT NO	GRID COORD	CKT NO	GRID COORD
C904	2C	C985	3B	P920	3B	Q968	4B	R961	4C
C907	2B	C987	2C	P923	1B			R966	3B
C914	2C			P930	4B	R902	3B	R967	3B
C916	2C	CR904	2C	P933	3A	R903	2B	R968	4B
C917	2B	CR905	2C	P940	4B	R904	2C	R986	2A
C918	2B	CR914	2C	P950	5B	R905	2C		
C920	1D	CR927	3E	P994	5B	R907	2B	T922	2D
C921	2D	CR928	3E			R908	2B	T942	4D
C927	3D	CR942	4E	Q903	2B	R910	2B		
C929	3D	CR943	3E	Q904	2B	R914	2C	TP942	2C
C944	3D	CR952	5D	Q908	2B	R915	1C	TP948	3B
C945	3C	CR968	4B	Q910	2B	R916	5B	TP968	4C
C953	5E			Q914	2C	R918	1C	TP980	4B
C954	5C	L945	3C	Q926	3D	R919	1C		
C955	4C	L955	5C	Q928	3E	R920	1D	U918	1B
C961	4B	L982	4C	Q962	5B	R921	1D		
C967	4B	L986	3C	Q964	4B	R927	3D	VR929	3D
C981	3A								
C983	2C								

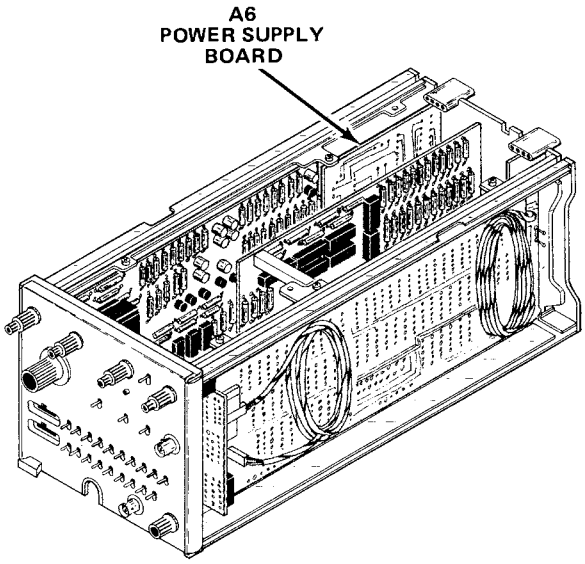

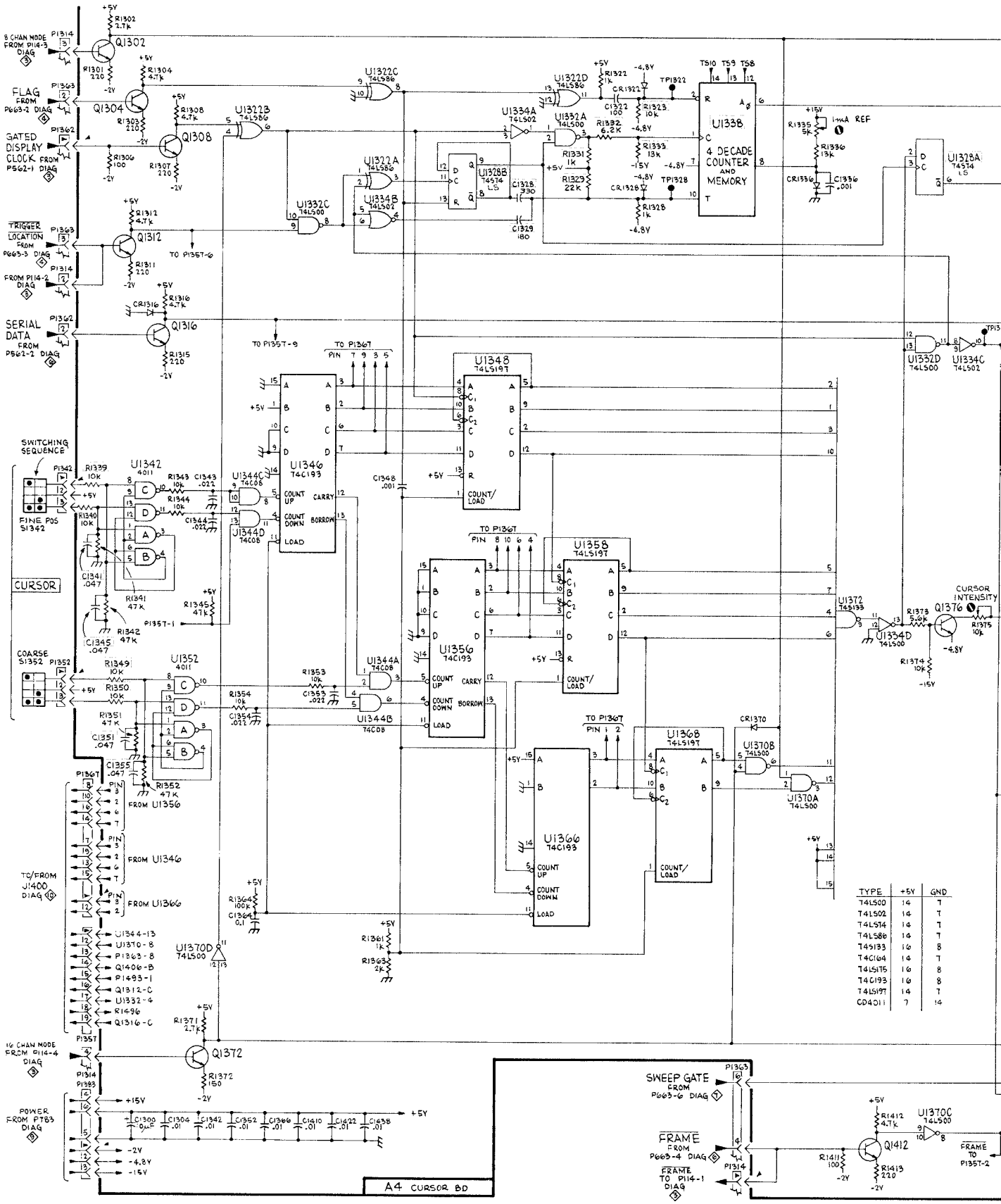

TYPE	+5V	GND
74LS00	14	7
74LS02	14	7
74LS74	14	7
74LS86	14	7
74S133	16	8
74C164	14	7
74LS175	16	8
74C193	16	8
74LS197	14	7
CD4011	7	14

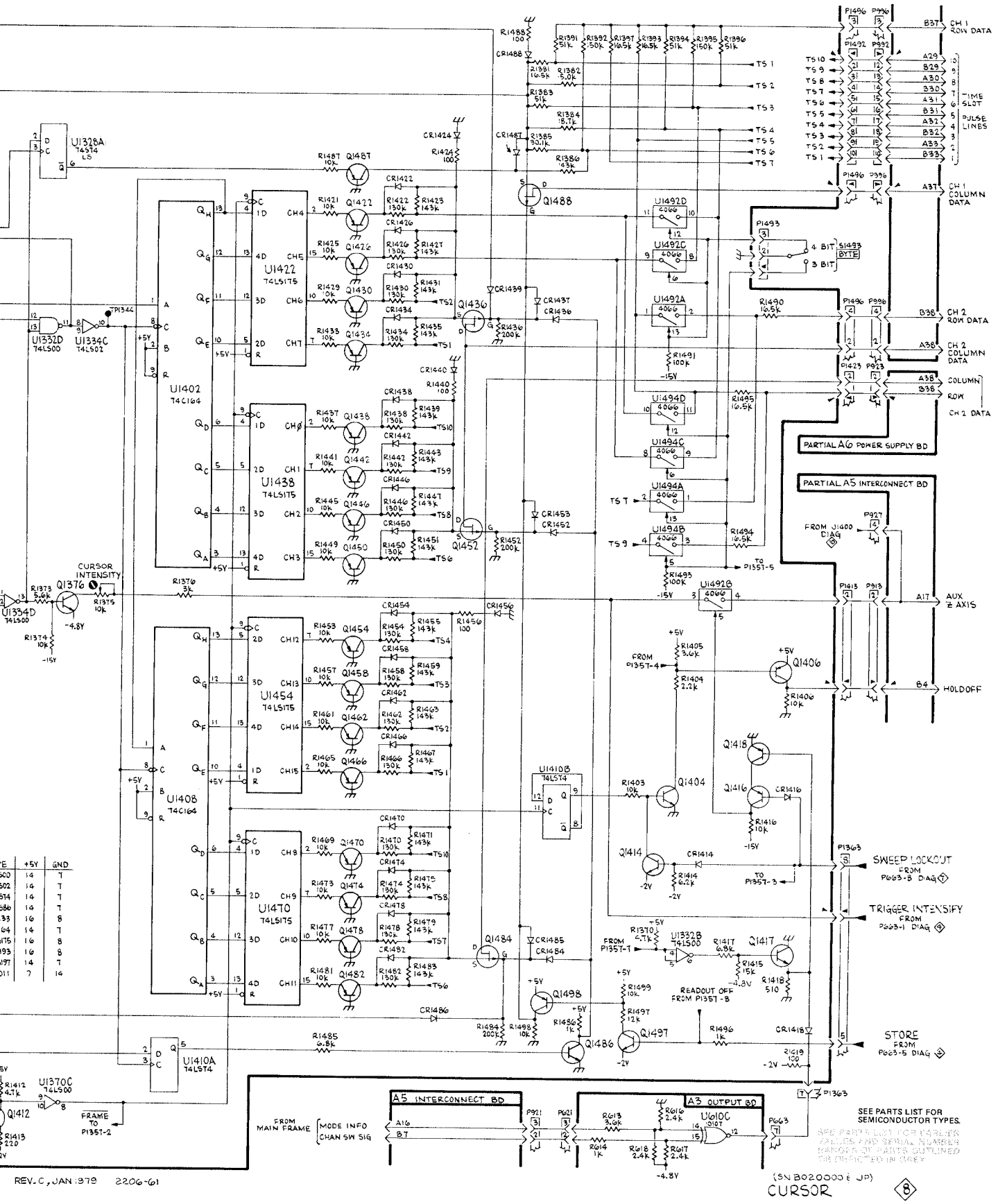
U1328A 74S74 LS
U1332D 74LS00
U1334C 74LS02
U1354D 74LS00
U1370C 74LS00
U1402 74C164
U1408 74C164
U1410A 74LS74
U1410B 74LS74
U1422 74LS175
U1438 74LS175
U1454 74LS175
U1470 74LS175
U1332B 74LS00
U1492A 4066
U1492B 4066
U1492C 4066
U1492D 4066
U1494A 4066
U1494B 4066
U1494C 4066
U1494D 4066
U6010C 2107
CURSOR INTENSITY
CH 1 ROW DATA
CH 1 COLUMN DATA
CH 2 ROW DATA
CH 2 COLUMN DATA
COLUMN
ROW
CH 2 DATA
TIME SLOT
PULSE LINES
4 BIT
3 BIT
S1493 BYTE
PARTIAL A6 POWER SUPPLY BD
PARTIAL A5 INTERCONNECT BD
FROM U1400 DIAG 19
AUX Z AXIS
HOLDOFF
SWEEP LOCKOUT FROM P663-8 DIAG 7
TRIGGER INTENSIFY FROM P663-1 DIAG 4
STORE FROM P663-5 DIAG 3
READOUT OFF FROM P135T-8
FROM P135T-4
FROM P135T-1
TO P135T-3
TO P135T-5
FRAME TO P135T-2
FROM MAIN FRAME
MODE INFO
CHAN SW SIG
A5 INTERCONNECT BD
A3 OUTPUT BD
SEE PARTS LIST FOR SEMICONDUCTOR TYPES.
REV-C, JAN 1979 2206-61
(SN B020000 & UP)
CURSOR
8

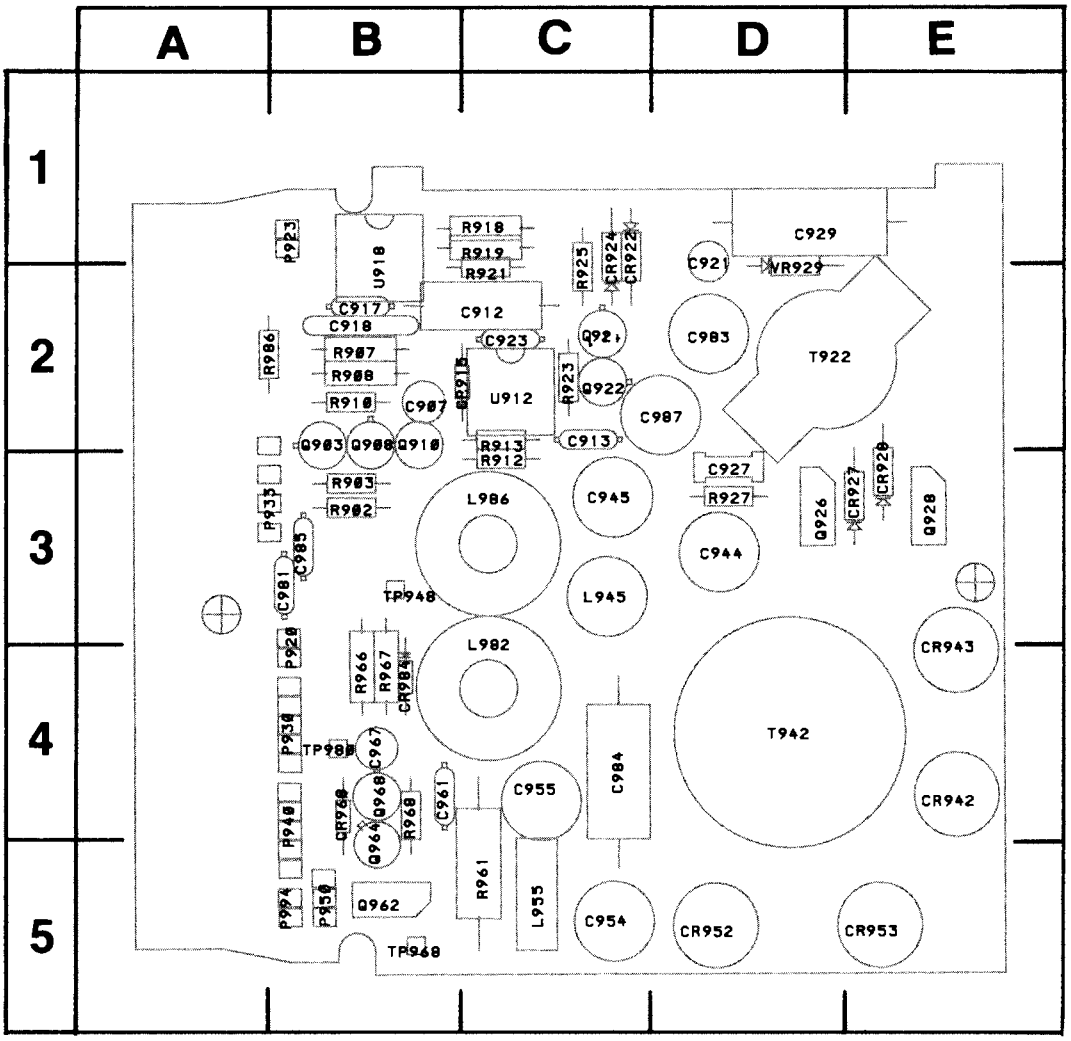

Figure 8-18A. A6—Power Supply circuit board component locations.(SN B070000 & up).

CKT NO	GRID LOC	CKT NO	GRID LOC	CKT NO	GRID LOC	CKT NO	GRID LOC
C907	2B	CR915	2C	Q903	2B	R925	2C
C912	2C	CR922	2C	Q908	2B	R927	3D
C913	2C	CR924	2C	Q910	2B	R961	4C
C917	2B	CR927	3E	Q922	2C	R966	4B
C918	2B	CR928	3E	Q924		R967	4B
C921	2D	CR942	4E	Q926	3D	R968	4B
C923	2C	CR943	3E	Q928	3E	R986	2A
C927	3D	CR952	5D	Q962	5B		
C929	1D	CR968	4B	Q964	4B	T922	2D
C944	3D	CR984	4B	Q968	4B	T942	4D
C945	3C						
		L945	3C	R902	3B	TP942	2C
C954	5C	L955	5C	R903	3B	TP948	3B
C955	4C	L982	4C	R907	2B	TP968	5B
C961	4B	L986	3C	R908	2B	TP980	4B
C967	4B			R910	2B		
C981	3B	P920	3B	R912	2C	U912	2C
C983	2D	P923	1B	R913	2C	U918	1B
C984	4C	P930	4B	R918	1C		
C985	3B	P933	3A	R919	1C	VR929	2D
C987	2C	P940	4B	R921	1D		
		P950	5B	R923	2C		
		P994	5B				

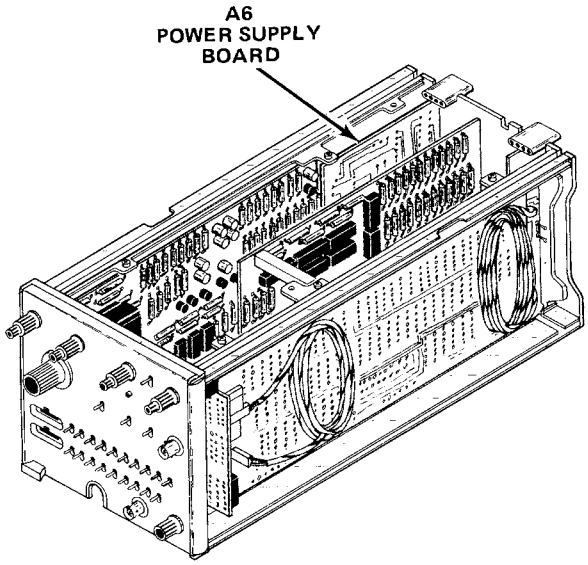

@

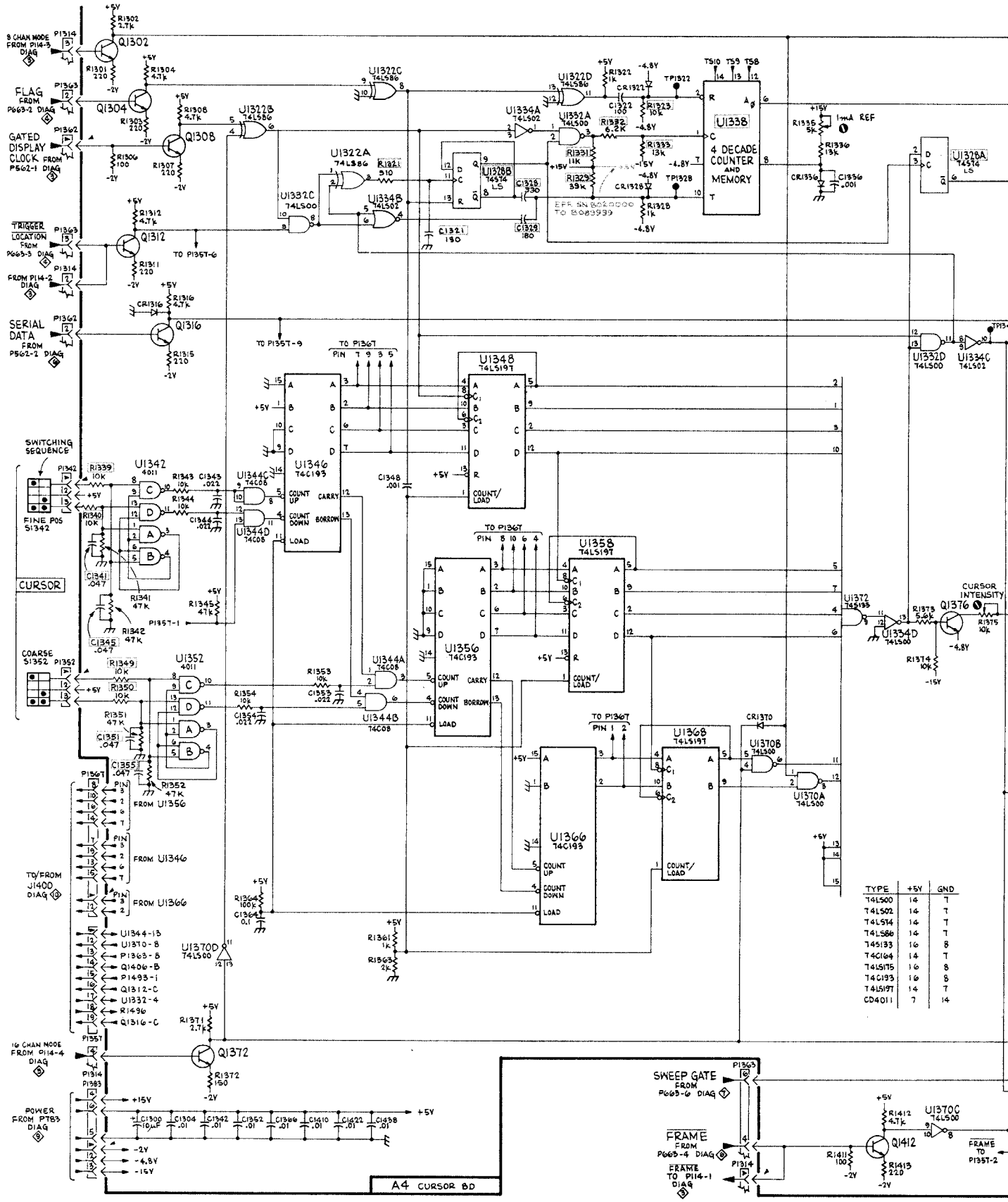

7D01

REV D FEB 1980 2

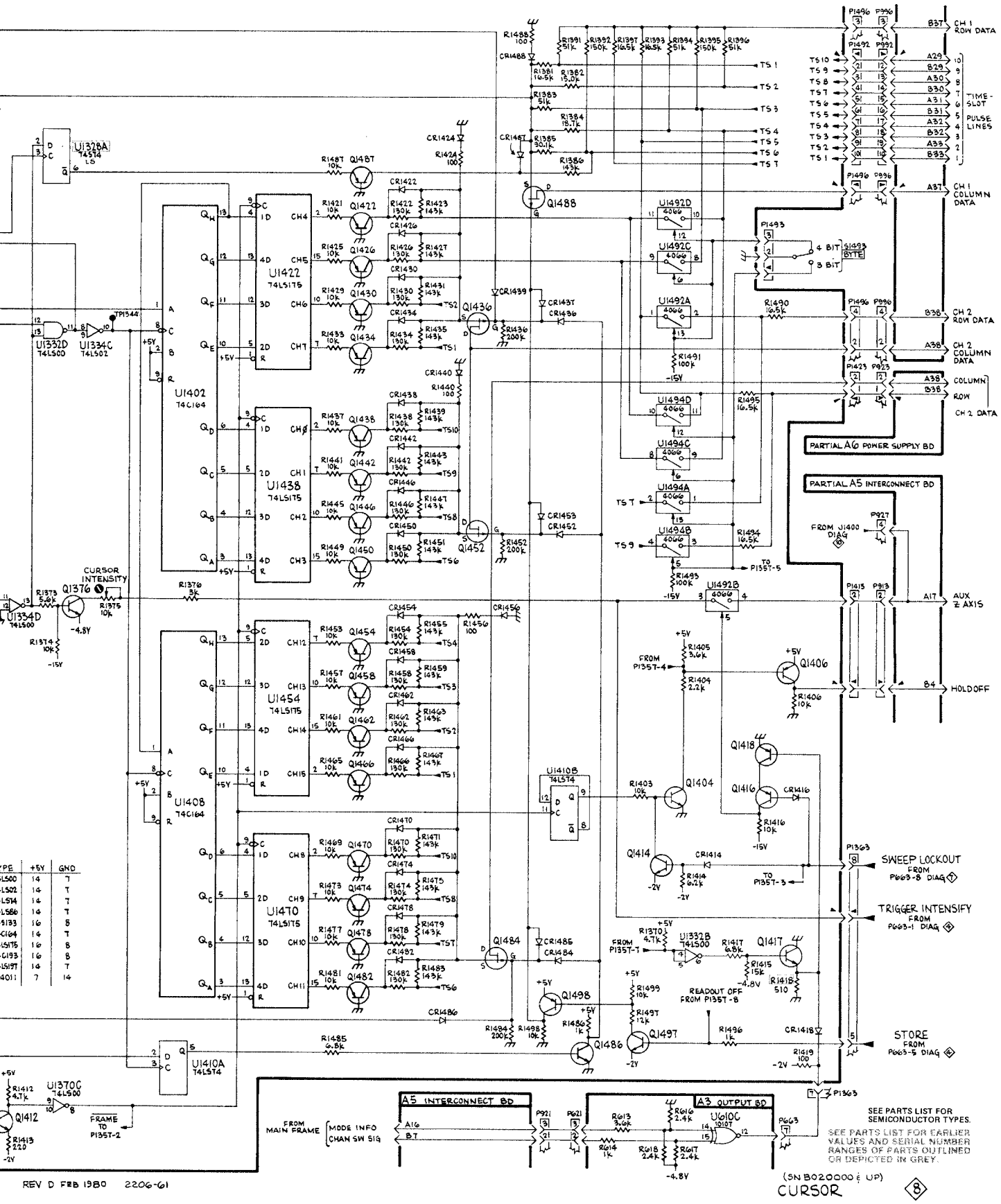
U1328A 74S74 LS
U1332D 74LS00
U1334C 74LS02
U1334D 74LS00
U1402 74C164
U1408 74C164
U1410A 74LS74
U1370C 74LS00
U1422 74LS175
U1438 74LS175
U1454 74LS175
U1470 74LS175
U1410B 74LS74
U1492D 4066
U1492C 4066
U1492A 4066
U1494D 4066
U1494C 4066
U1494A 4066
U1494B 4066
U1492B 4066
U1332B 74LS00
U6610C 10107
CURSOR INTENSITY
TP1344
CH 1 ROW DATA
CH 1 COLUMN DATA
CH 2 ROW DATA
CH 2 COLUMN DATA
COLUMN
ROW
CH 2 DATA
TIME-SLOT PULSE LINES
4 BIT
3 BIT
S1493 BYTE
PARTIAL A6 POWER SUPPLY BD
PARTIAL A5 INTERCONNECT BD
FROM U1400 DIAG
AUX Z AXIS
HOLDOFF
SWEEP LOCKOUT FROM P663-8 DIAG
TRIGGER INTENSIFY FROM P663-1 DIAG
STORE FROM P663-5 DIAG
READOUT OFF FROM P135T-8
FROM P135T-4
FROM P135T-7
TO P135T-5
TO P135T-3
FRAME TO P135T-2
FROM MAIN FRAME
MODE INFO
CHAN SW SIG
A5 INTERCONNECT BD
A3 OUTPUT BD
SEE PARTS LIST FOR SEMICONDUCTOR TYPES.
SEE PARTS LIST FOR EARLIER VALUES AND SERIAL NUMBER RANGES OF PARTS OUTLINED OR DEPICTED IN GREY.
REV D FEB 1980 2206-61
(SN B020000 & UP)
CURSOR

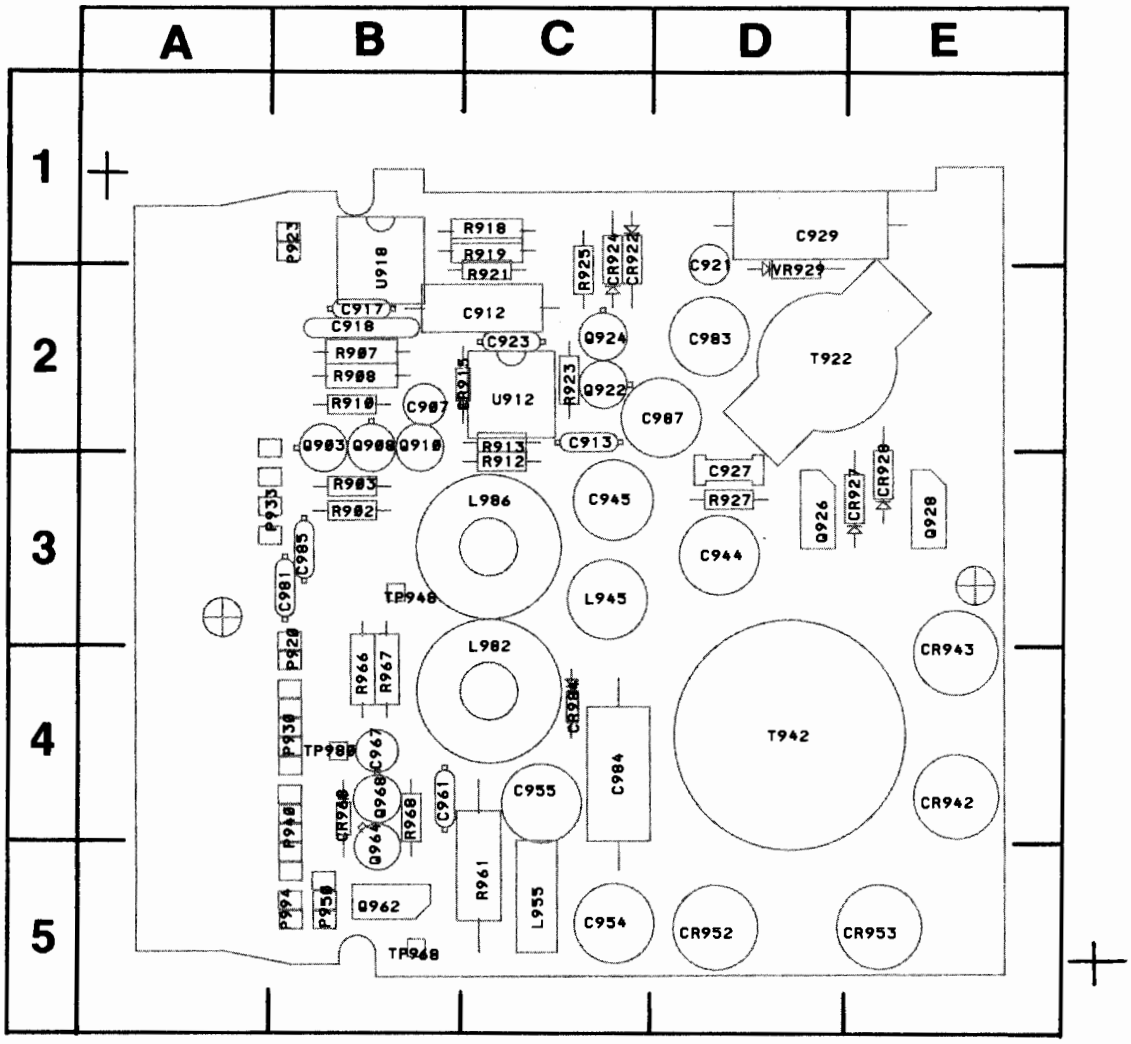

Figure 8-18A. A6—Power Supply circuit board component locations.(SN B070000 & up).

SN B070000 & up

CKT NO	GRID LOC	CKT NO	GRID LOC	CKT NO	GRID LOC	CKT NO	GRID LOC
C907	2B	CR915	2C	P940	4B	R913	2C
C912	2C	CR922	2C	P950	5B	R918	1C
C913	2C	CR924	2C	P994	5B	R919	1C
C917	2B	CR927	3E			R921	1D
C918	2B	CR928	3E	Q903	2B	R923	2C
C921	2D	CR942	4E	Q908	2B	R925	2C
C923	2C	CR943	3E	Q910	2B	R927	3D
C927	3D	CR952	5D	Q922	2C	R961	4C
C929	1D	CR953	5E	Q924	2C	R966	4B
C944	3D	CR968	4B	Q926	3D	R967	4B
C945	3C	CR984	4C	Q928	3E	R968	4B
				Q962	5B		
C954	5C	L945	3C	Q964	4B	T922	2D
C955	4C	L955	5C	Q968	4B	T942	4D
C961	4B	L982	4C				
C967	4B	L986	3C	R902	3B	TP948	3B
C981	3B			R903	3B	TP968	5B
C983	2D	P920	3B	R907	2B	TP980	4B
C984	4C	P923	1B	R908	2B		
C985	3B	P930	4B	R910	2B	U912	2C
C987	2C	P933	3A	R912	2C	U918	1B
						VR929	2D

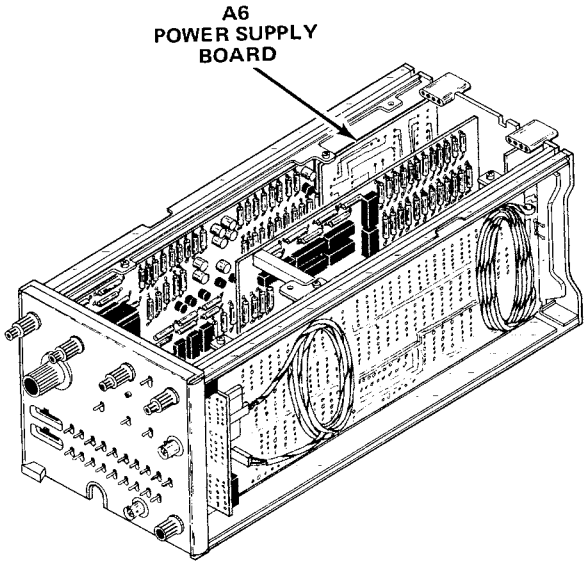

VOLTAGE AND WAVEFORM CONDITIONS

Voltages and Waveforms shown are typical, but may vary between instruments.

TEST SETUP: The 7D01 is connected to the 7000-series mainfram through two 067-0616-00 Flexible Plug-in Extenders.

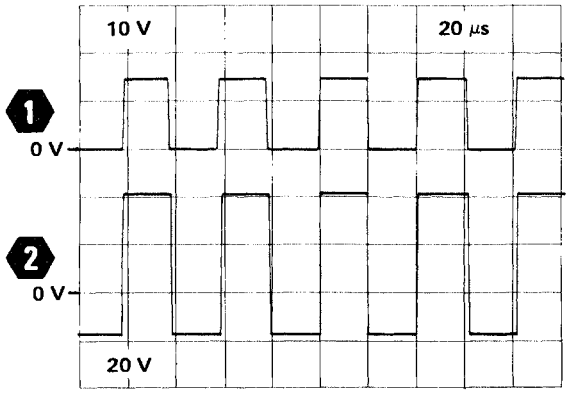

VOLTAGE & WAVEFORM CONDITIONS

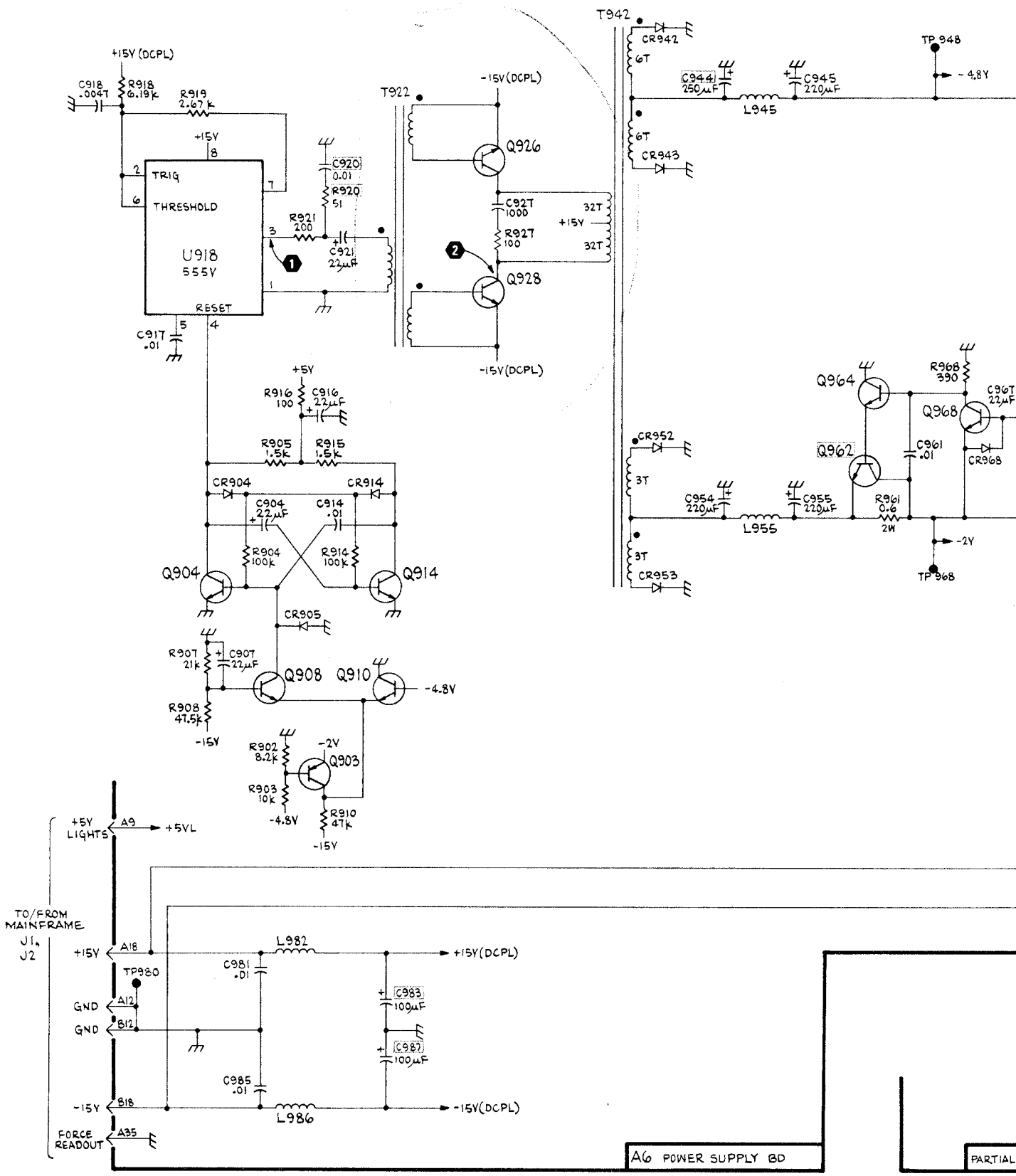

7D01

REV. A, MAR

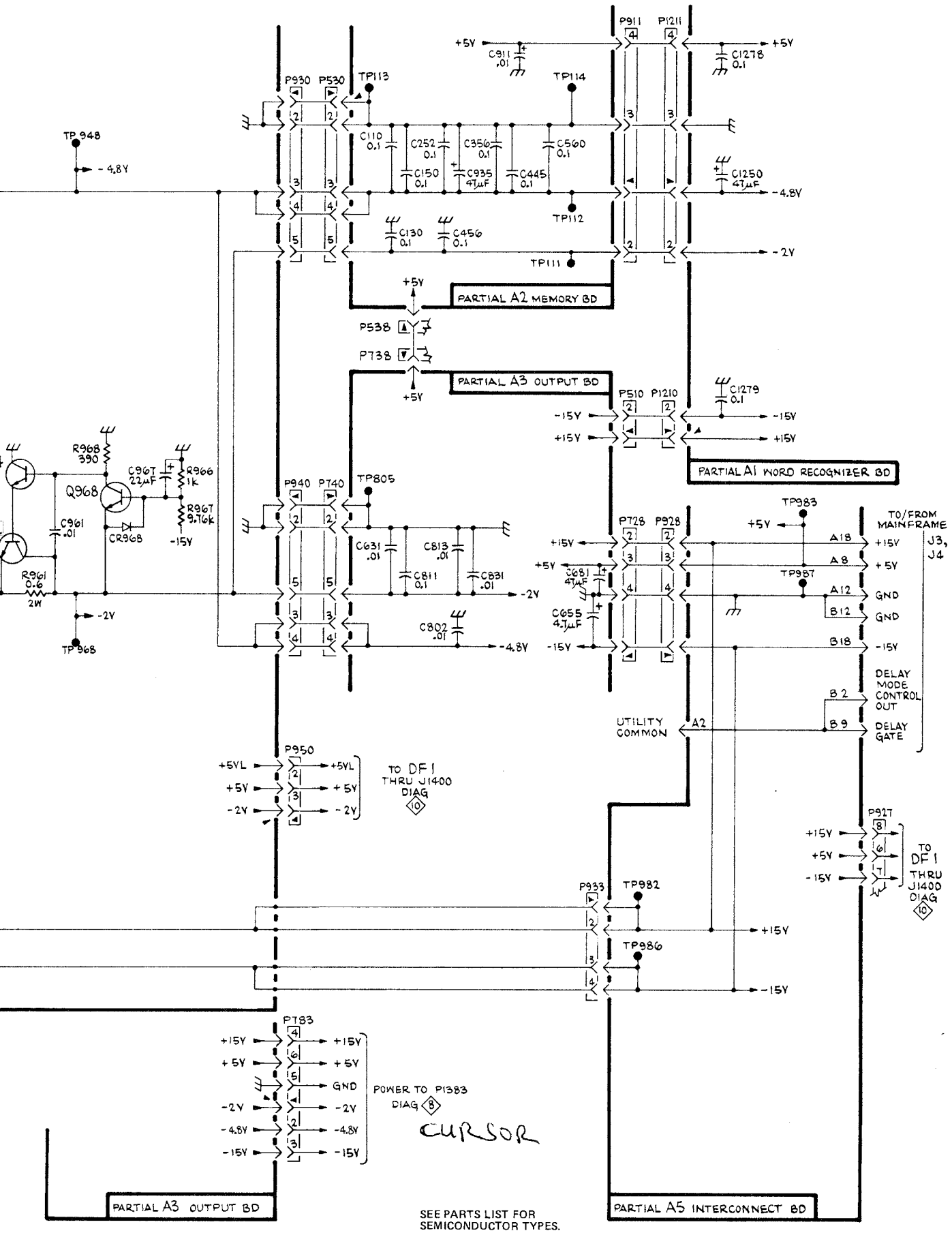

SEE PARTS LIST FOR SEMICONDUCTOR TYPES.

SEE PARTS LIST FOR EARLIER VALUES AND SERIAL NUMBER RANGES OF PARTS OUTLINED OR DEPICTED IN GREY.

(SN B020000 & UP)

POWER SUPPLY

9

REV. A, MAR 77

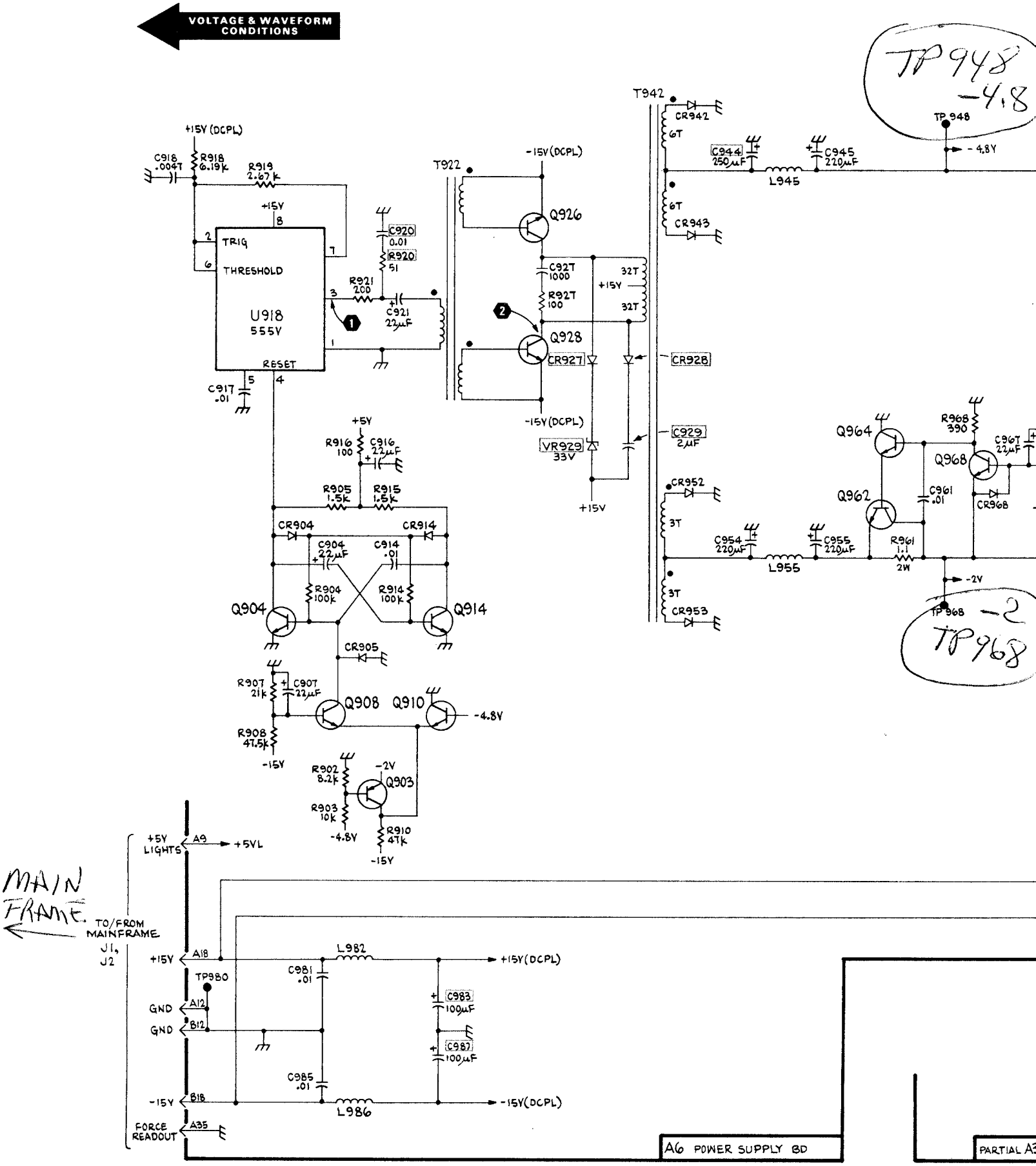

7D01

REV. B, JUNE 19

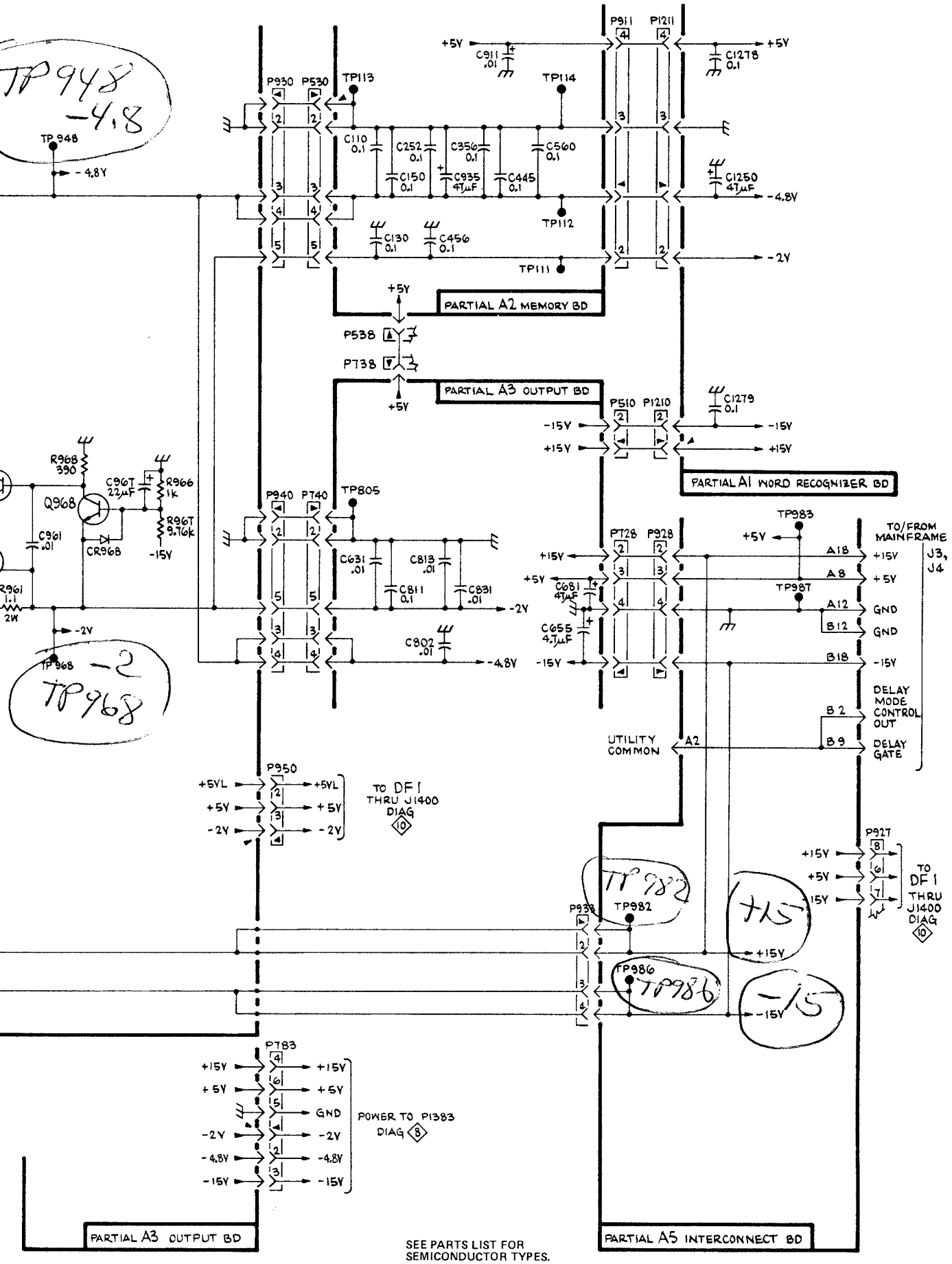

SEE PARTS LIST FOR SEMICONDUCTOR TYPES.

SEE PARTS LIST FOR EARLIER VALUES AND SERIAL NUMBER RANGES OF PARTS OUTLINED OR DEPICTED IN GREY.

REV. B, JUNE 1978

(SN B020000 & UP)
POWER SUPPLY

9

POWER SUPPLY

6

VOLTAGE & WAVEFORM CONDITIONS

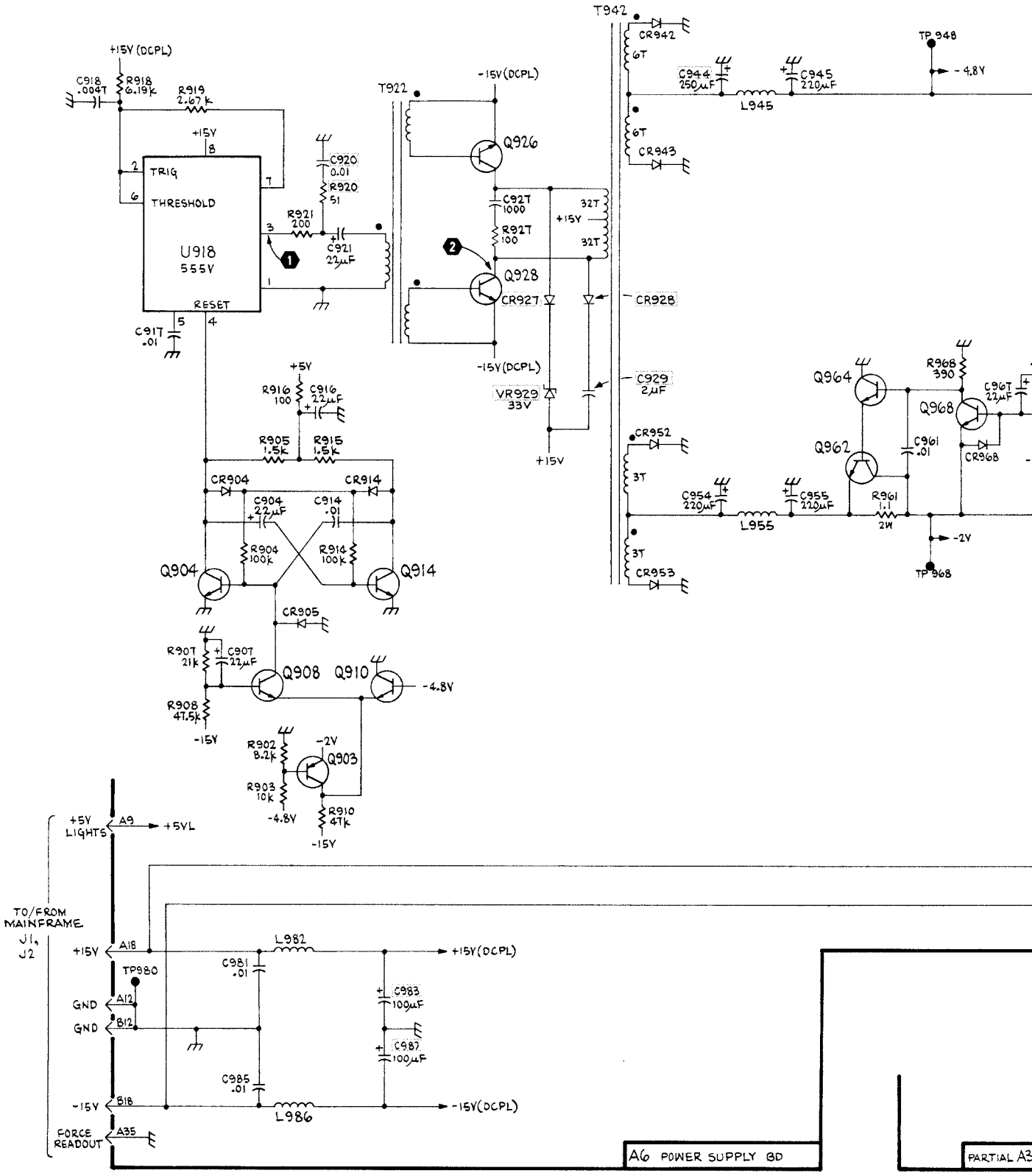

2206-03
REV. C, JAN 19

7D01

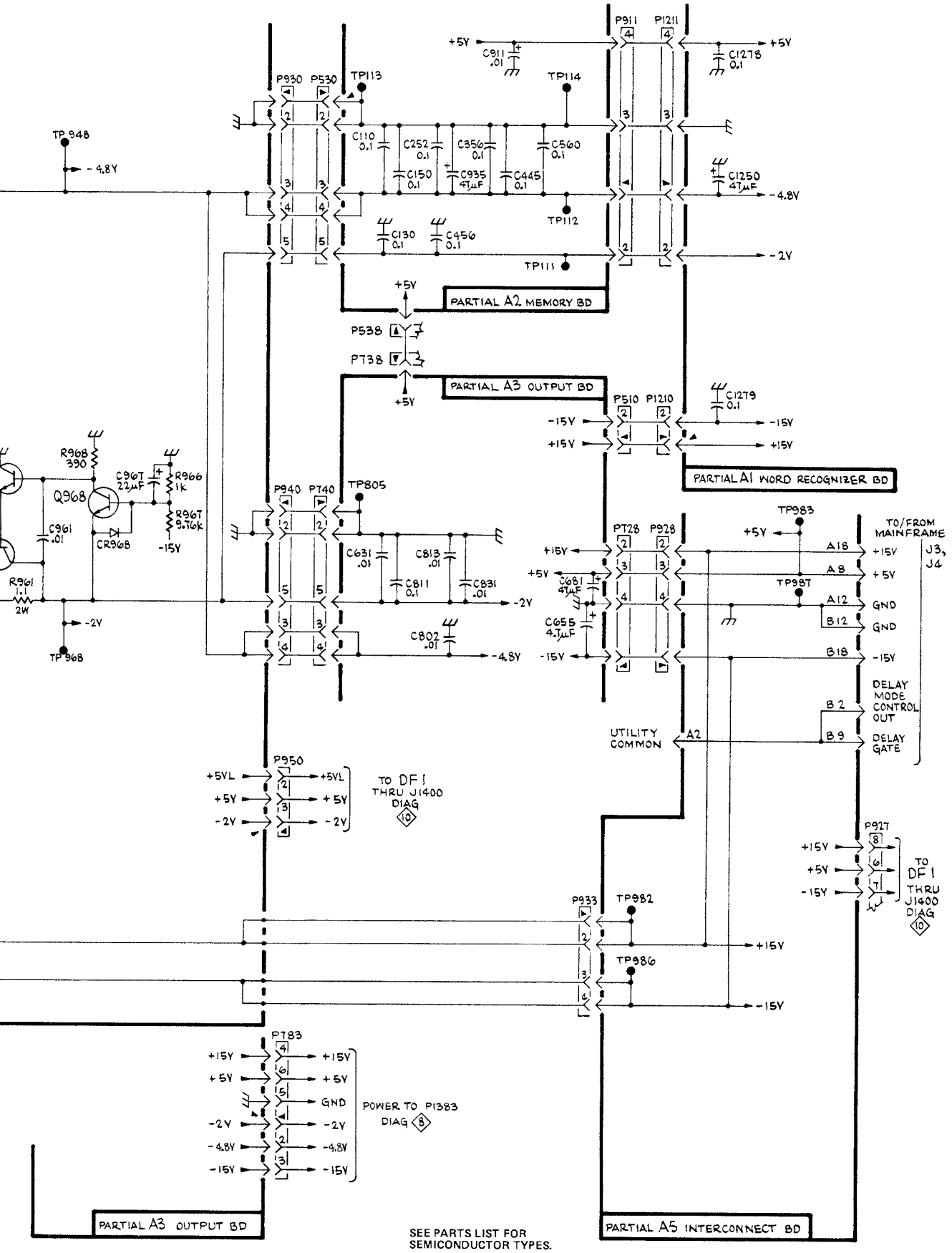

SEE PARTS LIST FOR SEMICONDUCTOR TYPES.

SEE PARTS LIST FOR EARLIER VALUES AND SERIAL NUMBER RANGES OF PARTS OUTLINED OR DEPICTED IN GREY.

2206-63
REV. C, JAN 1979

(SN B020000 – B069999)
POWER SUPPLY 9

POWER SUPPLY
(SN B020000 – B069999) 9

VOLTAGE & WAVEFORM CONDITIONS

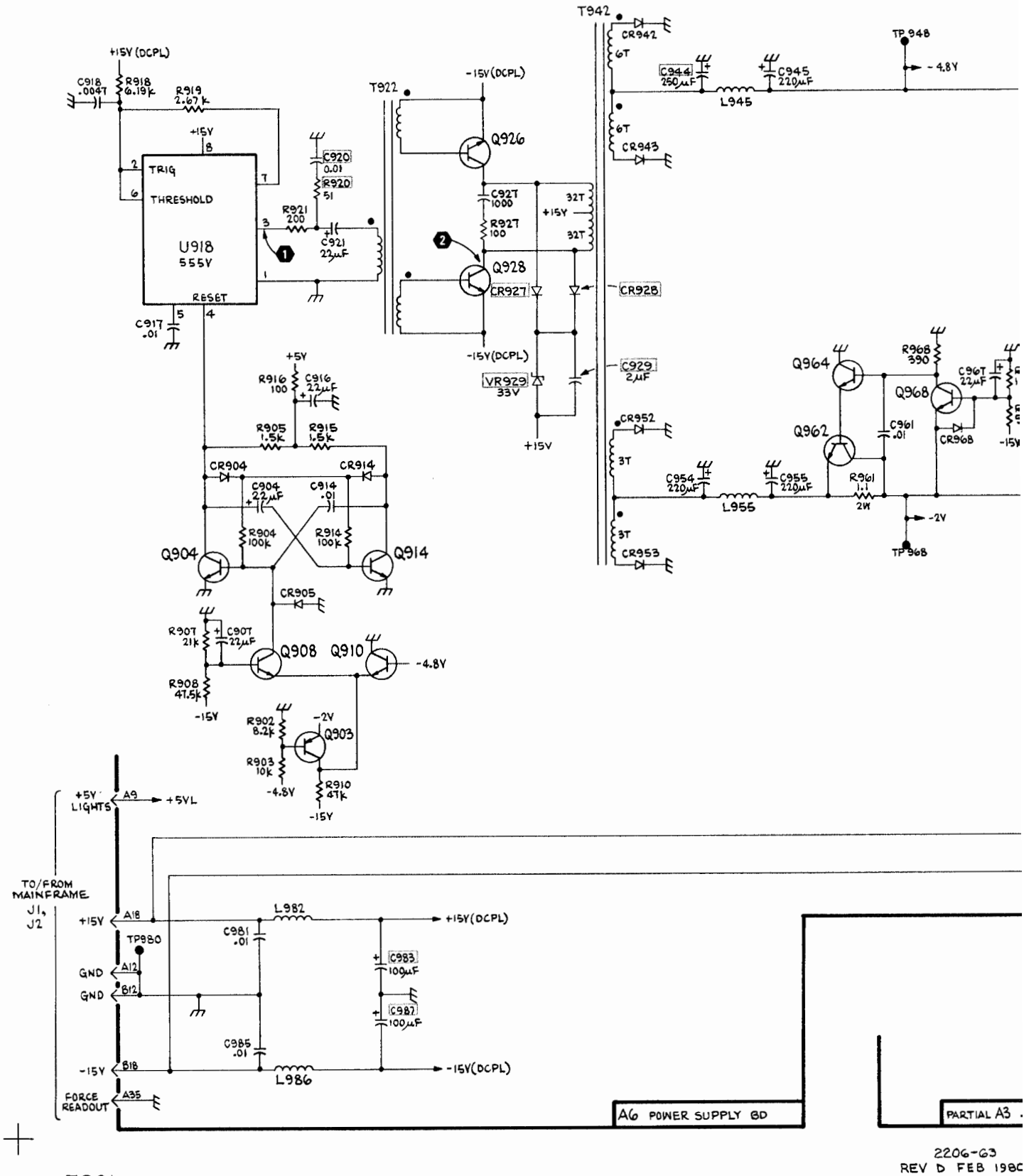

2206-G3
REV D FEB 1980

7D01

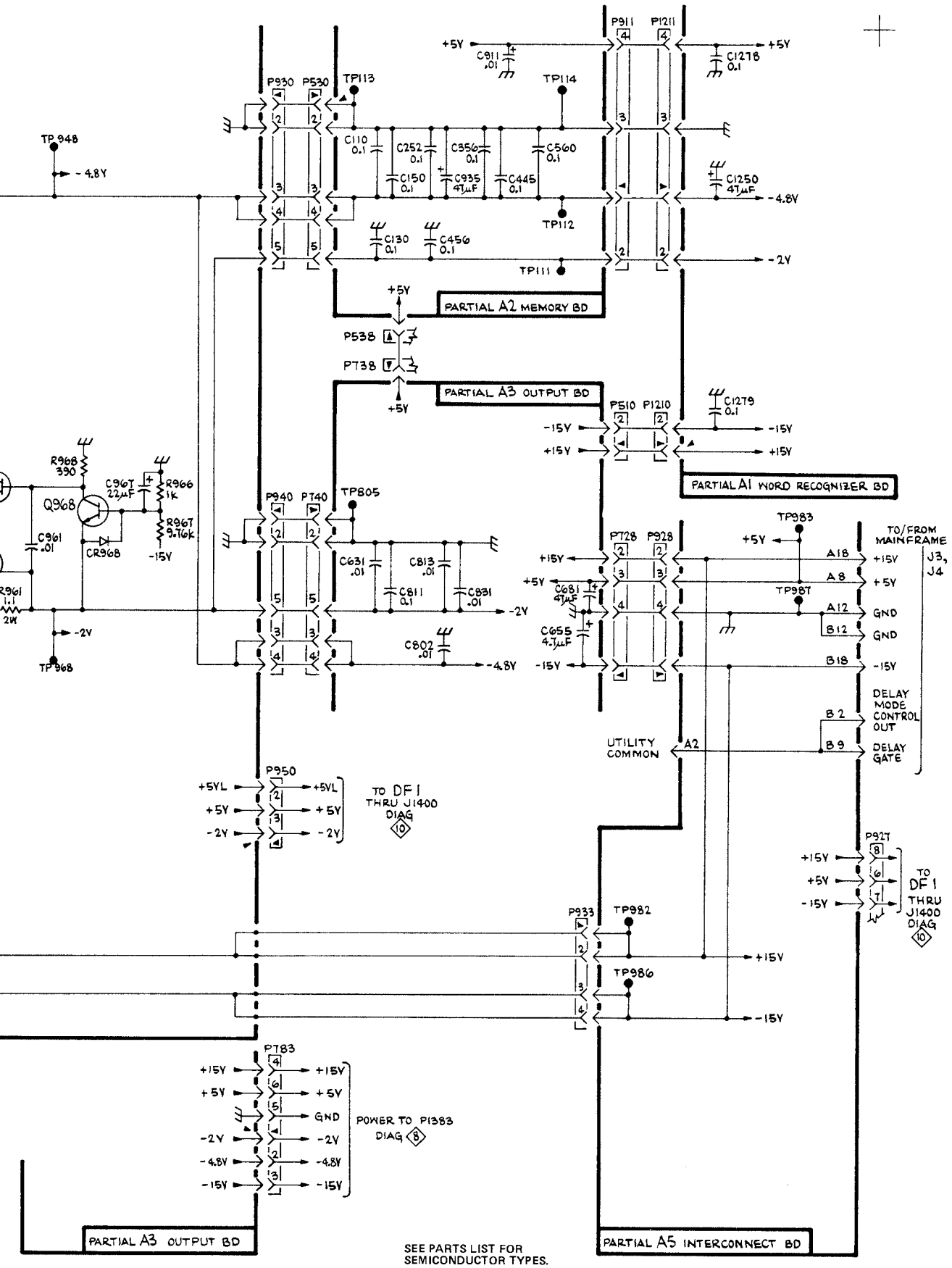

SEE PARTS LIST FOR SEMICONDUCTOR TYPES.

SEE PARTS LIST FOR EARLIER VALUES AND SERIAL NUMBER RANGES OF PARTS OUTLINED OR DEPICTED IN GREY.

2206-63
REV D FEB 1980

(SN B020000 – B069999)
POWER SUPPLY 9

POWER SUPPLY
(SN B020000 – B069999) 9

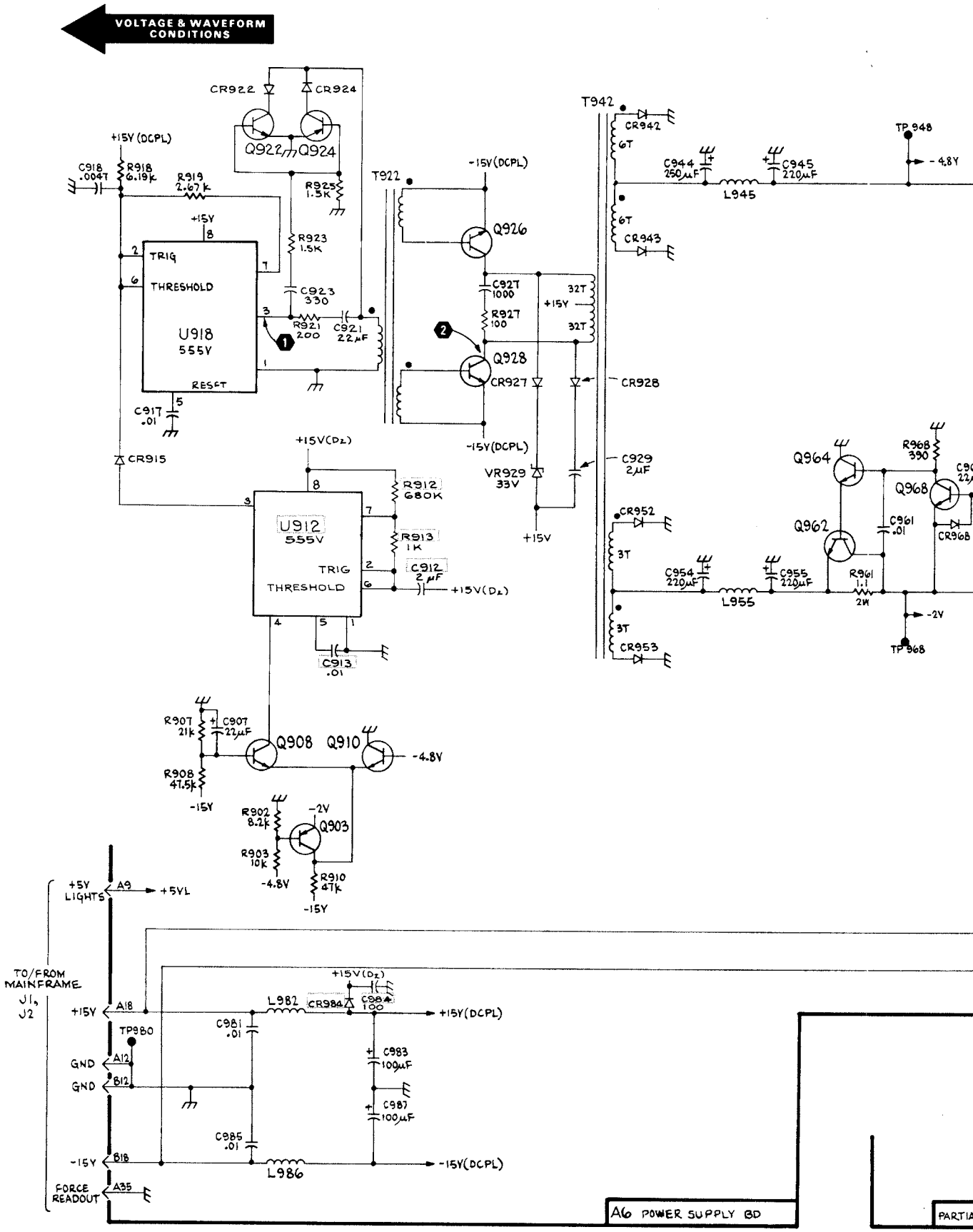
VOLTAGE & WAVEFORM CONDITIONS
CR922
CR924
Q922
Q924
+15V (DCPL)
C918 .0047
R918 6.19k
R919 2.67k
R925 1.5K
+15V
TRIG
THRESHOLD
U918 555V
RESET
R923 1.5K
C923 330
R921 200
C921 22µF
C917 .01
CR915
T922
-15V(DCPL)
Q926
C927 1000
R927 100
Q928
CR927
VR929 33V
+15V
32T
CR928
T942
CR942
6T
CR943
C944 250µF
L945
C945 220µF
TP948
-4.8V
C929 2µF
+15V(Dz)
U912 555V
TRIG
THRESHOLD
R912 680K
R913 1K
C912 2µF
C913 .01
CR952
3T
CR953
C954 220µF
L955
C955 220µF
R961 1.1 2W
-2V
TP968
Q964
Q962
Q968
R968 390
C961 .01
CR968
R907 21k
C907 22µF
Q908
Q910
R908 47.5k
-15V
R902 8.2k
Q903
R903 10k
R910 47k
+5V LIGHTS
A9
+5VL
TO/FROM MAINFRAME J1, J2
+15V
A18
TP980
GND
A12
B12
-15V
B18
FORCE READOUT
A35
L982
CR984
C984 100
+15V(DCPL)
C981 .01
C983 100µF
C987 100µF
C985 .01
L986
-15V(DCPL)
A6 POWER SUPPLY BD
PARTIA

7D01

2203-62

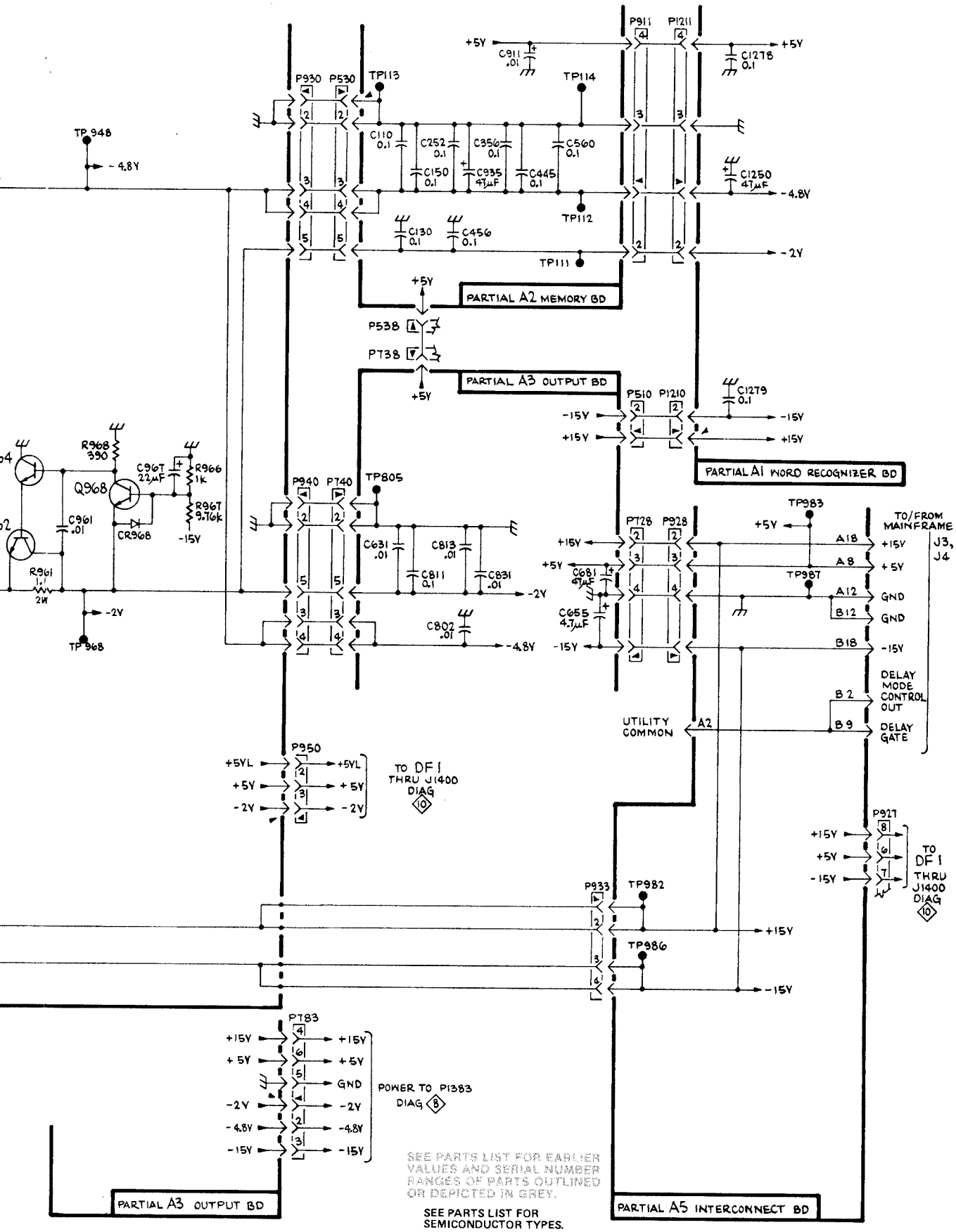

(SN B070000 & UP)
POWER SUPPLY

9

2206-62

POWER SUPPLY (SN B070000 & UP)

9

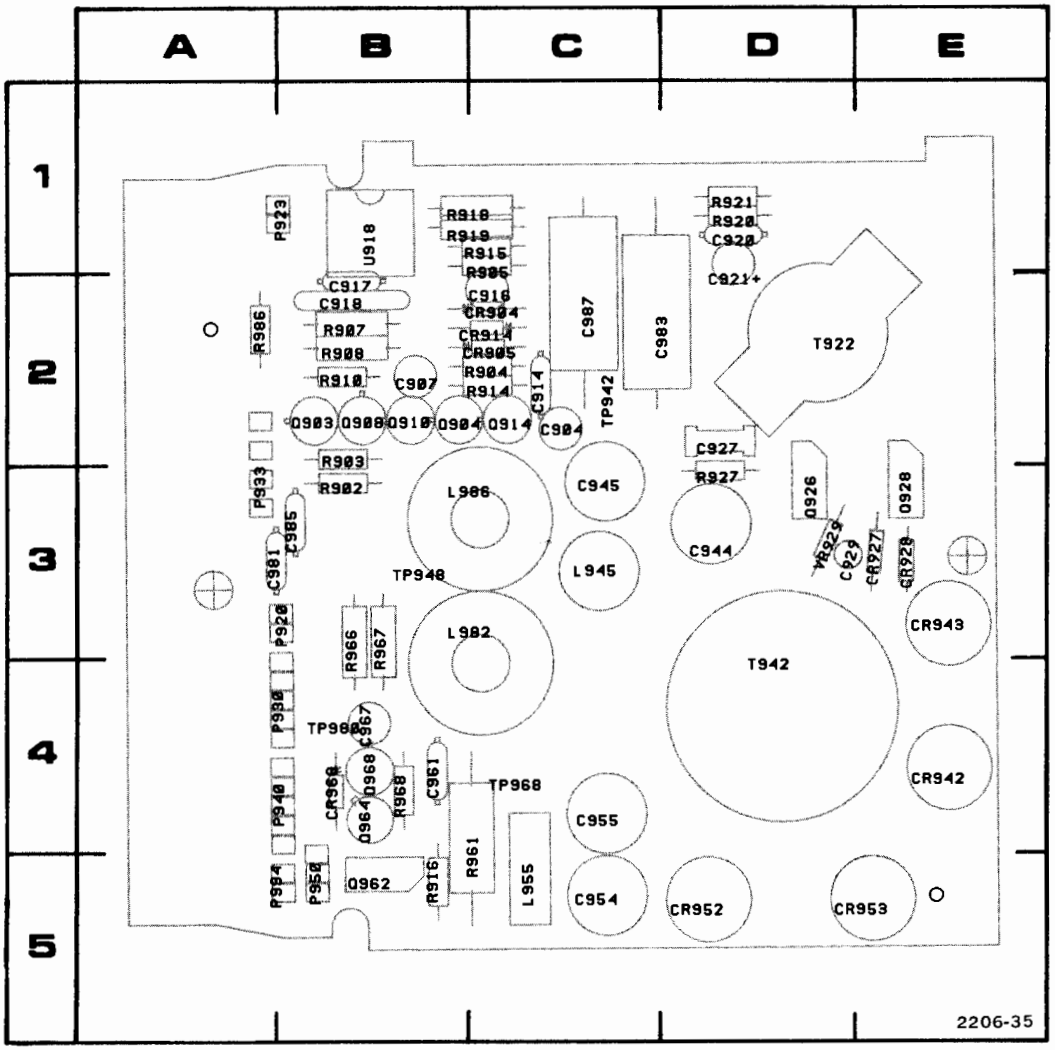

Figure 8-18B. A6—Power Supply circuit board component locations (SN B020000 — B069999).

SN B020000 — B069999

CKT NO	GRID COORD	CKT NO	GRID COORD	CKT NO	GRID COORD	CKT NO	GRID COORD	CKT NO	GRID COORD
C904	2C	C985	3B	P920	3B	Q968	4B	R961	4C
C907	2B	C987	2C	P923	1B			R966	3B
C914	2C			P930	4B	R902	3B	R967	3B
C916	2C	CR904	2C	P933	3A	R903	2B	R968	4B
C917	2B	CR905	2C	P940	4B	R904	2C	R986	2A
C918	2B	CR914	2C	P950	5B	R905	2C		
C920	1D	CR927	3E	P994	5B	R907	2B	T922	2D
C921	2D	CR928	3E			R908	2B	T942	4D
C927	3D	CR942	4E	Q903	2B	R910	2B		
C929	3D	CR943	3E	Q904	2B	R914	2C	TP942	2C
C944	3D	CR952	5D	Q908	2B	R915	1C	TP948	3B
C945	3C	CR968	4B	Q910	2B	R916	5B	TP968	4C
C953	5E			Q914	2C	R918	1C	TP980	4B
C954	5C	L945	3C	Q926	3D	R919	1C		
C955	4C	L955	5C	Q928	3E	R920	1D	U918	1B
C961	4B	L982	4C	Q962	5B	R921	1D		
C967	4B	L986	3C	Q964	4B	R927	3D	VR929	3D
C981	3A								
C983	2C								

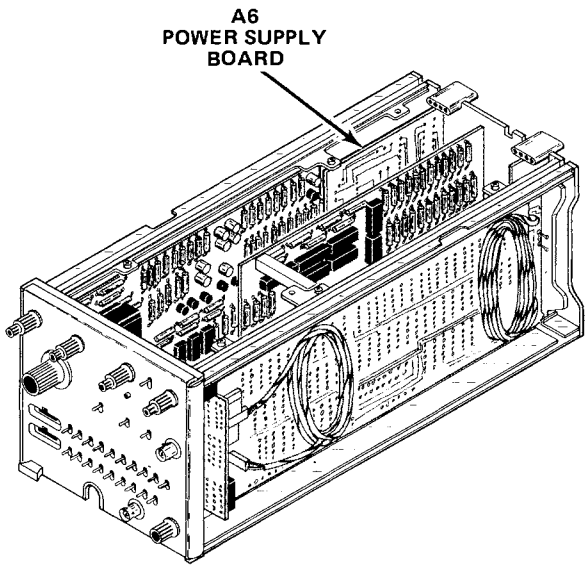

VOLTAGE & WAVEFORM CONDITIONS

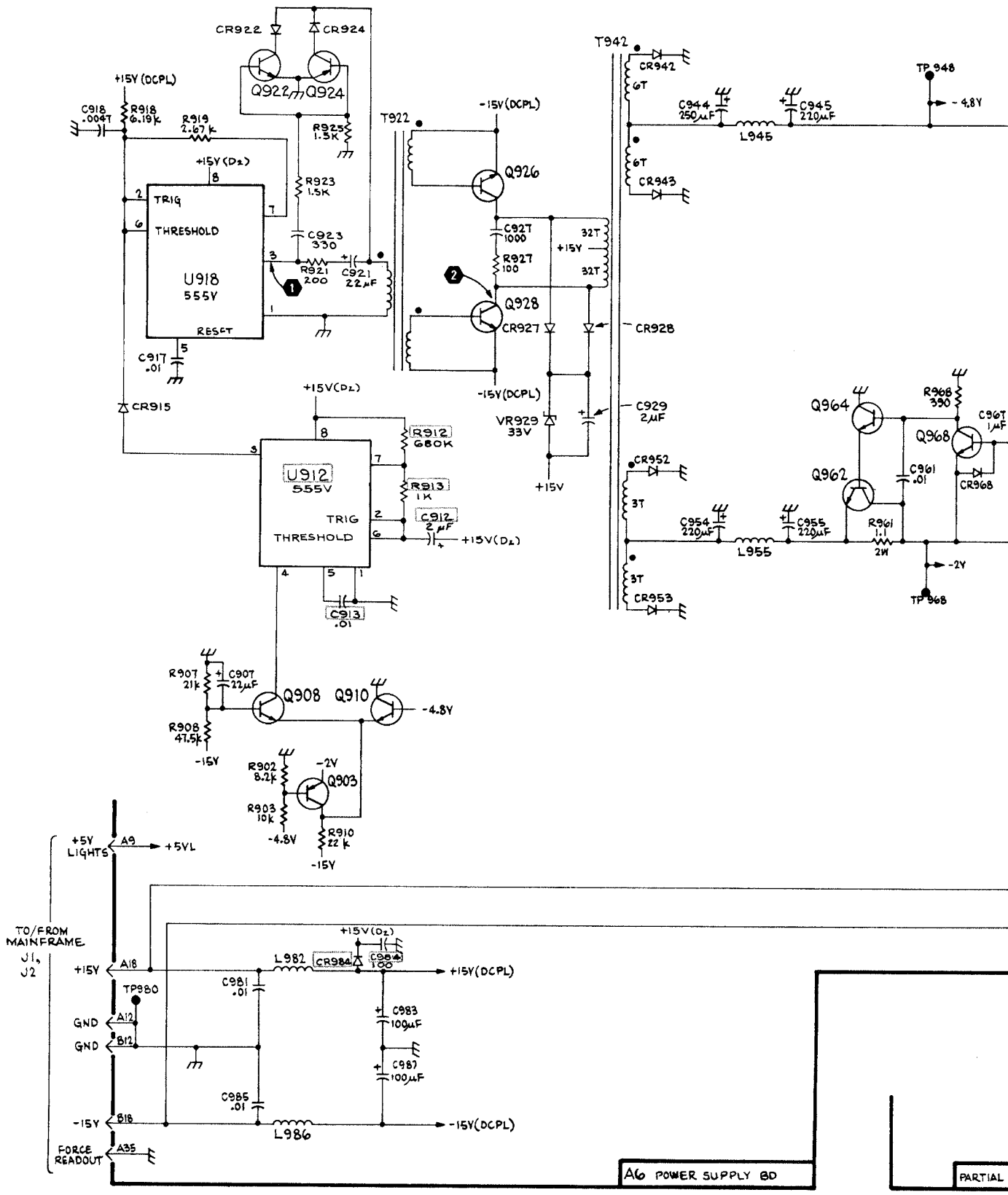

7D01

2206-62
REV A FEB 1980

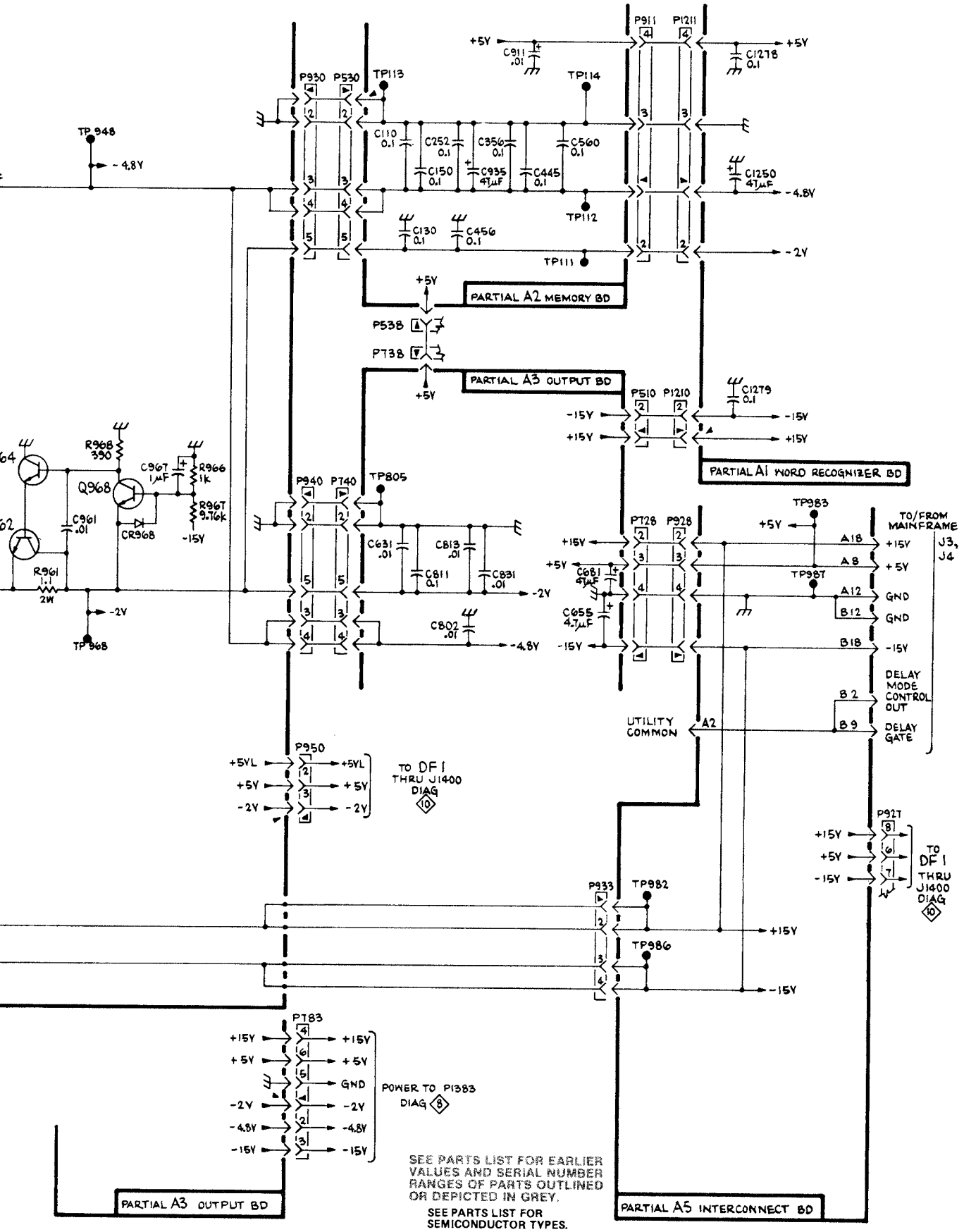

SEE PARTS LIST FOR EARLIER VALUES AND SERIAL NUMBER RANGES OF PARTS OUTLINED OR DEPICTED IN GREY.

SEE PARTS LIST FOR SEMICONDUCTOR TYPES.

(SN B070000 & UP)
POWER SUPPLY

9

2206-62
REV A FEB 1980

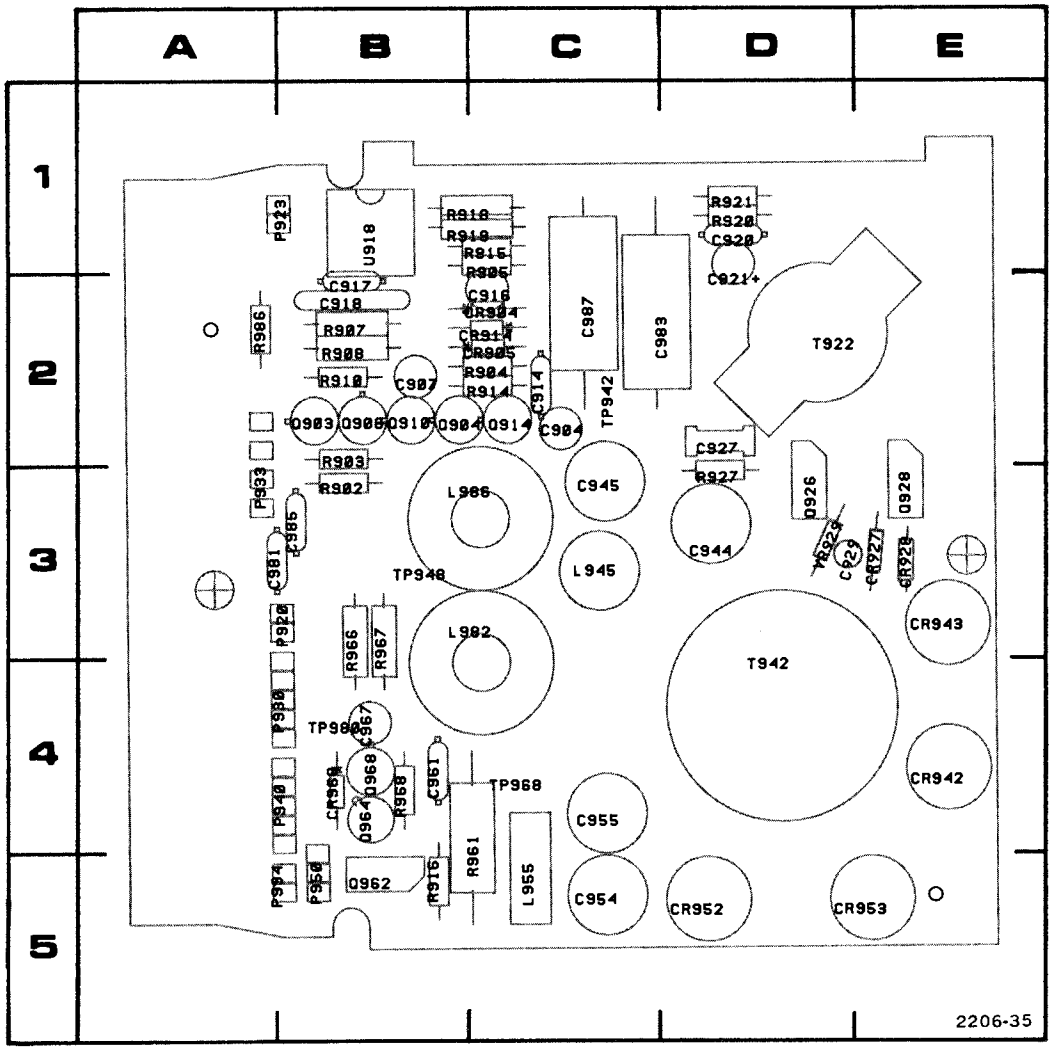

Figure 8-18B. A6—Power Supply circuit board component locations (SN B020000 — B069999).

A6 ASSEMBLY
SN B020000 — B069999

CKT NO	GRID COORD	CKT NO	GRID COORD	CKT NO	GRID COORD	CKT NO	GRID COORD	CKT NO	GRID COORD
C904	2C	C985	3B	P920	3B	Q968	4B	R961	4C
C907	2B	C987	2C	P923	1B			R966	3B
C914	2C			P930	4B	R902	3B	R967	3B
C916	2C	CR904	2C	P933	3A	R903	2B	R968	4B
C917	2B	CR905	2C	P940	4B	R904	2C	R986	2A
C918	2B	CR914	2C	P950	5B	R905	2C		
C920	1D	CR927	3E	P994	5B	R907	2B	T922	2D
C921	2D	CR928	3E			R908	2B	T942	4D
C927	3D	CR942	4E	Q903	2B	R910	2B		
C929	3D	CR952	5D	Q904	2B	R914	2C	TP942	2C
C944	3D	CR953	5E	Q908	2B	R915	1C	TP948	3B
C945	3C	CR968	4B	Q910	2B	R916	5B	TP968	4C
C953	5E			Q914	2C	R918	1C	TP980	4B
C954	5C	L945	3C	Q926	3D	R919	1C		
C955	4C	L955	5C	Q928	3E	R920	1D	U918	1B
C961	4B	L982	4C	Q962	5B	R921	1D		
C967	4B	L986	3C	Q964	4B	R927	3D	VR929	3D
C981	3A								
C983	2C								

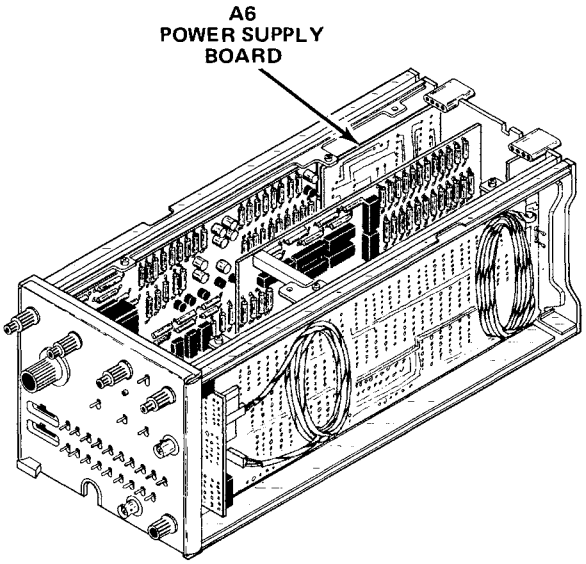

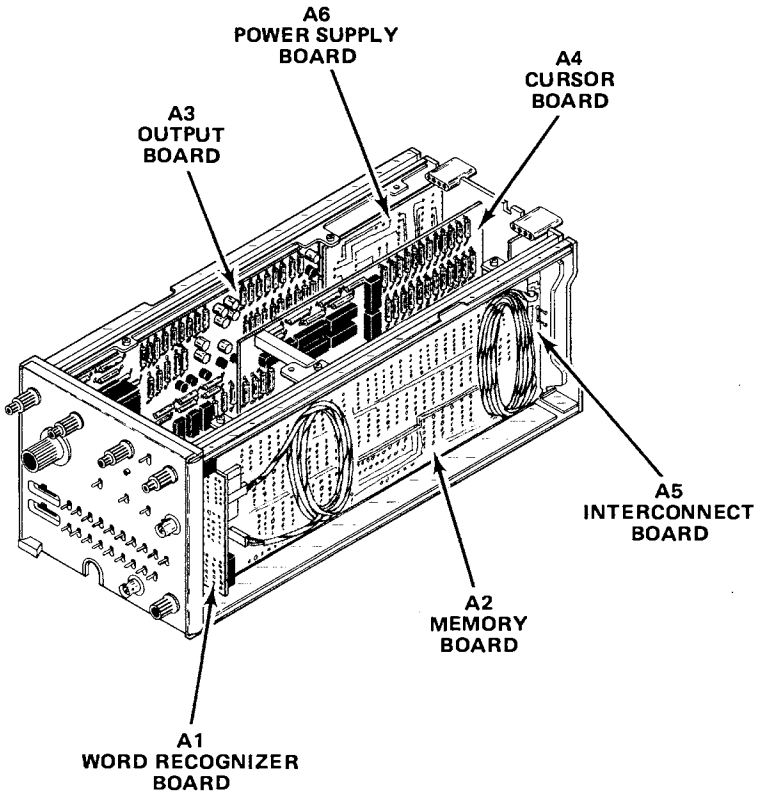
A6
POWER SUPPLY
BOARD
A4
CURSOR
BOARD
A3
OUTPUT
BOARD
A5
INTERCONNECT
BOARD
A2
MEMORY
BOARD
A1
WORD RECOGNIZER
BOARD

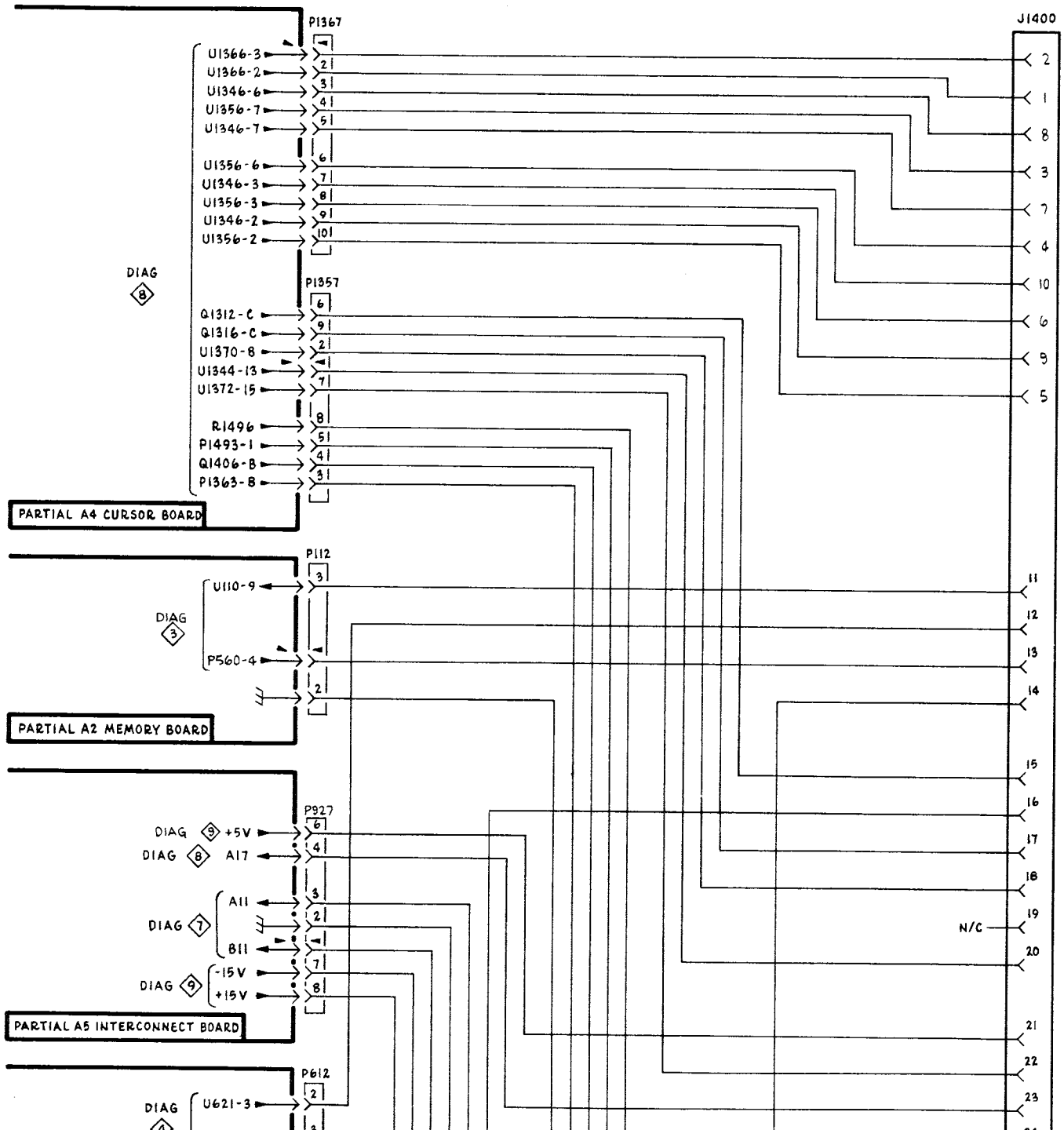
P1367
U1366-3
U1366-2
U1346-6
U1356-7
U1346-7
U1356-6
U1346-3
U1356-3
U1346-2
U1356-2
DIAG 8
P1357
Q1312-C
Q1316-C
U1370-8
U1344-13
U1372-15
R1496
P1493-1
Q1406-B
P1363-B
PARTIAL A4 CURSOR BOARD
P112
U110-9
DIAG 3
P560-4
PARTIAL A2 MEMORY BOARD
P927
DIAG 9 +5V
DIAG 8 A17
A11
DIAG 7
B11
-15V
DIAG 9
+15V
PARTIAL A5 INTERCONNECT BOARD
P612
DIAG
U621-3
J1400
N/C

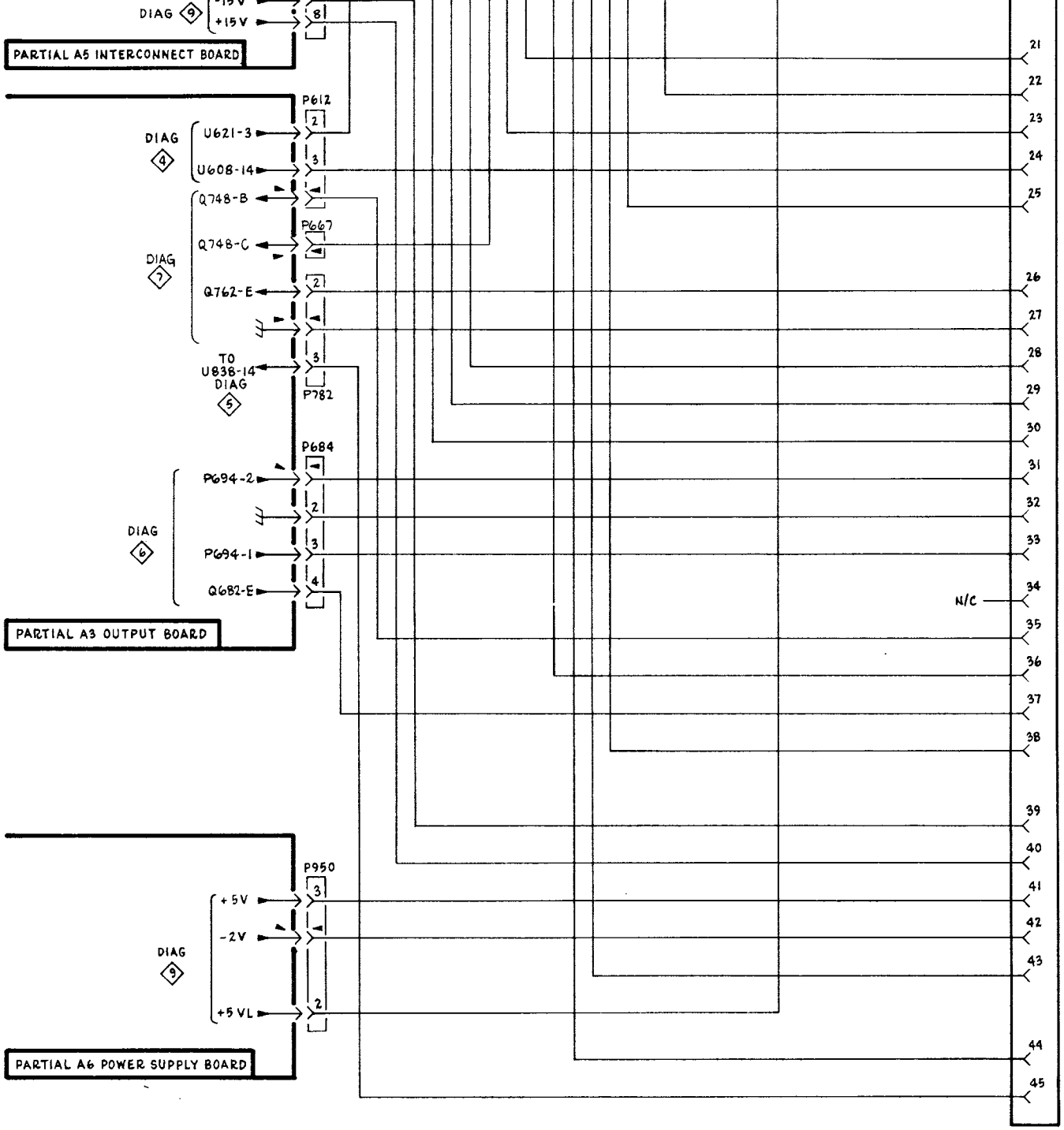

(SN B020000 & UP)

AUXILIARY INTERCONNECT

10

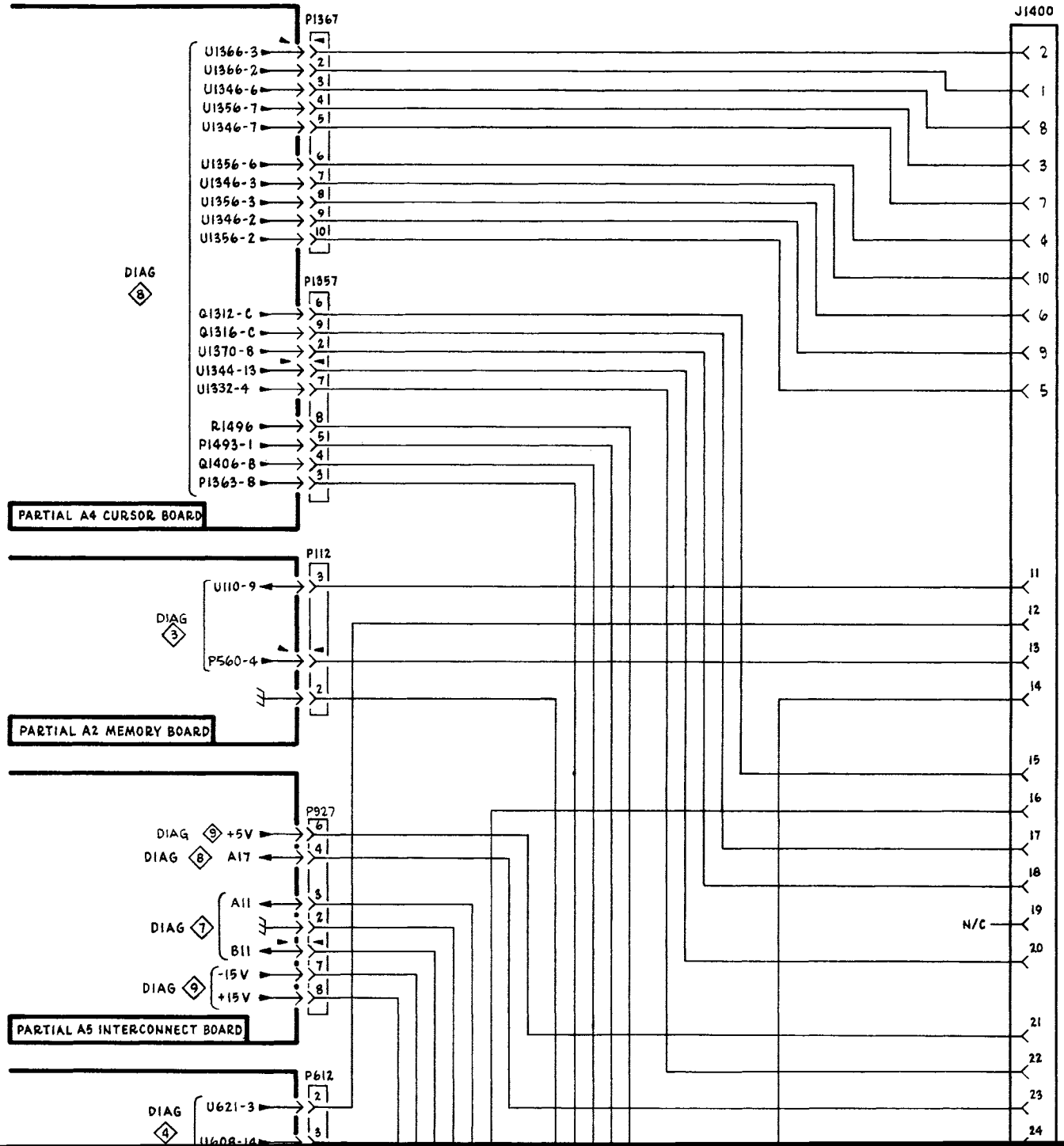

7D01

REV. B, JUNE 1978

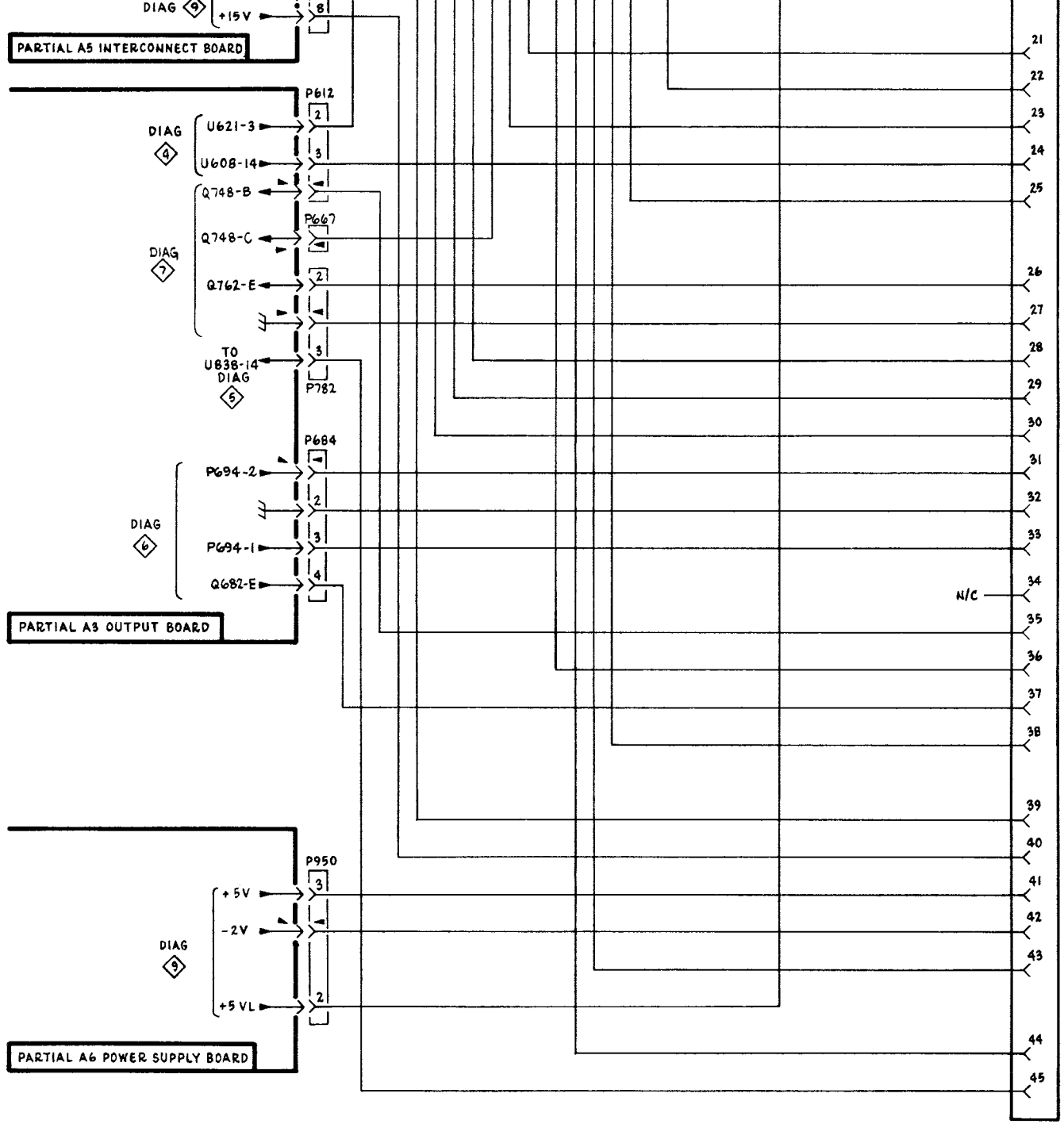

(SN B020000 & UP)

AUXILIARY INTERCONNECT

10

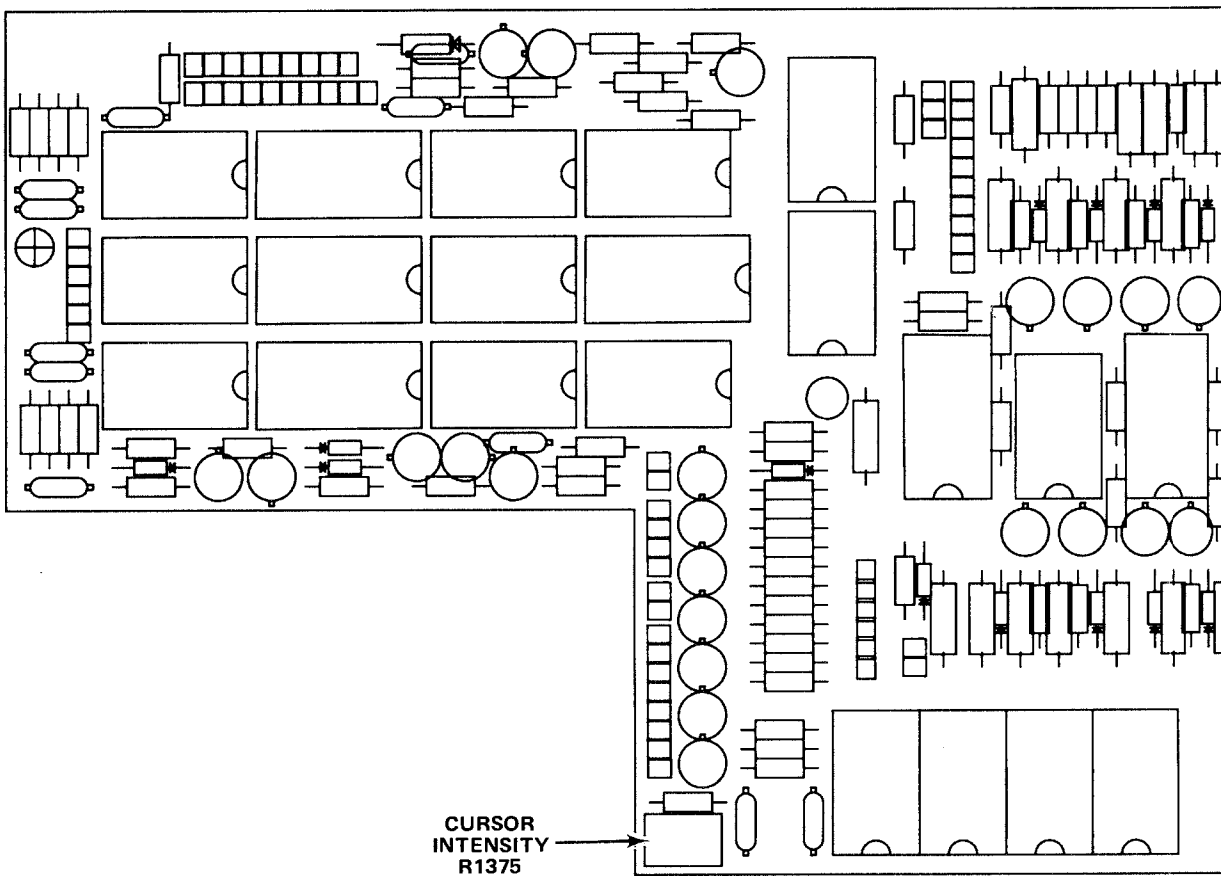

Figure 8-19. Test point and adjustment locations (Cursor board).

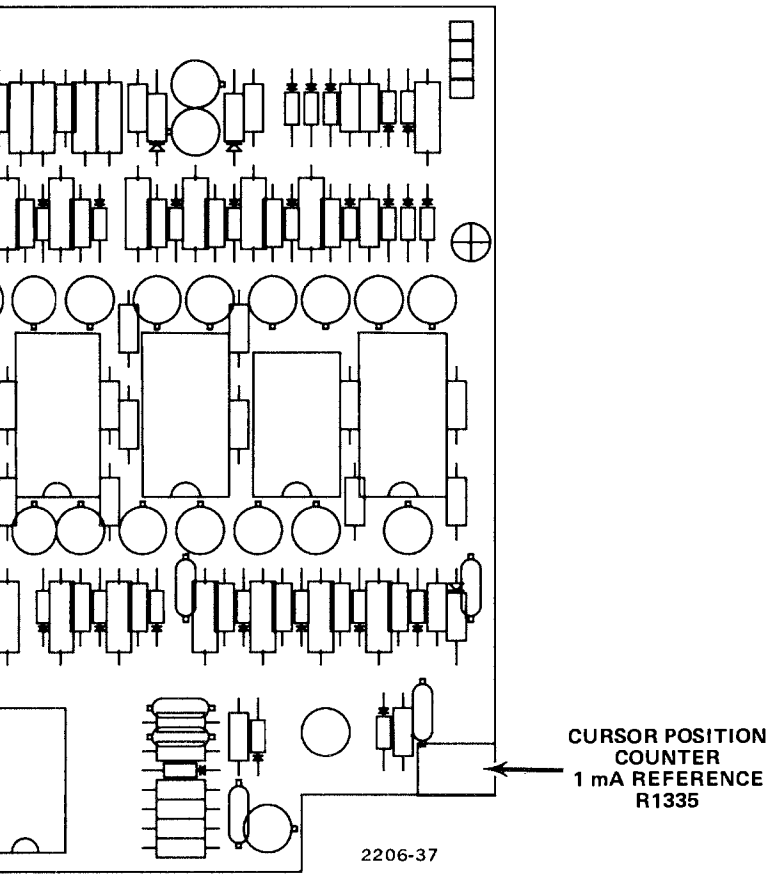

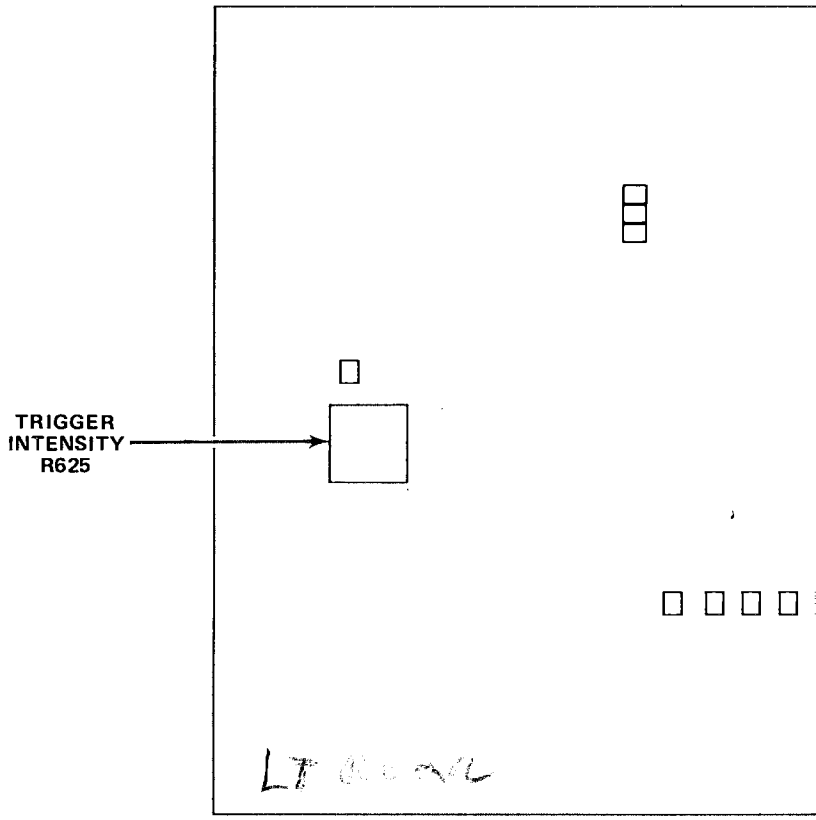

Figure 8-20. Test point and adju

).

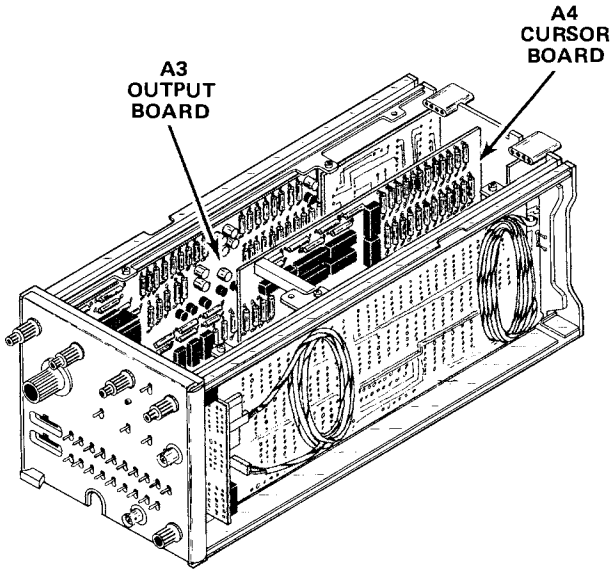

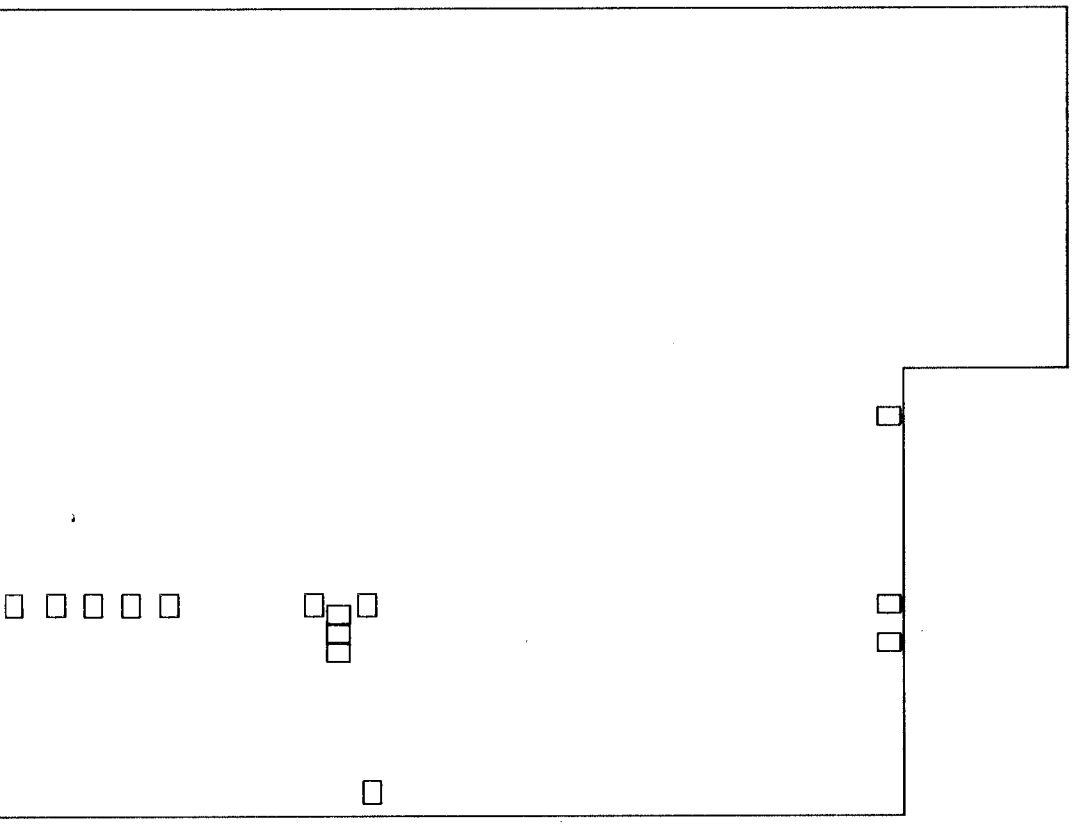

2206-38

est point and adjustment locations (Output board) as viewed with board installed.

@

REPLACEABLE MECHANICAL PARTS

PARTS ORDERING INFORMATION

Replacement parts are available from or through your local Tektronix, Inc. Field Office or representative.

Changes to Tektronix instruments are sometimes made to accommodate improved components as they become available, and to give you the benefit of the latest circuit improvements developed in our engineering department. It is therefore important, when ordering parts, to include the following information in your order: Part number, instrument type or number, serial number, and modification number if applicable.

If a part you have ordered has been replaced with a new or improved part, your local Tektronix, Inc. Field Office or representative will contact you concerning any change in part number.

Change information, if any, is located at the rear of this manual.

SPECIAL NOTES AND SYMBOLS

X000	Part first added at this serial number
00X	Part removed after this serial number

FIGURE AND INDEX NUMBERS

Items in this section are referenced by figure and index numbers to the illustrations.

INDENTATION SYSTEM

This mechanical parts list is indented to indicate item relationships. Following is an example of the indentation system used in the description column.

1 2 3 4 5 Name & Description

Assembly and/or Component
Attaching parts for Assembly and/or Component
- - - * - - -
Detail Part of Assembly and/or Component
Attaching parts for Detail Part
- - - * - - -
Parts of Detail Part
Attaching parts for Parts of Detail Part
- - - * - - -

Attaching Parts always appear in the same indentation as the item it mounts, while the detail parts are indented to the right. Indented items are part of, and included with, the next higher indentation. The separation symbol - - - * - - - indicates the end of attaching parts.

Attaching parts must be purchased separately, unless otherwise specified.

ITEM NAME

In the Parts List, an Item Name is separated from the description by a colon (:). Because of space limitations, an Item Name may sometimes appear as incomplete. For further Item Name identification, the U.S. Federal Cataloging Handbook H6-1 can be utilized where possible.

ABBREVIATIONS

"	INCH
#	NUMBER SIZE
ACTR	ACTUATOR
ADPTR	ADAPTER
ALIGN	ALIGNMENT
AL	ALUMINUM
ASSEM	ASSEMBLED
ASSY	ASSEMBLY
ATTEN	ATTENUATOR
AWG	AMERICAN WIRE GAGE
BD	BOARD
BRKT	BRACKET
BRS	BRASS
BRZ	BRONZE
BSHG	BUSHING
CAB	CABINET
CAP	CAPACITOR
CER	CERAMIC
CHAS	CHASSIS
CKT	CIRCUIT
COMP	COMPOSITION
CONN	CONNECTOR
COV	COVER
CPLG	COUPLING
CRT	CATHODE RAY TUBE
DEG	DEGREE
DWR	DRAWER
ELCTRN	ELECTRON
ELEC	ELECTRICAL
ELCTLT	ELECTROLYTIC
ELEM	ELEMENT
EPL	ELECTRICAL PARTS LIST
EQPT	EQUIPMENT
EXT	EXTERNAL
FIL	FILLISTER HEAD
FLEX	FLEXIBLE
FLH	FLAT HEAD
FLTR	FILTER
FR	FRAME or FRONT
FSTNR	FASTENER
FT	FOOT
FXD	FIXED
GSKT	GASKET
HDL	HANDLE
HEX	HEXAGON
HEX HD	HEXAGONAL HEAD
HEX SOC	HEXAGONAL SOCKET
HLCPS	HELICAL COMPRESSION
HLEXT	HELICAL EXTENSION
HV	HIGH VOLTAGE
IC	INTEGRATED CIRCUIT
ID	INSIDE DIAMETER
IDENT	IDENTIFICATION
IMPLR	IMPELLER
IN	INCH
INCAND	INCANDESCENT
INSUL	INSULATOR
INTL	INTERNAL
LPHLDR	LAMPHOLDER
MACH	MACHINE
MECH	MECHANICAL
MTG	MOUNTING
NIP	NIPPLE
NON WIRE	NOT WIRE WOUND
OBD	ORDER BY DESCRIPTION
OD	OUTSIDE DIAMETER
OVH	OVAL HEAD
PH BRZ	PHOSPHOR BRONZE
PL	PLAIN or PLATE
PLSTC	PLASTIC
PN	PART NUMBER
PNH	PAN HEAD
PWR	POWER
RCPT	RECEPTACLE
RES	RESISTOR
RGD	RIGID
RLF	RELIEF
RTNR	RETAINER
SCH	SOCKET HEAD
SCOPE	OSCILLOSCOPE
SCR	SCREW
SE	SINGLE END
SECT	SECTION
SEMICOND	SEMICONDUCTOR
SHLD	SHIELD
SHLDR	SHOULDERED
SKT	SOCKET
SL	SLIDE
SLFLKG	SELF-LOCKING
SLVG	SLEEVING
SPR	SPRING
SQ	SQUARE
SST	STAINLESS STEEL
STL	STEEL
SW	SWITCH
T	TUBE
TERM	TERMINAL
THD	THREAD
THK	THICK
TNSN	TENSION
TPG	TAPPING
TRH	TRUSS HEAD
V	VOLTAGE
VAR	VARIABLE
W/	WITH
WSHR	WASHER
XFMR	TRANSFORMER
XSTR	TRANSISTOR

CROSS INDEX—MFR. CODE NUMBER TO MANUFACTURER

Mfr. Code	Manufacturer	Address	City, State, Zip
000BK	STAUFFER SUPPLY	105 SE TAYLOR	PORTLAND, OR 97214
000CY	NORTHWEST FASTENER SALES, INC.	7923 SW CIRRUS DRIVE	BEAVERTON, OR 97005
000EX	O'HARA METAL PRODUCT COMPANY	542 BRANNAN STREET	SAN FRANCISCO, CA 94107
000FW	WESTERN SINTERING CO INC.	2620 STEVENS DRIVE	RICHLAND, WA 99352
00779	AMP, INC.	P O BOX 3608	HARRISBURG, PA 17105
01961	PULSE ENGINEERING, INC.	7250 CONVOY COURT	SAN DIEGO, CA 92111
06540	AMATOM ELECTRONIC HARDWARE, DIV. OF MITE CORP.	446 BLAKE ST.	NEW HAVEN, CT 06515
08261	SPECTRA-STRIP CORP.	7100 LAMPSON AVE.	GARDEN GROVE, CA 92642
09353	C AND K COMPONENTS, INC.	103 MORSE STREET	WATERTOWN, MA 02172
13511	AMPHENOL CARDRE DIV., BUNKER RAMO CORP.		LOS GATOS, CA 95030
22526	BERG ELECTRONICS, INC.	YOUK EXPRESSWAY	NEW CUMBERLAND, PA 17070
22599	ESNA, DIV. OF AMERACE CORPORATION	16150 STAGG STREET	VAN NUYS, CA 91409
24618	TRANSCON MFG. CO.	2655 PERTH ST.	DALLAS, TX 75220
24931	SPECIALITY CONNECTOR CO., INC.	2620 ENDRESS PLACE	GREENWOOD, IN 46142
53217	TECHNICAL WIRE PRODUCTS, INC.	427 OLIVE STREET	SANTA BARBARA, CA 93101
59730	THOMAS AND BETTS COMPANY	36 BUTLER ST.	ELIZABETH, NJ 07207
71279	CAMBRIDGE THERMIONIC CORP.	445 CONCORD AVE.	CAMBRIDGE, MA 02138
71468	ITT CANNON ELECTRIC	666 E. DYER RD.	SANTA ANA, CA 92702
71785	TRW, CINCH CONNECTORS	1501 MORSE AVENUE	ELK GROVE VILLAGE, IL 60007
73743	FISCHER SPECIAL MFG. CO.	446 MORGAN ST.	CINCINNATI, OH 45206
73803	TEXAS INSTRUMENTS, INC., METALLURGICAL MATERIALS DIV.	34 FOREST STREET	ATTLEBORO, MA 02703
74445	HOLO-KROME CO.	31 BROOK ST. WEST	HARTFORD, CT 06110
75497	LAMSON AND SESSIONS CO.	5000 TIEDEMAN ROAD	CLEVELAND, OH 44144
78189	ILLINOIS TOOL WORKS, INC. SHAKEPROOF DIVISION	ST. CHARLES ROAD	ELGIN, IL 60120
79807	WROUGHT WASHER MFG. CO.	2100 S. O BAY ST.	MILWAUKEE, WI 53207
80009	TEKTRONIX, INC.	P O BOX 500	BEAVERTON, OR 97077
83385	CENTRAL SCREW CO.	2530 CRESCENT DR.	BROADVIEW, IL 60153
87308	N. L. INDUSTRIES, INC., SOUTHERN SCREW DIV.	P. O. BOX 1360	STATESVILLE, NC 28677
93907	TEXTRON INC. CAMCAR DIV	600 18TH AVE	ROCKFORD, IL 61101
97464	INDUSTRIAL RETAINING RING CO.	57 CORDIER ST.	IRVINGTON, NJ 07111
98159	RUBBER TECK, INC.	19115 HAMILTON AVE., P O BOX 389	GARDENA, CA 90247

Fig. & Index No.	Tektronix Part No.	Serial/Model No. Eff	Dscont	Qty	1 2 3 4 5 Name & Description	Mfr Code	Mfr Part Number
1-1	337-1064-04			2	SHIELD,ELEC:SIDE PLUG-IN UNITS	80009	337-1064-00
-2	366-1319-00			3	KNOB:GRAY	80009	366-1319-00
	213-0725-00			3	. SETSCREW:3-48 X 0.095 INCH,HEX SOC STL	74445	OBD
-3	366-1059-00			1	PUSH BUTTON:GRAY	80009	366-1059-00
-4	366-1077-00			3	KNOB:GRAY	80009	366-1077-00
	213-0153-00			3	. SETSCREW:5-40 X 0.125,STL BK OXD,HEX SKT	000CY	OBD
-5	366-1213-00			1	KNOB:GRAY	80009	366-1213-00
	213-0153-00			1	. SETSCREW:5-40 X 0.125,STL BK OXD,HEX SKT	000CY	OBD
-6	366-1631-00			1	KNOB:GRAY,0.252 ID,1.25 OD,0.79 H	80009	366-1631-00
	213-0153-00			2	. SETSCREW:5-40 X 0.125,STL BK OXD,HEX SKT	000CY	OBD
-7	131-0955-00			2	CONN,RCPT,ELEC:BNC,FEMALE	13511	31-279
-8	131-1315-00	B020000	B086769	1	CONN,RCPT,ELEC:BNC,FEMALE	80009	131-1315-00
	131-1315-01	B086770		1	CONN,RCPT,ELEC:BNC,FEMALE	24931	28JR 306-1
-9	210-0255-00			1	TERMINAL,LUG:0.391 ID,LOCKING,BRS CD PL	80009	210-0255-00
-10	366-1189-00			1	KNOB:GRAY	80009	366-1189-00
	213-0153-00			1	. SETSCREW:5-40 X 0.125,STL BK OXD,HEX SKT	000CY	OBD
-11	348-0115-01			1	GROMMET,PLASTIC:U-SHAPED	80009	348-0115-01
-12	366-1058-69			1	KNOB:GRAY	80009	366-1058-69
					(ATTACHING PARTS)		
-13	214-1095-00			1	PIN,SPG,SPLIT:0.094 OD X 0.187 INCH LONG	22599	52-022-094-0187
					- - - * - - -		
-14	105-0076-02	B020000	B101058	1	REL BAR,LATCH:PLUG-IN UNIT	80009	105-0076-02
	105-0076-04	B101059		1	RELEASE BAR,LCH:PLUG-IN UNIT	80009	105-0076-04
-15	214-1280-00			1	SPRING,HLCPS:0.14 OD X 1.126"L,0.16"DIA W	80009	214-1280-00
-16	----- -----			1	RESISTOR,VAR(SEE R605,S605,R606 REPL)		
					(ATTACHING PARTS)		
-17	210-0583-00			1	NUT,PLAIN,HEX:0.25-32 X 0.312 INCH,BRS	73743	2X20317-402
-18	210-0940-00			1	WASHER,FLAT:0.25 ID X 0.375 INCH OD,STL	79807	OBD
-19	210-0046-00			1	WASHER,LOCK:0.261 ID,INTL,0.018 THK,BRS	78189	1214-05-00-0541C
					- - - * - - -		
-20	----- -----			1	RESISTOR,VAR:(SEE R1265 REPL)		
					(ATTACHING PARTS)		
-21	210-0583-00			1	NUT,PLAIN,HEX:0.25-32 X 0.312 INCH,BRS	73743	2X20317-402
-22	210-0940-00			1	WASHER,FLAT:0.25 ID X 0.375 INCH OD,STL	79807	OBD
					- - - * - - -		
-23	333-2124-01	B020000	B079999	1	PANEL,FRONT:	80009	333-2124-01
	333-2124-02	B080000		1	PANEL,FRONT:	80009	333-2124-02
					(ATTACHING PARTS)		
-24	213-0055-00			1	SCR,TPG,THD FOR:2-32 X 0.188 INCH,PNH STL	93907	OBD
					- - - * - - -		
-25	348-0235-00			2	SHLD GSKT,ELEC:4.734 INCH LONG	80009	348-0235-00
-26	378-0635-00			1	LENS,LIGHT:WHITE	80009	378-0635-00
-27	----- -----			2	RESISTOR,VAR:(SEE R680,R695,R780,R785 REPL)		
					(ATTACHING PARTS)		
-28	210-0583-00			2	NUT,PLAIN,HEX:0.25-32 X 0.312 INCH,BRS	73743	2X20317-402
-29	210-0046-00			2	WASHER,LOCK:0.261 ID,INTL,0.018 THK,BRS	78189	1214-05-00-0541C
					- - - * - - -		
-30	136-0387-00			1	JACK,TIP:GRAY	71279	450-4352-01-0318
-31	----- -----			1	RESISTOR,VAR:(SEE R1270 REPL)		
					(ATTACHING PARTS)		
-32	210-0597-00			1	NUT,PLAIN,HEX.:10-32 X 0.312 INCH,BRS	73743	2X20018-402
					- - - * - - -		
-33	352-0277-00			1	LAMPHOLDER:(1)WIRE LEAD TYPE	80009	352-0277-00
	352-0157-00			1	LAMPHOLDER:WHITE PLASTIC	80009	352-0157-00
-34	200-0935-00			2	BASE,LAMPHOLDER:0.29 OD X 0.19 CASE	80009	200-0935-00
-35	----- -----			1	SWITCH,WIRED:ROTARY,CURSOR(SEE S1342,S1352 REPL)		
					(ATTACHING PARTS)		
-36	210-0583-00			1	NUT,PLAIN,HEX:0.25-32 X 0.312 INCH,BRS	73743	2X20317-402
-37	210-0046-00			1	WASHER,LOCK:0.261 ID,INTL,0.018 THK,BRS	78189	1214-05-00-0541C
					- - - * - - -		
-38	----- -----			1	SWITCH,TOGGLE:SPDT,0.4A,20V(SEE S1493 REPL)		
-39	352-0157-00			1	LAMPHOLDER:WHITE PLASTIC	80009	352-0157-00
-40	----- -----			1	LAMP,LED:2V,GREEN(SEE DS620 REPL)		
-41	----- -----			1	SWITCH,PUSH:SPST,RED BUTTON(SEE S614 REPL)		
-42	210-0008-00			1	WASHER,LOCK:INTL,0.172 ID X 0.331"OD,STL	78189	1208-00-00-0541C

Fig. & Index No.	Tektronix Part No.	Serial/Model No. Eff	Dscont	Qty	1 2 3 4 5 Name & Description	Mfr Code	Mfr Part Number
1-43	348-0067-00			1	GROMMET,PLASTIC:0.312 INCH DIA	80009	348-0067-00
-44	----- -----			1	DELAY LINE,ELEC:4NS,93 OHM(SEE DL 1262 REPL)		
					(ATTACHING PARTS)		
-45	211-0012-00			2	SCREW,MACHINE:4-40 X 0.375,PNH STL CD PL	83385	OBD
-46	210-0586-00			1	NUT,PL,ASSEM WA:4-40 X 0.25,STL CD PL	83385	OBD
					- - - * - - -		
	----- -----			-	DELAY LINE ASSY INCLUDES:		
-47	343-0549-00			2	. STRAP,TIEDOWN:0.091 W X 3.62 INCH LONG	59730	TY100
-48	346-0121-00			2	. STRAP,ELEC COMP:TIE DOWN,5.0 LONG	59730	3Y-34M
-49	131-0622-00			2	. CONTACT,ELEC:0.577"L,28-32 AWG WIRE	22526	46241
-50	131-0792-00			2	. CONNECTOR,TERM:18-20 AWG,CU BE GOLD PL	22526	46221
-51	352-0198-02			2	. HLDR,TERM CONN:2 WIRE RED	80009	352-0198-02
-52	----- -----			1	DELAY LINE,ELEC:12NS,50 OHM,(SEE DL108 REPL)		
					(ATTACHING PARTS)		
-53	211-0012-00			2	SCREW,MACHINE:4-40 X 0.375,PNH STL CD PL	83385	OBD
					- - - * - - -		
	----- -----			-	DELAY LINE ASSY INCLUDES:		
-54	343-0549-00			2	. STRAP,TIEDOWN:0.091 W X 3.62 INCH LONG	59730	TY100
-55	346-0121-00			2	. STRAP,ELEC COMP:TIE DOWN,5.0 LONG	59730	3Y-34M
-56	210-0774-00			2	. EYELET,METALLIC:0.152 OD X 0.245 INCH L,BRS	80009	210-0774-00
-57	210-0775-00			2	. EYELET,METALLIC:0.126 OD X 0.23 INCH L,BRS	80009	210-0775-00
	----- -----	XB080000		1	CKT BOARD ASSY:CLOCK QUALIFIER(SEE A6 REPL)		
					(ATTACHING PARTS)		
	211-0007-00	XB080000		2	SCREW,MACHINE:4-40 X 0.188 INCH,PNH STL	83385	OBD
					- - - * - - -		
	----- -----			-	CKT BOARD ASSY INCLUDES:		
	131-0589-00	XB080000		14	. TERMINAL,PIN:0.46 L X 0.025 SQ	22526	48283-029
	131-0993-00	XB080000		2	. BUS,CONDUCTOR:2 WIRE BLACK	00779	850100-01
	136-0260-02	XB080000		1	. SKT,PL-IN ELEK:MICROCIRCUIT,16 DIP,LOW CLE	71785	133-51-92-008
-58	----- -----			1	CKT BOARD ASSY:MEMORY(SEE A2 REPL)		
					(ATTACHING PARTS)		
-59	211-0008-00			1	SCREW,MACHINE:4-40 X 0.250,PNH,STL,CD PL	83385	OBD
					- - - * - - -		
	----- -----			-	CKT BOARD ASSY INCLUDES:		
-60	136-0578-00	B020000	B100265X	2	. SKT,PL-IN ELEK:MICROCKT,24 PIN,LOW PROFILE	73803	C S9002-24
-61	136-0260-02	B020000	B100265	42	. SKT,PL-IN ELEK:MICROCIRCUIT,16 DIP,LOW CLE	71785	133-51-92-008
	136-0260-02	B100266		21	. SKT,PL-IN ELEK:MICROCIRCUIT,16 DIP,LOW CLE	71785	133-51-92-008
-62	131-1437-00			1	. CONN,RCPT,ELEC:25 FEMALE CONTACT	71468	DB25S-F179
					(ATTACHING PARTS)		
-63	131-0976-00			2	. CONNECTOR,RCPT,:SLIDING LOCK POST	71468	D53018
					- - - * - - -		
-64	129-0236-00			2	. SPACER,POST:0.188 HEX X 0.375 INCH LONG	06540	9726-A-0440
-65	131-1003-00			2	. CONN,RCPT,ELEC:CKT BD MT,3 PRONG	80009	131-1003-00
-66	136-0252-07	B020000	B100265	8	. SOCKET,PIN CONN:W/O DIMPLE	22526	75060-012
	136-0252-07	B100266		2	. SOCKET,PIN CONN:W/O DIMPLE	22526	75060-012
-67	131-0608-00	B020000	B100265	89	. TERMINAL,PIN:0.365 L X 0.025 PH BRZ GOLD	22526	47357
	131-0608-00	B100266		86	. TERMINAL,PIN:0.365 L X 0.025 PH BRZ GOLD	22526	47357
	131-0589-00			7	. TERMINAL,PIN:0.46 L X 0.025 SQ	22526	48283-029
	119-0775-01			2	. DELAY LINE,ELEC:12.5NS,100 OHM,24 PIN DBL	01961	PE 22297
-68	214-0579-00			6	. TERM,TEST POINT:BRS CD PL	80009	214-0579-00
-69	----- -----			1	CKT BOARD ASSY:WORD RECOGNIZER(SEE A1 REPL)		
					(ATTACHING PARTS)		
-70	211-0030-00			2	SCREW,MACHINE:2-56 X 0.25"82 DEG,FLH STL	83385	OBD
					- - - * - - -		
	129-0438-00	B020000	B010274	2	. POST,ELEC-MECH:2.56 X 0.188 X 0.458"LONG	80009	129-0438-00
-71	129-0301-00	B010275		2	. POST,ELEC-MECH:0.156 HEX X 0.312 L,BRS	80009	129-0301-00
					(ATTACHING PARTS)		
-72	210-0001-00			2	. WASHER,LOCK:INTL,0.092 ID X 0.18"OD,STL	78189	1202-00-00-0541C
-73	211-0022-00			2	. SCREW,MACHINE:2-56 X 0.188 INCH,PNH STL	83385	OBD
-74	210-0938-00			2	. WASHER,FLAT:0.109 ID X 0.25 INCH OD,STL	75497	AN960-3
					- - - * - - -		
-75	131-1897-00			2	. CONNECTOR,RCPT,:25 MALE CONTACT	71785	2805125002
					(ATTACHING PARTS)		
-76	211-0001-00			4	. SCREW,MACHINE:2-56 X 0.25 INCH,PNH STL	87308	OBD
-77	210-0001-00			4	. WASHER,LOCK:INTL,0.092 ID X 0.18"OD,STL	78189	1202-00-00-0541C
-78	220-0795-00			2	. NUT,SPACER,PL:1.2" LONG X 0.25" WIDE	80009	220-0795-00
					- - - * - - -		

Fig. & Index No.	Tektronix Part No.	Serial/Model No. Eff	Dscont	Qty	1 2 3 4 5 Name & Description	Mfr Code	Mfr Part Number
1-79	407-1824-00			1	. BRKT,CONN MTG:ALUMINUM	80009	407-1824-00
-80	131-0608-00			52	. TERMINAL,PIN:0.365 L X 0.025 PH BRZ GOLD	22526	47357
	131-0589-00			2	. TERMINAL,PIN:0.46 L X 0.025 SQ	22526	48283-029
-81	260-1335-00			4	. SWITCH,TOGGLE:SPDT,0.4A,20VDC	09353	7101 SHCB8E
-82	260-1809-00			21	. SWITCH,TOGGLE:SPTT,0.4A,20V	09353	7103SYCB8E
-83	136-0252-07	B020000	B100219	21	. SOCKET,PIN CONN:W/O DIMPLE	22526	75060-012
	136-0252-07	B100220		18	. SOCKET,PIN CONN:W/O DIMPLE	22526	75060-012
-84	136-0514-00			1	. SKT,PL-IN ELEC:MICROCIRCUIT,8 DIP	73803	CS9002-8
-85	136-0260-02			9	. SKT,PL-IN ELEK:MICROCIRCUIT,16 DIP,LOW CLE	71785	133-51-92-008
-86	337-2364-00			1	SHIELD,ELEC:SWITCH	80009	337-2364-00
-87	348-0503-00			1	SHLD,GSKT,ELEC:KNITTED MESH,0.25 X 0.375	53217	20-40130
-88	358-0464-00			3	BUSHING,SLEEVE:0.257 IDX0.312 ODX0.205"L	80009	358-0464-00
-89	386-1858-09	B020000	B100904	1	SUBPANEL,FRONT:	80009	386-1858-09
	386-1858-20	B100905		1	SUBPANEL,FRONT:	80009	386-1858-20
					(ATTACHING PARTS)		
-90	213-0192-00	B020000	B099634	8	SCR,TPG,THD FOR:6-32 X 0.50 INCH,PNH STL	87308	OBD
	213-0793-00	B099635		8	SCREW,TPG,TF:6-32 X 0.4375,TAPTITE,FIL	93907	OBD
					- - - * - - -		
-91	214-1054-00			1	SPRING,FLAT:0.825 X 0.322,SST	80009	214-1054-00
-92	105-0075-00			1	BOLT,LATCH:7A & 7B SER PL-IN	80009	105-0075-00
-93	214-1061-00			1	SPRING,GROUND:FLAT	80009	214-1061-00
-94	386-3575-00			1	SUPPORT,CKT CD:2.07 X 0.312 INCH,AL	80009	386-3575-00
					(ATTACHING PARTS)		
-95	211-0008-00			1	SCREW,MACHINE:4-40 X 0.250,PNH,STL,CD PL	83385	OBD
-96	211-0007-00			1	SCREW,MACHINE:4-40 X 0.188 INCH,PNH STL	83385	OBD
					- - - * - - -		
-97	129-0230-00			1	SPACER,POST:1.375L,W/4-40THD EA END,BRAS	80009	129-0230-00
					(ATTACHING PARTS)		
-98	211-0008-00			2	SCREW,MACHINE:4-40 X 0.250,PNH,STL,CD PL	83385	OBD
					- - - * - - -		
-99	----- -----			1	CKT BOARD ASSY:CURSOR(SEE A4 REPL)		
					(ATTACHING PARTS)		
-100	211-0008-00			2	SCREW,MACHINE:4-40 X 0.250,PNH,STL,CD PL	83385	OBD
					- - - * - - -		
	----- -----			-	CKT BOARD ASSY INCLUDES:		
-101	136-0260-02	B020000	B100243	8	. SKT,PL-IN ELEK:MICROCIRCUIT,16 DIP,LOW CLE	71785	133-51-92-008
	136-0260-02	B100244		3	. SKT,PL-IN ELEK:MICROCIRCUIT,16 DIP,LOW CLE	71785	133-51-92-008
-102	136-0269-02	B020000	B100243	16	. SKT,PL-IN ELEK:MICROCIRCUIT,14 DIP,LOW CLE	73803	CS9002-14
	136-0269-02	B100244		5	. SKT,PL-IN ELEK:MICROCIRCUIT,14 DIP,LOW CLE	73803	CS9002-14
-103	131-0608-00	B020000	B100243	57	. TERMINAL,PIN:0.365 L X 0.025 PH BRZ GOLD	22526	47357
	131-0608-00	B100244		66	. TERMINAL,PIN:0.365 L X 0.025 PH BRZ GOLD	22526	47357
-104	136-0252-04			109	. SOCKET,PIN TERM:U/W 0.016-0.018 DIA PINS	22526	75060-007
-105	214-0579-00			3	. TERM,TEST POINT:BRS CD PL	80009	214-0579-00
	136-0252-07	B020000	B100243	130	. SOCKET,PIN CONN:W/O DIMPLE	22526	75060-012
	136-0252-07	B100244		22	. SOCKET,PIN CONN:W/O DIMPLE	22526	75060-012
	672-0560-00	B020000	B100807X	1	CKT BOARD ASSY:OUTPUT	80009	672-0560-00
-106	----- -----			1	CKT BOARD ASSY:OUTPUT(SEE A3 REPL)		
					(ATTACHING PARTS)		
-107	211-0008-00			3	SCREW,MACHINE:4-40 X 0.250,PNH,STL,CD PL	83385	OBD
					- - - * - - -		
	----- -----			-	CKT BOARD ASSY INCLUDES:		
	263-1133-00			1	. DRUM ASSY,CAM S:TIME BASE	80009	263-1133-00
					(ATTACHING PARTS)		
-108	211-0244-00			4	. SCR,ASSEM WSHR:4-40 X 0.312 INCH,PNH STL	78189	OBD
					- - - * - - -		
	----- -----			-	. DRUM ASSY INCLUDES:		
-109	200-1859-00			1	. . COVER,CAM SW:1.8 L,ALUMINUM	80009	200-1859-00
					(ATTACHING PARTS)		
-110	211-0008-00			2	. . SCREW,MACHINE:4-40 X 0.250,PNH,STL,CD PL	83385	OBD
-111	210-0004-00			2	. . WASHER,LOCK:#4 INTL,0.015THK,STL CD PL	000BK	OBD
					- - - * - - -		
-112	210-0406-00			3	. . NUT,PLAIN,HEX.:4-40 X 0.188 INCH,BRS	73743	12161-50
-113	214-1139-02			2	. . SPRING,FLAT:GREEN COLORED	80009	214-1139-02
-114	214-1127-00			2	. . ROLLER,DETENT:0.125 DIA X 0.125,SST	80009	214-1127-00

Fig. & Index No.	Tektronix Part No.	Serial/Model No. Eff	Dscont	Qty	1 2 3 4 5 Name & Description	Mfr Code	Mfr Part Number
1-115	401-0081-02			1	. . BEARING,CAM SW:FRONT	80009	401-0081-02
					(ATTACHING PARTS)		
-116	354-0391-00			1	. . RING,RETAINING:0.395"FREE ID X 0.025" STL	97464	3100-43-CD
					- - - * - - -		
-117	105-0693-00			1	. . DRUM,CAM SW:TIME BASE	80009	105-0693-00
-118	210-0406-00			4	. . NUT,PLAIN,HEX.:4-40 X 0.188 INCH,BRS	73743	12161-50
-119	401-0115-00			1	. . BEARING,CAM SW:CENTER	80009	401-0115-00
-120	131-0963-00			1	. . CONTACT,ELEC:GROUNDING	000EX	OBD
-121	131-0604-00			9	. CONTACT,ELEC:CKT BD SW,SPR,CU BE	80009	131-0604-00
-122	131-0993-00			2	. BUS,CONDUCTOR:2 WIRE BLACK	00779	850100-01
-123	214-0579-00			3	. TERM,TEST POINT:BRS CD PL	80009	214-0579-00
-124	136-0514-00			1	. SKT,PL-IN ELEC:MICROCIRCUIT,8 DIP	73803	CS9002-8
-125	136-0260-02			23	. SKT,PL-IN ELEK:MICROCIRCUIT,16 DIP,LOW CLE	71785	133-51-92-008
-126	131-0608-00			94	. TERMINAL,PIN:0.365 L X 0.025 PH BRZ GOLD	22526	47357
-127	136-0252-07	B020000	B098829X	119	. SOCKET,PIN CONN:W/O DIMPLE	22526	75060-012
-128	136-0254-00			2	. SOCKET,PIN TERM:0.088 OD X 0.145 INCH LONG	00779	1-331892-5
	131-0589-00			5	. TERMINAL,PIN:0.46 L X 0.025 SQ	22526	48283-029
-129	131-1003-00			2	. CONN,RCPT,ELEC:CKT BD MT,3 PRONG	80009	131-1003-00
-130	179-2494-00	B020000	B098829	1	WIRING HARNESS,:FORMATER	80009	179-2494-00
	179-2494-01	B098830		1	WIRING HARNESS:FORMATTER	80009	179-2494-01
					(ATTACHING PARTS)		
-131	211-0008-00			2	SCREW,MACHINE:4-40 X 0.250,PNH,STL,CD PL	83385	OBD
					- - - * - - -		
	----- -----			-	WIRING HARENSS INCLUDES:		
-132	131-1345-00			1	. CONNECTOR,RCPT,:50 FEMALE CONTACT	71468	DD-50S
-133	131-0707-00			43	. CONNECTOR,TERM:22-26 AWG,BRS& CU BE GOLD	22526	47439
-134	352-0161-00			1	. HLDR,TERM CONN:3 WIRE,BLACK	80009	352-0161-00
	352-0161-02			3	. CONN BODY,PL,EL:3 WIRE RED	80009	352-0161-02
-135	352-0162-04			1	. CONN BODY,PL,EL:4 WIRE YELLOW	80009	352-0162-04
-136	352-0166-07			1	. CONN BODY,PL,EL:8 WIRE VIOLET	80009	352-0166-07
-137	352-0167-07			1	. CONN BODY,PL,EL:9 WIRE VIOLET	80009	352-0167-07
-138	352-0168-07			1	. CONN BODY,PL,EL:10 WIRE VIOLET	80009	352-0168-07
-139	220-0790-00			2	NUT,BLOCK:0.188 X 0.5 INCH SQUARE	80009	220-0790-00
					(ATTACHING PARTS))		
-140	211-0101-00			2	SCREW,MACHINE:4-40 X 0.25,100 DEG,FLH STL	83385	OBD
					- - - * - - -		
-141	----- -----			1	CKT BOARD ASSY:POWER SUPPLY(SEE A6 REPL)		
					(ATTACHING PARTS)		
-142	211-0008-00			2	SCREW,MACHINE:4-40 X 0.250,PNH,STL,CD PL	83385	OBD
					- - - * - - -		
	----- -----			-	CKT BOARD ASSY INCLUDES:		
-143	337-2284-00			1	. SHIELD,ELEC:CIRCUIT CARD	80009	337-2284-00
					(ATTACHING PARTS)		
-144	211-0007-00			3	. SCREW,MACHINE:4-40 X 0.188 INCH,PNH STL	83385	OBD
					- - - * - - -		
-145	----- -----			1	. XFMR,PWR,STPDN:(SEE T942 REPL)		
					(ATTACHING PARTS)		
-146	211-0008-00			2	. SCREW,MACHINE:4-40 X 0.250,PNH,STL,CD PL	83385	OBD
					- - - * - - -		
-147	136-0514-00	B020000	B079999	1	. SKT,PL-IN ELEC:MICROCIRCUIT,8 DIP	73803	CS9002-8
	136-0514-00	B080000		2	. SKT,PL-IN ELEC:MICROCIRCUIT,8 DIP	73803	CS9002-8
-148	214-0579-00			3	. TERM,TEST POINT:BRS CD PL	80009	214-0579-00
-149	136-0252-07	B020000	B099999	21	. SOCKET,PIN CONN:W/O DIMPLE	22526	75060-012
	136-0252-07	B100000		3	. SOCKET,PIN CONN:W/O DIMPLE	22526	75060-012
-150	131-0608-00			5	. TERMINAL,PIN:0.365 L X 0.025 PH BRZ GOLD	22526	47357
	346-0032-00			2	. STRAP,RETAINING:0.075 DIA X 4.0 L,MLD RBR	98159	2859-75-4
	198-3303-00			1	. WIRE SET,ELEC:	80009	198-3303-00
-151	175-0861-00			FT	. . WIRE,ELECTRICAL:4 WIRE RIBBON	08261	SS-0422-7(1061)
-152	131-0707-00			4	. . CONNECTOR,TERM:22-26 AWG,BRS& CU BE GOLD	22526	47439
-153	352-0200-03			1	. . HLDR,TERM CONN:4 WIRE ORANGE	80009	352-0200-03
-154	129-0367-00			1	POST,ELEC-MECH:0.25 HEX,0.345 INCH LONG	80009	129-0367-00
					(ATTACHING PARTS)		
-155	211-0007-00			1	SCREW,MACHINE:4-40 X 0.188 INCH,PNH STL	83385	OBD
					- - - * - - -		

Fig. & Index No.	Tektronix Part No.	Serial/Model No. Eff	Dscont	Qty	1 2 3 4 5 Name & Description	Mfr Code	Mfr Part Number
1-156	----- -----			1	CKT BOARD ASSY:INTERCONNECT(SEE A5 REPL)		
-157	131-0608-00			66	. TERMINAL,PIN:0.365 L X 0.025 PH BRZ GOLD	22526	47357
	131-0589-00			4	. TERMINAL,PIN:0.46 L X 0.025 SQ	22526	48283-029
-158	214-0579-02			3	. TERM,TEST POINT:BRASS	80009	214-0579-02
	136-0269-02			16	. SKT,PL-IN ELEK:MICROCIRCUIT,14 DIP,LOW CLE	73803	CS9002-14
	136-0260-02			8	. SKT,PL-IN ELEK:MICROCIRCUIT,16 DIP,LOW CLE	71785	133-51-92-008
	136-0252-07			130	. SOCKET,PIN CONN:W/O DIMPLE	22526	75060-012
-159	351-0217-00			1	GUIDE,CKT CARD:PLASTIC	80009	351-0217-00
					(ATTACHING PARTS)		
-160	211-0507-00			4	SCREW,MACHINE:6-32 X 0.312 INCH,PNH STL	83385	OBD
-161	220-0557-00			4	NUT,SLEEVE:6-32 X 0.204 OD X 0.118 L BRS	80009	220-0557-00
					- - - * - - -		
-162	220-0547-01			2	NUT,BLOCK:0.38 X 0.26 X0.282 (2)4-40 THD	000FW	OBD
					(ATTACHING PARTS)		
-163	211-0105-00			2	SCREW,MACHINE:4-40 X 0.188,100 DEG,FLH STL	83385	OBD
					- - - * - - -		
-164	351-0217-00			1	GUIDE,CKT CARD:PLASTIC	80009	351-0217-00
					(ATTACHING PARTS)		
-165	211-0507-00			4	SCREW,MACHINE:6-32 X 0.312 INCH,PNH STL	83385	OBD
-166	220-0556-00			4	NUT,SLEEVE:6-32 X 0.252 OD X 0.015"L BRS	80009	220-0556-00
					- - - * - - -		
-167	220-0547-01			5	NUT,BLOCK:0.38 X 0.26 X0.282 (2)4-40 THD	000FW	OBD
					(ATTACHING PARTS)		
-168	211-0007-00			5	SCREW,MACHINE:4-40 X 0.188 INCH,PNH STL	83385	OBD
					- - - * - - -		
	220-0793-00	XB080000		2	NUT BLOCK:(1)4-40 THRU,(1)4-40 CROSS	80009	220-0793-00
					(ATTACHING PARTS)		
	211-0105-00	XB080000		2	SCREW,MACHINE:4-40 X 0.188,100 DEG,FLH STL	83385	OBD
					- - - * - - -		
-169	386-1855-00			1	PANEL,REAR:	80009	386-1855-00
					(ATTACHING PARTS)		
-170	213-0192-00	B020000	B099634	8	SCR,TPG,THD FOR:6-32 X 0.50 INCH,PNH STL	87308	OBD
	213-0793-00	B099635		8	SCREW,TPG,TF:6-32 X 0.4375,TAPTITE,FIL	93907	OBD
-171	361-0326-00			1	SPACER,SLEEVE:0.18 ID X 0.25 OD X 0.10"L	80009	361-0326-00
					- - - * - - -		
-172	426-1292-00			2	FR SECT,PLUG-IN:UPPER LEFT AND RIGHT	80009	426-1292-00
-173	426-1293-00			2	FR SECT,PLUG-IN:BOTTOM LEFT AND RIGHT	80009	426-1293-00
	198-3254-00	B020000	B079999	1	WIRE SET,ELEC:	80009	198-3254-00
	198-3254-01	B080000	B100807	1	WIRE SET,ELEC:	80009	198-3254-01
	198-3254-02	B100808		1	WIRE SET,ELEC:	80009	198-3254-02
-174	175-0825-00			FT	. WIRE,ELECTRICAL:2 WIRE RIBBON	80009	175-0825-00
-175	175-0826-00			FT	. WIRE,ELECTRICAL:3 WIRE RIBBON	80009	175-0826-00
-176	175-0827-00			FT	. CABLE,SP,ELEC:4,26 AWG,STRD.PVC JKT,RBN	08261	SS04267(1061)0C
-177	175-0828-00			FT	. WIRE,ELECTRICAL:5 WIRE RIBBON	08261	SS-0526-710610C
-178	175-0833-00			FT	. WIRE,ELECTRICAL:10 WIRE RIBBON	08261	SS-1026-7
	175-0829-00	XB080000		1	. WIRE,ELECTRICAL:6 WIRE RIBBON	08261	SS-0626-710610C
-179	352-0171-02	B020000	B100807X	1	. CONN BODY,PL,EL:1 WIRE RED	80009	352-0171-02
	352-0171-03	B020000	B100807X	1	. CONN BODY,PL,EL:1 WIRE ORANGE	80009	352-0171-03
	352-0171-09			2	. CONN BODY,PL,EL:1 WIRE WHITE	80009	352-0171-09
-180	352-0169-00	B020000	B100807	4	. HLDR,TERM CONN:2 WIRE BLACK	80009	352-0169-00
	352-0169-00	B100808		2	. HLDR,TERM CONN:2 WIRE BLACK	80009	352-0169-00
	352-0169-03			2	. CONN BODY,PL,EL:2 WIRE ORANGE	80009	352-0169-03
	352-0169-04			3	. CONN BODY,PL,EL:2 WIRE YELLOW	80009	352-0169-04
	352-0169-05	B020000	B100807X	2	. CONN BODY,PL,EL:2 WIRE GREEN	80009	352-0169-05
	352-0169-08			3	. CONN BODY,PL,EL:2 WIRE GRAY	80009	352-0169-08
	352-0169-07			1	. CONN BODY,PL,EL:2 WIRE PURPLE	80009	352-0169-07
	352-0161-00	B020000	B100807	2	. HLDR,TERM CONN:3 WIRE,BLACK	80009	352-0161-00
	352-0161-00	B100808		1	. HLDR,TERM CONN:3 WIRE,BLACK	80009	352-0161-00
	352-0161-02			4	. CONN BODY,PL,EL:3 WIRE RED	80009	352-0161-02
	352-0161-03	B020000	B079999	9	. CONN BODY,PL,EL:3 WIRE ORANGE	80009	352-0161-03
	352-0161-03	B080000		8	. CONN BODY,PL,EL:3 WIRE ORANGE	80009	352-0161-03
	352-0161-04			2	. CONN BODY,PL,EL:3 WIRE YELLOW	80009	352-0161-04
	352-0161-05			2	. CONN BODY,PL,EL:3 WIRE GREEN	80009	352-0161-05
	352-0161-06			2	. CONN BODY,PL,EL:3 WIRE BLUE	80009	352-0161-06
	352-0161-07			2	. CONN BODY,PL,EL:3 WIRE VIOLET	80009	352-0161-07

Fig. & Index No.	Tektronix Part No.	Serial/Model No. Eff	Dscont	Qty	1 2 3 4 5 Name & Description	Mfr Code	Mfr Part Number
1-	352-0161-08			2	. CONN BODY,PL,EL:3 WIRE GRAY	80009	352-0161-08
	352-0161-09			2	. CONN BODY,PL,EL:3 WIRE WHITE	80009	352-0161-09
	352-0162-01			2	. CONN BODY,PL,EL:4 WIRE BROWN	80009	352-0162-01
	352-0162-02			2	. CONN BODY,PL,EL:4 WIRE RED	80009	352-0162-02
	352-0162-06			4	. HLDR,TERM CONN:4 WIRE,BLUE	80009	352-0162-06
	352-0162-09			2	. CONN BODY,PL,EL:4 WIRE WHITE	80009	352-0162-09
-181	352-0163-00	B020000	B079999	2	. CONN BODY,PL,EL:5 WIRE BLACK	80009	352-0163-00
	352-0163-00	B080000	B100807	3	. CONN BODY,PL,EL:5 WIRE BLACK	80009	352-0163-00
	352-0163-00	B100808		1	. CONN BODY,PL,EL:5 WIRE BLACK	80009	352-0163-00
	352-0163-04			2	. CONN BODY,PL,EL:5 WIRE YELLOW	80009	352-0163-04
	352-0163-05	B020000	B100807X	1	. CONN BODY,PL,EL:5 WIRE GREEN	80009	352-0163-05
	352-0164-00	XB080000	B100807X	1	. CONN BODY,PL,EL:6 WIRE BLACK	80009	352-0164-00
	352-0166-00			1	. CONN BODY,PL,EL:8 WIRE BLACK	80009	352-0166-00
	352-0168-02			2	. CONN BODY,PL,EL:10 WIRE RED	80009	352-0168-02
	352-0201-00			2	. CONN BODY,PL,EL:5 WIRE BLACK	80009	352-0201-00
	131-0707-00	B020000	B079999	218	. CONNECTOR,TERM:22-26 AWG,BRS& CU BE GOLD	22526	47439
	131-0707-00	B080000	B100807	221	. CONNECTOR,TERM:22-26 AWG,BRS& CU BE GOLD	22526	47439
	131-0707-00	B100808		185	. CONNECTOR,TERM:22-26 AWG,BRS& CU BE GOLD	22526	47439
-182	210-0774-00			3	. EYELET,METALLIC:0.152 OD X 0.245 INCH L,BRS	80009	210-0774-00
-183	210-0775-00			3	. EYELET,METALLIC:0.126 OD X 0.23 INCH L,BRS	80009	210-0775-00
-184	006-0531-00			1	STRAP,TIEDOWN,E:BLUE PLASTIC BEADED	24618	700-3688
	179-2397-00			1	WIRING HARNESS:CHASSIS	80009	179-2397-00
	131-0707-00			96	. CONNECTOR,TERM:22-26 AWG,BRS& CU BE GOLD	22526	47439
	352-0161-05			2	. CONN BODY,PL,EL:3 WIRE GREEN	80009	352-0161-05
	352-0161-08			2	. CONN BODY,PL,EL:3 WIRE GRAY	80009	352-0161-08
	352-0162-00			2	. HLDR,TERM CONN:4 WIRE BLACK	80009	352-0162-00
	352-0162-01			2	. CONN BODY,PL,EL:4 WIRE BROWN	80009	352-0162-01
	352-0162-04			2	. CONN BODY,PL,EL:4 WIRE YELLOW	80009	352-0162-04
	352-0162-08			2	. CONN BODY,PL,EL:4 WIRE GRAY	80009	352-0162-08
-185	352-0164-00			2	. CONN BODY,PL,EL:6 WIRE BLACK	80009	352-0164-00
	352-0164-03			2	. CONN BODY,PL,EL:6 WIRE ORANGE	80009	352-0164-03
	352-0166-03			2	. CONN BODY,PL,EL:8 WIRE ORANGE	80009	352-0166-03
	352-0169-02			2	. CONN BODY,PL,EL:2 WIRE RED	80009	352-0169-00
	352-0169-03			2	. CONN BODY,PL,EL:2 WIRE ORANGE	80009	352-0169-03
	352-0169-08			2	. CONN BODY,PL,EL:2 WIRE GRAY	80009	352-0169-08
	198-4210-00	XB080000		1	WIRE SET,ELEC:	80009	198-4210-00
	131-0707-00	XB080000		11	. CONNECTOR,TERM:22-26 AWG,BRS& CU BE GOLD	22526	47439
	175-0829-00	XB080000		FT	. WIRE,ELECTRICAL:6 WIRE RIBBON	08261	SS-0626-710610C
	352-0163-00	XB080000		1	. CONN BODY,PL,EL:5 WIRE BLACK	80009	352-0163-00
	352-0164-00	XB080000		1	. CONN BODY,PL,EL:6 WIRE BLACK	80009	352-0164-00
	131-2084-00	XB080000		5	. TERM,QUICK DISC:26 AWG,COPPERNICKEL	00779	5250-207-2
	175-4068-00	XB100808		1	CA ASSY,SP,ELEC:3,26 AWG,4.0 L,RIBBON	80009	175-4068-00
	175-4543-00	XB100808		1	CA ASSY,SP,ELEC:26 AWG,7.0 L,RIBBON	80009	175-4543-00
	175-5565-00	XB100808		1	CA ASSY,SP,ELEC:5,26 AWG,6.0 L,RIBBON	80009	175-5565-00
	175-6177-00	XB100808		1	CA ASSY,SP,ELEC:2,26 AWG,3.0 L,RIBBON	80009	175-6177-00
	175-6178-00	XB100808		1	CA ASSY,SP,ELEC:2,26 AWG,4.0 L,RIBBON	80009	175-6178-00
	175-6179-00	XB100808		1	CA ASSY,SP,ELEC:2,26 AWG,7.0 L,RIBBON	80009	17-6179-00
	175-6180-00	XB100808		1	CA ASSY,SP,ELEC:2,26 AWG,7.0 L,RIBBON	80009	175-6180-00
	175-6181-00	XB100808		1	CA ASSY,SP,ELEC:5,26 AWG,7.0 L,RIBBON	80009	175-6181-00
	175-6182-00	XB100808		1	CA ASSY,SP,ELEC:5,26 AWG,6.0 L,RIBBON	80009	175-6182-00
	175-6360-00	XB100808		1	CABLE ASSY,RF:6.26 AWG,3.0 L,RIBBON	80009	175-6360-00
	175-7207-00	XB100808		1	CABLE ASSY,RF:50 OHM COAX,4.25 L,9-07	80009	175-7207-00
	195-7321-00	XB100808		1	LEAD,ELECTRICAL:26 AWG,3.0 L,9-1	80009	195-7321-00
	195-7322-00	XB100808		1	LEAD,ELECTRICAL:26 AWG,2.5 L,9-1	80009	195-7322-00
	348-0503-00	XB100808		AR	SHLD,GSKT,ELEC:KNITTED MESH,0.25 X 0.375	53217	20-40130

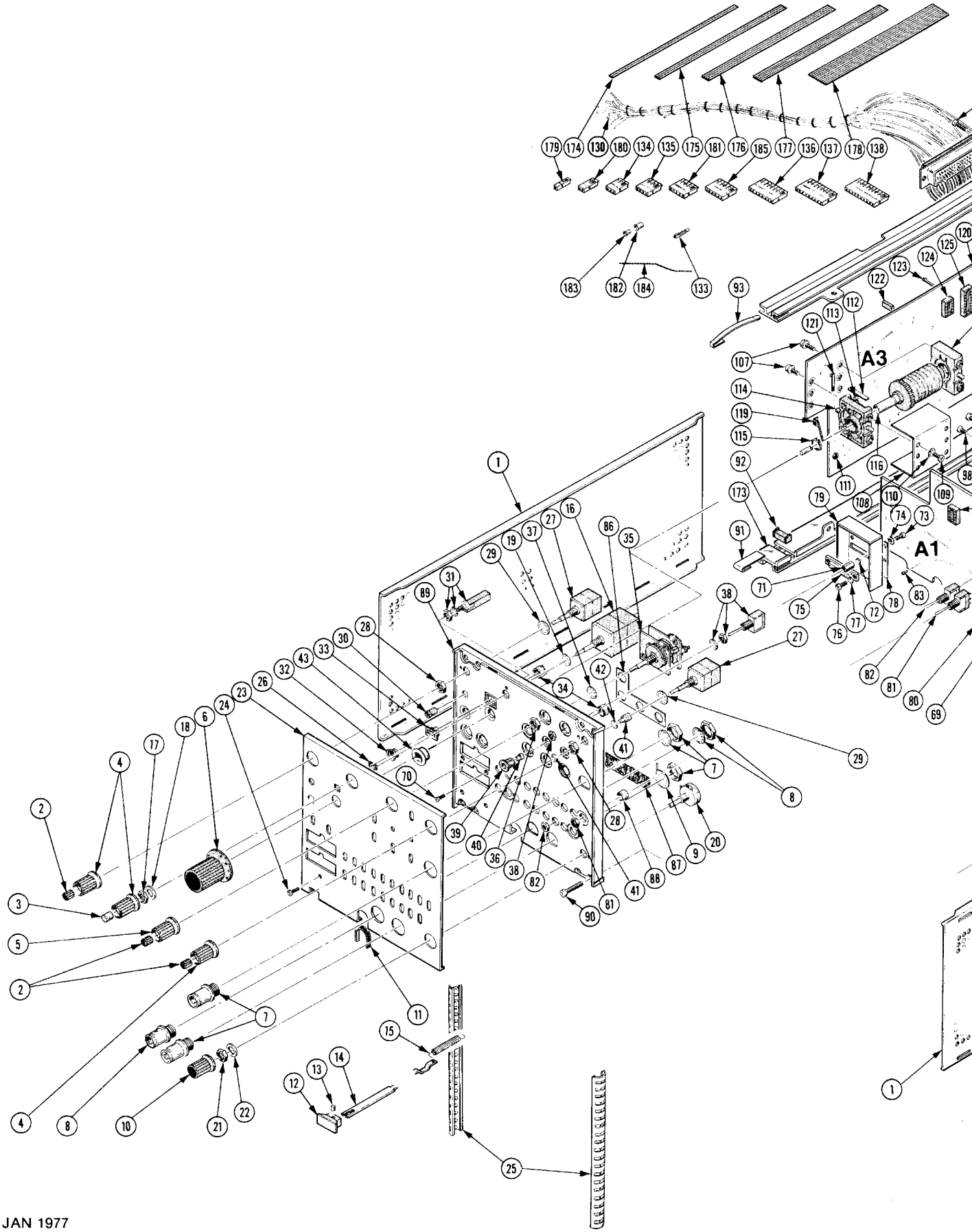

REV. A JAN 1977

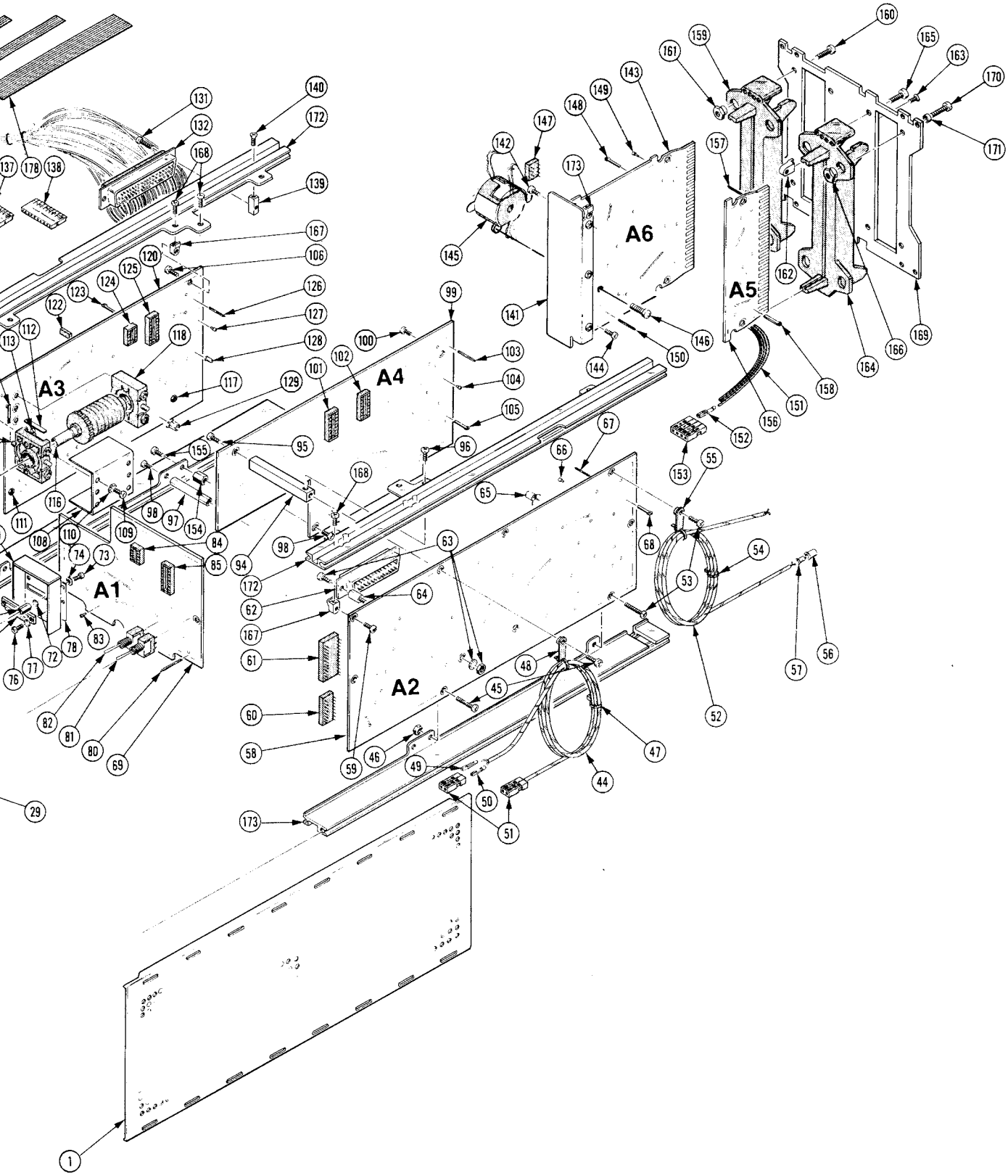
A1
A2
A3
A4
A5
A6

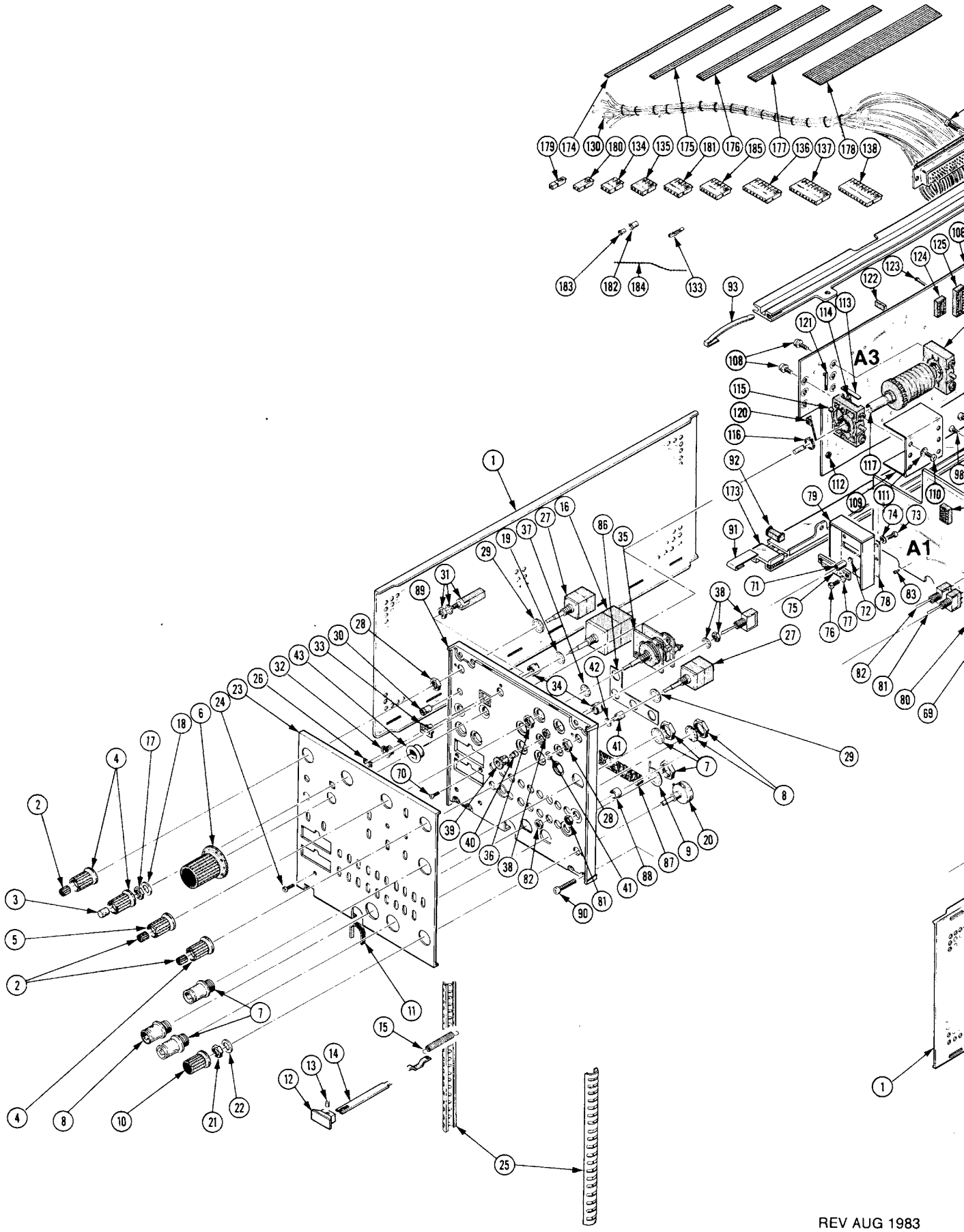

REV AUG 1983

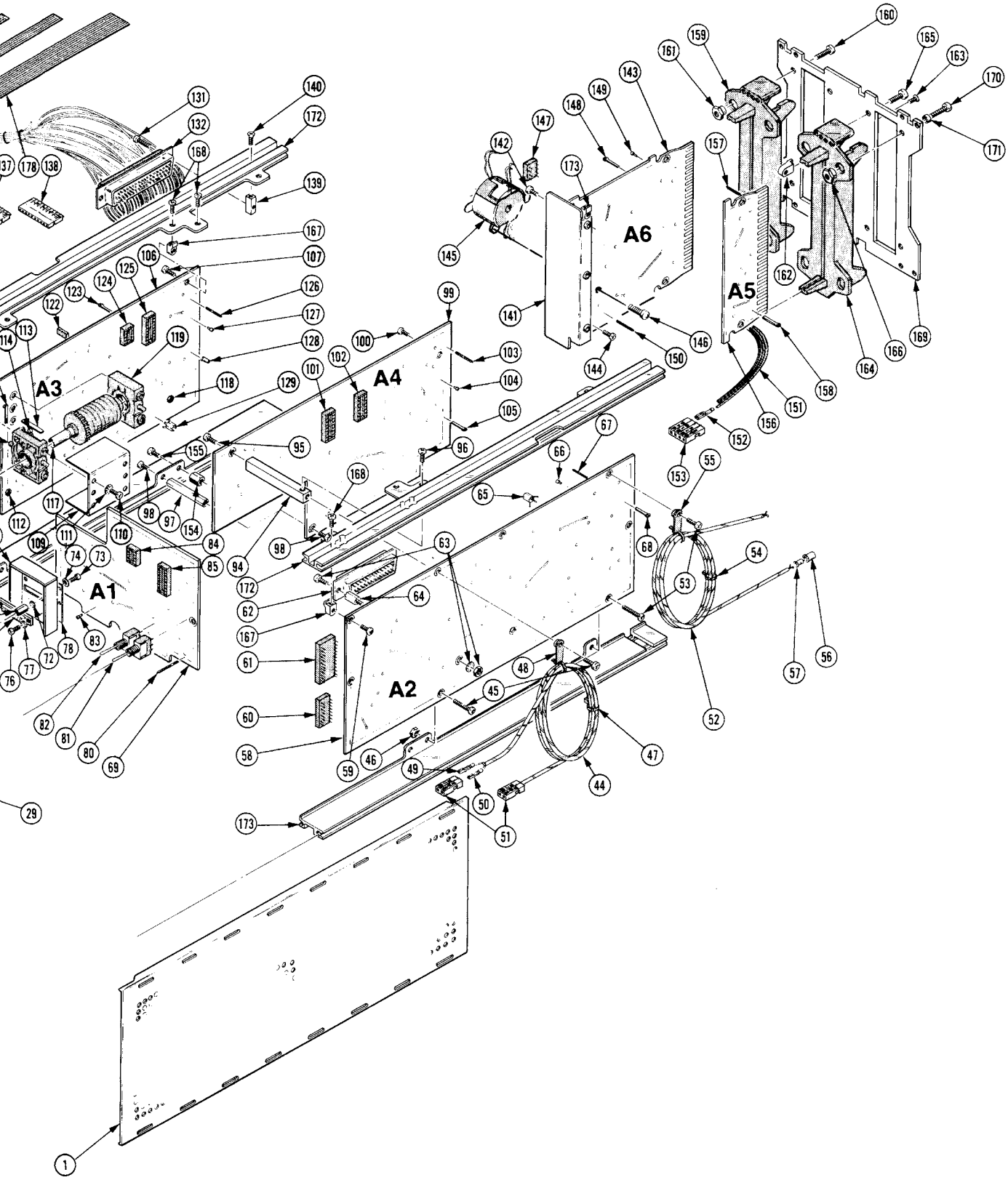
A1
A2
A3
A4
A5
A6

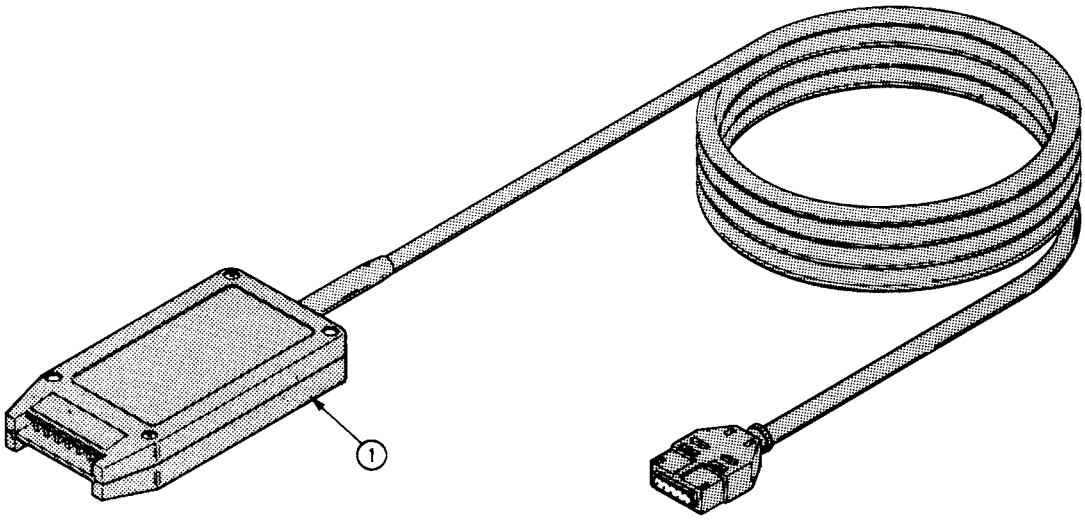

Fig. & Index No.	Tektronix Part No.	Serial/Model No. Eff	Dscont	Qty	1 2 3 4 5	Name & Description	Mfr Code	Mfr Part Number
-1	010-6451-03			2		PROBE,DIGITAL:P6451,MULTI LEAD,W/ACCESS	80009	010-6451-03
	070-2205-01			1		MANUAL,TECH:OPERATORS	80009	070-2205-01
	070-2206-02			1		MANUAL,TECH:INSTRUCTION	80009	070-2206-02

Fig. & Index No.	Tektronix Part No.	Serial/Model No. Eff	Dscont	Qty	1 2 3 4 5 Name & Description	Mfr Code	Mfr Part Number
	010-6451-01			2	LEAD,TEST:MULTI LEAD,W/ACCESS	80009	010-6451-01
	070-2205-01	B020000	B086084	1	MANUAL,TECH:OPERATORS	80009	070-2205-01
	070-2789-00	B086085		1	MANUAL,TECH:OPERATORS	80009	070-2789-00
	070-2206-02			1	MANUAL,TECH:INSTRUCTION	80009	070-2206-02

MANUAL CHANGE INFORMATION

At Tektronix, we continually strive to keep up with latest electronic developments by adding circuit and component improvements to our instruments as soon as they are developed and tested.

Sometimes, due to printing and shipping requirements, we can't get these changes immediately into printed manuals. Hence, your manual may contain new change information on following pages.

A single change may affect several sections. Since the change information sheets are carried in the manual until all changes are permanently entered, some duplication may occur. If no such change pages appear following this page, your manual is correct as printed.

SERVICE NOTE

Because of the universal parts procurement problem, some electrical parts in your instrument may be different from those described in the Replaceable Electrical Parts List. The parts used will in no way alter or compromise the performance or reliability of this instrument. They are installed when necessary to ensure prompt delivery to the customer. Order replacement parts from the Replaceable Electrical Parts List.

CALIBRATION TEST EQUIPMENT REPLACEMENT

Calibration Test Equipment Chart

This chart compares TM 500 product performance to that of older Tektronix equipment. Only those characteristics where significant specification differences occur, are listed. In some cases the new instrument may not be a total functional replacement. Additional support instrumentation may be needed or a change in calibration procedure may be necessary.

Comparison of Main Characteristics

DM 501 replaces 7D13		
PG 501 replaces 107	PG 501 - Risetime less than 3.5 ns into 50 Ω.	107 - Risetime less than 3.0 ns into 50 Ω.
108	PG 501 - 5 V output pulse; 3.5 ns Risetime.	108 - 10 V output pulse; 1 ns Risetime.
111	PG 501 - Risetime less than 3.5 ns; 8 ns Pretrigger pulse delay.	111 - Risetime 0.5 ns; 30 to 250 ns Pretrigger Pulse delay.
114	PG 501 - ±5 V output.	114 - ±10 V output. Short proof output.
115	PG 501 - Does not have Paired, Burst, Gated, or Delayed pulse mode; ±5 V dc Offset. Has ±5 V output.	115 - Paired, Burst, Gated, and Delayed pulse mode; ±10 V output. Short-proof output.
PG 502 replaces 107		
108	PG 502 - 5 V output	108 - 10 V output.
111	PG 502 - Risetime less than 1 ns; 10 ns Pretrigger pulse delay.	111 - Risetime 0.5 ns; 30 to 250 ns Pretrigger pulse delay.
114	PG 502 - ±5 V output	114 - ±10 V output. Short proof output.
115	PG 502 - Does not have Paired, Burst, Gated, Delayed & Undelayed pulse mode; Has ±5 V output.	115 - Paired, Burst, Gated, Delayed & Undelayed pulse mode; ±10 V output. Short-proof output.
2101	PG 502 - Does not have Paired or Delayed pulse. Has ±5 V output.	2101 - Paired and Delayed pulse; 10 V output.
PG 506 replaces 106	PG 506 - Positive-going trigger output signal at least 1 V; High Amplitude output, 60 V.	106 - Positive and Negative-going trigger output signal, 50 ns and 1 V; High Amplitude output, 100 V.
067-0502-01	PG 506 - Does not have chopped feature.	0502-01 - Comparator output can be alternately chopped to a reference voltage.
SG 503 replaces 190, 190A, 190B	SG 503 - Amplitude range 5 mV to 5.5 V p-p.	190B - Amplitude range 40 mV to 10 V p-p.
191	SG 503 - Frequency range 250 kHz to 250 MHz.	191 - Frequency range 350 kHz to 100 MHz.
067-0532-01	SG 503 - Frequency range 250 kHz to 250 MHz.	0532-01 - Frequency range 65 MHz to 500 MHz.
TG 501 replaces 180, 180A	TG 501 - Marker outputs, 5 sec to 1 ns. Sinewave available at 5, 2, and 1 ns. Trigger output - slaved to marker output from 5 sec through 100 ns. One time-mark can be generated at a time.	180A - Marker outputs, 5 sec to 1 μs. Sinewave available at 20, 10, and 2 ns. Trigger pulses 1, 10, 100 Hz; 1, 10, and 100 kHz. Multiple time-marks can be generated simultaneously.
181	TG 501 - Marker outputs, 5 sec to 1 ns. Sinewave available at 5, 2, and 1 ns.	181 - Marker outputs, 1, 10, 100, 1000, and 10,000 μs, plus 10 ns sinewave.
184	TG 501 - Marker outputs, 5 sec to 1 ns. Sinewave available at 5, 2, and 1 ns. Trigger output - slaved to marker output from 5 sec through 100 ns. One time-mark can be generated at a time.	184 - Marker outputs, 5 sec to 2 ns. Sinewave available at 50, 20, 10, 5, and 2 ns. Separate trigger pulses of 1 and .1 sec; 10, 1, and .1 ms; 10 and 1 μs. Marker amplifier provides positive or negative time marks of 25 V min. Marker intervals of 1 and .1 sec; 10, 1, and .1 ms; 10 and 1 μs.
2901	TG 501 - Marker outputs, 5 sec to 1 ns. Sinewave available at 5, 2, and 1 ns. Trigger output - slaved to marker output from 5 sec through 100 ns. One time-mark can be generated at a time.	2901 - Marker outputs, 5 sec to 0.1 μs. Sinewave available to 50, 10, and 5 ns. Separate trigger pulses, from 5 sec to 0.1 μs. Multiple time-marks can be generated simultaneously.

NOTE: All TM 500 generator outputs are short-proof. All TM 500 plug-in instruments require TM 500-Series Power Module.

INSTRUCTION MANUAL

MODIFICATION INSERT

CURSOR IMPROVEMENT

Type 7D01 SN B010100 - B059999

Installed in SN_____Date_____

This modification insert is provided to supplement the Instruction Manual for the above listed products. The information given in this insert supersedes that given in the Manual.

Copyright © 1977 by Tektronix, Inc., Beaverton, Oregon. Printed in the United States of America. All rights reserved. Contents of this insert may not be reproduced in any form without the permission of the copyright owner.

GENERAL INFORMATION

This modification kit provides parts and instructions to eliminate noise problems that cause the cursor detector - counter circuit to jump forward, go backwards or not to move at all.

ELECTRICAL PARTS LIST

Ckt. No.	Part Number	Description
	CAPACITORS	
C1341	283-0341-00	.047μF 10% 100V cer.
C1345	283-0341-00	.047μF 10% 100V cer.
C1351	283-0341-00	.047μF 10% 100V cer.
C1355	283-0341-00	.047μF 10% 100V cer.
	RESISTORS	
R1339	315-0103-00	10k 5% 0.25W
R1340	315-0103-00	10k 5% 0.25W
R1349	315-0103-00	10k 5% 0.25W
R1350	315-0103-00	10k 5% 0.25W

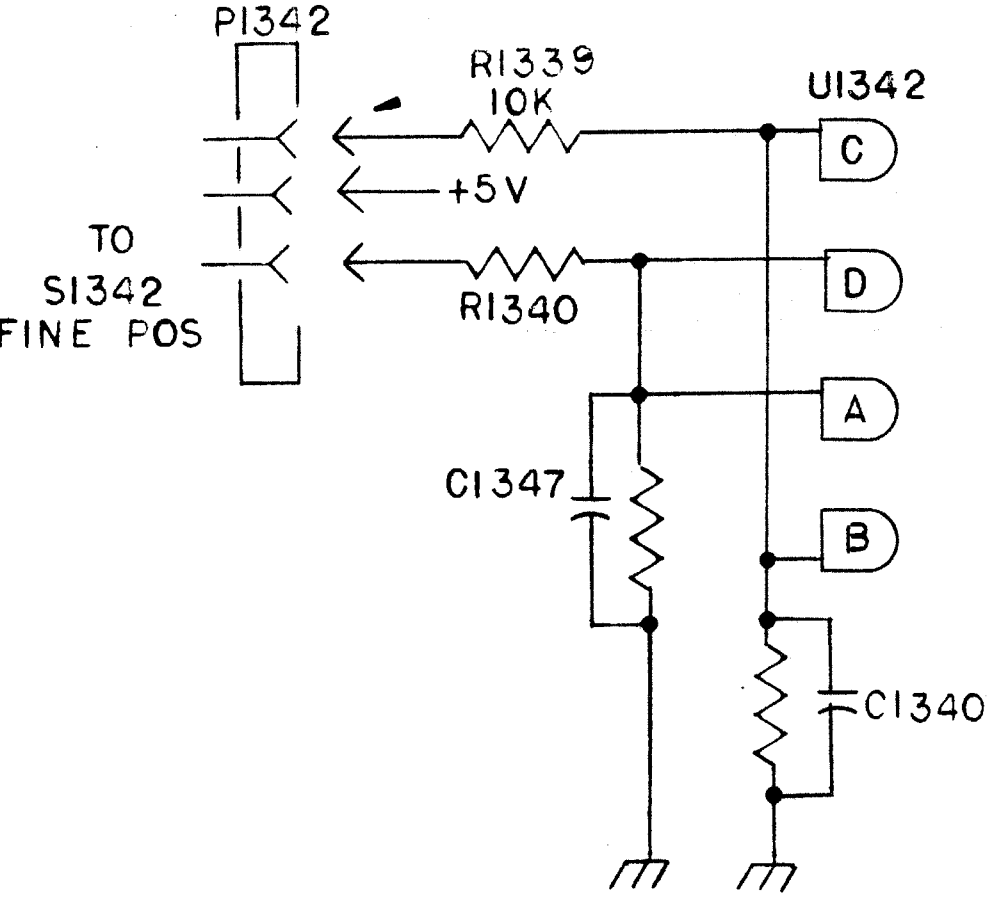

PARTIAL CURSOR SCHEMATIC ⟨8⟩

Course Input U1352 was modified in a similar manner.

product modification

040-0843-00

M32234

Type 7D01

CURSOR IMPROVEMENT

For TEKTRONIX® 7D01 Logic Analyzers

Serial Numbers B010100 - B059999

This modification kit provides parts and instructions to eliminate noise problems that cause the cursor detector - counter circuit to jump forward, go backwards or not to move at all.

The problem is corrected by adding filters to the inputs of the cursor detector - counter circuit.

© 1977, 1978, Tektronix, Inc.
All Rights Reserved

1-24-78
Supersedes: 11-23-77

TEKTRONIX, SCOPE-MOBILE and are registered trademarks of Tektronix, Inc.

PARTS INCLUDED IN MODIFICATION KIT

Ckt. No.	Quantity	Part Number	Description
	2 ea	198-3877-00	Wire kit, consisting of: Wire, ribbon 4 1/2 inches, w/3 conductor #26 stranded 175-0826-00 prepared as follows: one end w/3 131-0707-00 connectors in a 352-0161-02 holder, other end as follows: cut off the white-brown and the white-orange wires one inch shorter that the white-red wire. Solder one lead of a 0.25W 5% 10kΩ resistor* (cut leads to 5/8 inch connector end and 1/4 inch other end) to the white-brown wire and solder one lead of another 0.25W 5% 10kΩ resistor to the white-orange wire, cover splices and resistors with one inch pieces of shrink tubing (162-0531-00) and put other lead of resistors and the white-red wire in 131-0707-00 connectors and a 352-0161-02 holder.
C1341 C1345 C1351 C1355	4 ea	283-0341-00	Capacitor, .047μF 10%

INSTRUCTIONS:

NOTE: It is not necessary to remove the A4 Cursor circuit board to add the .047μF capacitors.

Make the following change on the front of the A4 Cursor circuit board:

( ) 1. Install C1341 and C1345 in parallel with R1341 and R1342, respectively.

*R1339, R1340, R1349 and R1350 are 10k 0.25W resistors pn 315-0103-00.

INSTRUCTIONS: (continued)

To facilitate installation of C1341 and C1345, turn the instrument upside down, move the cable out of the way and solder the capacitors to leads of R1341 and R1342 farthest from the edge of the circuit board. Then solder the ground leads of the two capacitors to the outside lead of R1341 and R1342.

( ) 2. Install C1351 and C1355 in parallel with R1351 and R1352, respectively.

Install C1357 and C1355 in the same manner as C1341 and C1345 except turn the instrument right side up.

( ) 3. Replace the three wire ribbon cables that connect S1342 (FINE CURSOR Switch) to P1342 and S1352 (COURSE CURSOR Switch) to P1352 respectively with the three wire ribbon cables w/resistors from the kit. Install with the resistor ends connected to P1342 and P1352.
TOWARD SWITCHES

For future reference, fasten the Instruction Manual Modification Insert in your Instruction Manual.

JT:plc

Tektronix
COMMITTED TO EXCELLENCE

MANUAL CHANGE INFORMATION

Date: 11-16-82 Change Reference: C4/1182

Product: 7D01 Logic Analyzer (Serial No. B020000 & up) Manual Part No.: 070-2206-02

DESCRIPTION

THIS IS A PAGE REPLACEMENT PACKAGE.

1. Remove the designated pages from your manual and insert the attached pages.

2. Keep this cover sheet in the Change Information section at the back your manual for permanient record.

REPLACEABLE MECHANICAL PARTS

REMOVE THE FOLLOWING PAGE AND REPLACE IT WITH THE ENCLOSED PAGE:

Fig. 1 EXPLODED

000-2775-00D

Tektronix®
COMMITTED TO EXCELLENCE

MANUAL CHANGE INFORMATION

Date: 4-22-81 Change Reference: C1/481

Product: 7D01 LOGIC ANALYZER Manual Part No.: 070-2206-02

DESCRIPTION

TEXT ADDITION

SECTION 1 GENERAL INFORMATION

p. 1-1 **INSTALLATION**

CHANGE the first paragraph to read:

The 7D01 is calibrated and ready to use when received. It is designed to occupy a vertical and horizontal plug-in compartment in all 7000-series mainframes with readout except the 7104, which may suffer crt damage that will not be covered by the instrument warranty, and the Digital Processing Oscilloscope (DPO), which will not digitize the 7D01 outputs. There are some....

Scans
By
Artek Media

Artek Media
1042 Plummer Cir. SW
Rochester, MN 55902

www.artekmedia.com

"High resolution scans of obsolete technical manuals"

If your looking for a quality scanned technical manual in PDF format please visit our WEB site at www.artekmedia.com or drop us an email at manuals@artekmedia.com and we will be happy to email you a current list of the manuals we have available.

If you don't see the manual you need on the list drop us a line anyway we may still be able to point you to other sources. If you have an existing manual you would like scanned please write for details, This can often be done very reasonably in consideration for adding your manual to our library.

Typically the scans in our manuals are done as follows;

1) Typed text pages are typically scanned in black and white at 300 dpi.
2) Photo pages are typically scanned in gray scale mode at 600 dpi
3) Schematic diagram pages are typically scanned in black and white at 600 dpi unless the original manual had colored high lighting (as is the case for some 70's vintage Tektronix manuals).

If you purchased this manual from us (typically through our Ebay name of ArtekMedia) thank you very much. If you received this from a well-meaning "friend" for free we would appreciate your treating this much like you would "share ware". By that we mean a donation of at least $5-10 per manual is appreciated in recognition of the time (a manual can take as much as 40 hours to reproduce, book, link etc.), energy and quality of effort that went into preserving this manual. Donations via PayPal go to: manuals@artekmedia.com or can be mailed to us the address above.

Thanks

Dave & Lynn Henderson
Artek Media